CROW RIVER HEIGHTS WEST

FUTURE ADDITIONS

HANOVER, MINNESOTA

PRELIMINARY PLANS FOR:
SITE GRADING, SANITARY SEWER, WATERMAIN,
STORM SEWER AND STREET CONSTRUCTION

VICINITY MAP

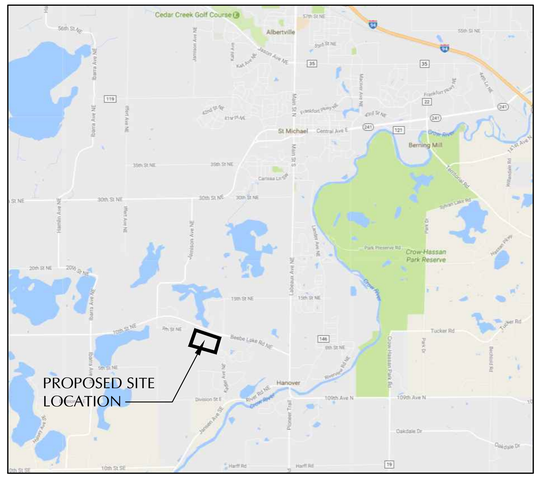

WARNING:

THE CONTRACTOR SHALL BE RESPONSIBLE FOR CALLING FOR LOCATIONS OF ALL EXISTING UTILITIES. THEY SHALL COOPERATE WITH ALL UTILITY COMPANIES IN MAINTAINING THEIR SERVICE AND / OR RELOCATION OF LINES.

THE CONTRACTOR SHALL CONTACT GOPHER STATE ONE CALL AT 651-454-0002 AT LEAST 48 HOURS IN ADVANCE FOR THE LOCATIONS OF ALL UNDERGROUND WIRES, CABLES, CONDUITS, PIPES, MANHOLES, VALVES OR OTHER BURIED STRUCTURES BEFORE DIGGING. THE CONTRACTOR SHALL REPAIR OR REPLACE THE ABOVE WHEN DAMAGED DURING CONSTRUCTION AT NO COST TO THE OWNER.

DEVELOPER

BACKES DEVELOPMENT, LLC
11413 ASHBURY CIRCLE N.
CHAMPLIN, MN 55316

DENNIS BACKES
TEL: 612.369.7750
FAX: 612.566.1525

CALL BEFORE YOU DIG!
Gopher State One Call
TWIN CITY AREA: 651-454-0002
TOLL FREE: 1-800-252-1166

BENCHMARKS

TOP NUT HYDRANT AT END OF JASMINE CT
CUL-DE-SAC, Elevation = 975.48 feet (NGVD1929).

CROW RIVER HEIGHTS WEST FUTURE ADD.
HANOVER, MN

BACKES COMPANIES
11413 ASHBURY CIRCLE N.
CHAMPLIN, MN 55316
PHONE: (612) 369-7750
FAX (612) 566-1525

LOUCKS
PLANNING
CIVIL ENGINEERING
LAND SURVEYING
LANDSCAPE ARCHITECTURE
ENVIRONMENTAL
7200 Hemlock Lane, Suite 300
Maple Grove, MN 55369
763.424.5505
www.loucksinc.com

CADD QUALIFICATION

CADD files prepared by the Consultant for this project are instruments of the Consultant professional services for use solely with respect to this project. These CADD files shall not be used on other projects, for additions to this project, or for completion of this project by others without written approval by the Consultant. Upon request, the Consultant may provide, at its permitted cost, copies of the CADD drawing files for information and reference only. All intentional or unintentional revisions, additions, or deletions to these CADD files shall be made at the full risk of that party making such revisions, additions or deletions and that party shall hold harmless and indemnify the Consultant from any & all responsibilities, claims, and liabilities.

SUBMITTAL/REVISIONS

04/20/18	CITY SUBMITTAL
05/24/18	CITY COMMENTS

PROFESSIONAL SIGNATURE

I hereby certify that this plan, specification, or report was prepared by me or under my direct supervision and that I am a duly Licensed Professional Engineer under the laws of the State of Minnesota.

PRELIMINARY

Licensed Name: Todd W. Mullouth - PE
Date: License No. 20383

QUALITY CONTROL

Loucks Project No.	16101A
Project Lead	TWM
Drawn By	ZHW
Checked By	TWM
Review Date	05/24/18

SHEET INDEX

C0-1	COVER SHEET
C1-1	EXISTING CONDITIONS
C1-2	PRELIMINARY PLAT
C2-0 - C2-2	SITE PLAN
C3-0 - C3-2	GRADING PLAN
C3-3 - C3-5	SWPPP PLAN & NOTES
C4-0 - C4-2	UTILITY PLAN
C8-1 - C8-2	DETAILS
L0-1 - L0-3	TREE PRESERVATION
L0-4	TREE INVENTORY
L1-1 - L1-2	LANDSCAPE PLANS
L2-1	LANDSCAPE DETAILS

COVER SHEET
C0-1

Plotted: 05 /25 / 2018 11:51 AM W:\2010\16101A\CADD DATA\CIVIL_dwg Sheet Files\C0-1 COVER SHEET

N

0 100 200
SCALE IN FEET

SURVEY LEGEND

AS	ASH	CATCH BASIN	STORM SEWER
AP	APPLE	STORM MANHOLE	SANITARY SEWER
BA	BASSWOOD	SANITARY MANHOLE	WATERMAIN
BI	BIRCH	WATER MANHOLE	SANITARY SEWER SERVICE
BO	BOXELDER	HYDRANT	WATER SERVICE
BU	BUCKEYE	GATE VALVE	CULVERT
BS	BUSH	POWER POLE	UNDERGROUND CABLE TV
CA	CATULPA	LIGHT POLE	UNDERGROUND ELECTRIC
CE	CEDAR	YARD LIGHT	UNDERGROUND FIBER OPTIC
CO	COTTONWOOD	GUY WIRE	UNDERGROUND GAS
DE	DEAD TREE	SIGN	UNDERGROUND TELEPHONE
EL	ELM	SPOT ELEVATION	UNDERGROUND UTILITY
FR	MISC FRUIT	A/C UNIT	OVERHEAD UTILITY
FI	FIR	CABLE TV PEDESTAL	UNDERGROUND TRAFFIC
HA	HACKBERRY	ELECTRIC TRANSFORMER	DRAIN TILE
HI	HICKORY	TELEPHONE PEDESTAL	FORCE MAIN
IR	IRONWOOD	UTILITY PEDESTAL	CHAIN LINK FENCE
LI	LINDEN	ELECTRIC MANHOLE	POST FENCE
LO	LOCUST	GAS VALVE	WOOD FENCE
MA	MAPLE	TELEPHONE MANHOLE	GUARDRAIL
OA	OAK	UTILITY MANHOLE	RETAINING WALL
PA	PALM	ELECTRIC METER	TRAFFIC SIGNAL
PI	PINE	GAS METER	CONCRETE CURB
PO	POPLAR	HAND HOLE	CONCRETE
SP	SPRUCE	ROOF DRAIN	BITUMINOUS
TR	TREE (GEN)	ELECTRIC OUTLET	PAVERS
WA	WALNUT	FIRE CONNECTION	CONTOUR
WI	WILLOW	MAILBOX	RAILROAD TRACKS
TC	TOP OF CURB	FLAG POLE	CONIFEROUS TREE
TW	TOP OF WALL	GUARDPOST	DECIDUOUS TREE
THSD	ELEV @ THRESHOLD	MONITORING WELL	
		POST INDICATOR VALVE	
		SOIL BORING	WETLAND DELINATION KJOLHAUG ENV. 05/17/18

CALL BEFORE YOU DIG!
Gopher State One Call
TWIN CITY AREA: 651-454-0002
TOLL FREE: 1-800-252-1166

WARNING:

THE CONTRACTOR SHALL BE RESPONSIBLE FOR CALLING FOR LOCATIONS OF ALL EXISTING UTILITIES. THEY SHALL COOPERATE WITH ALL UTILITY COMPANIES IN MAINTAINING THEIR SERVICE AND / OR RELOCATION OF LINES.

THE CONTRACTOR SHALL CONTACT GOPHER STATE ONE CALL AT 651-454-0002 AT LEAST 48 HOURS IN ADVANCE FOR THE LOCATIONS OF ALL UNDERGROUND WIRES, CABLES, CONDUITS, PIPES, MANHOLES, VALVES OR OTHER BURIED STRUCTURES BEFORE DIGGING. THE CONTRACTOR SHALL REPAIR OR REPLACE THE ABOVE WHEN DAMAGED DURING CONSTRUCTION AT NO COST TO THE OWNER.

CROW RIVER HEIGHTS WEST FUTURE ADD.

HANOVER, MN

BACKES COMPANIES
11413 ASHBURY CIRCLE N.
CHAMPLIN, MN 55316
PHONE: (612) 369-7750
FAX (612) 566-1525

LOUCKS
PLANNING
CIVIL ENGINEERING
LAND SURVEYING
LANDSCAPE ARCHITECTURE
ENVIRONMENTAL
7200 Hemlock Lane, Suite 300
Maple Grove, MN 55369
763.424.5505
www.loucksinc.com

CADD QUALIFICATION

CADD files prepared by the Consultant for this project are instruments of the Consultant professional services for use solely with respect to this project. These CADD files shall not be used on other projects, for additions to this project, or for completion of this project by others without written approval by the Consultant. With the Consultant's approval, others may be permitted to obtain copies of the CADD drawing files for information and reference only. All intentional or unintentional revisions, additions, or deletions to these CADD files shall be made at the full risk of that party making such revisions, additions or deletions and that party shall hold harmless and indemnify the Consultant from any & all responsibilities, claims, and liabilities.

SUBMITTAL/REVISIONS

04/20/18	CITY SUBMITTAL
05/24/18	CITY COMMENTS

PROFESSIONAL SIGNATURE

I hereby certify that this plan, specification or report was prepared by me or under my direct supervision and that I am a duly Licensed Professional Engineer under the laws of the State of Minnesota.

PRELIMINARY

Todd W. McLouth - PE
License No. 20383
Date

QUALITY CONTROL

Loucks Project No.	16101A
Project Lead	TWM
Drawn By	ZHW
Checked By	TWM
Review Date	05/24/18

SHEET INDEX

C0-1	COVER SHEET
C1-1	EXISTING CONDITIONS
C1-2	PRELIMINARY PLAT
C2-0 - C2-2	SITE PLAN
C3-0 - C3-2	GRADING PLAN
C3-3 - C3-5	SWPPP PLAN & NOTES
C4-0 - C4-2	UTILITY PLAN
C8-1 - C8-2	DETAILS
L0-1 - L0-3	TREE PRESERVATION
L0-4	TREE INVENTORY
L1-1 - L1-2	LANDSCAPE PLANS
L2-1	LANDSCAPE DETAILS

EXISTING CONDITIONS

C1-0

Preliminary Plat: CROW RIVER HEIGHTS WEST FUTURE ADDITIONS

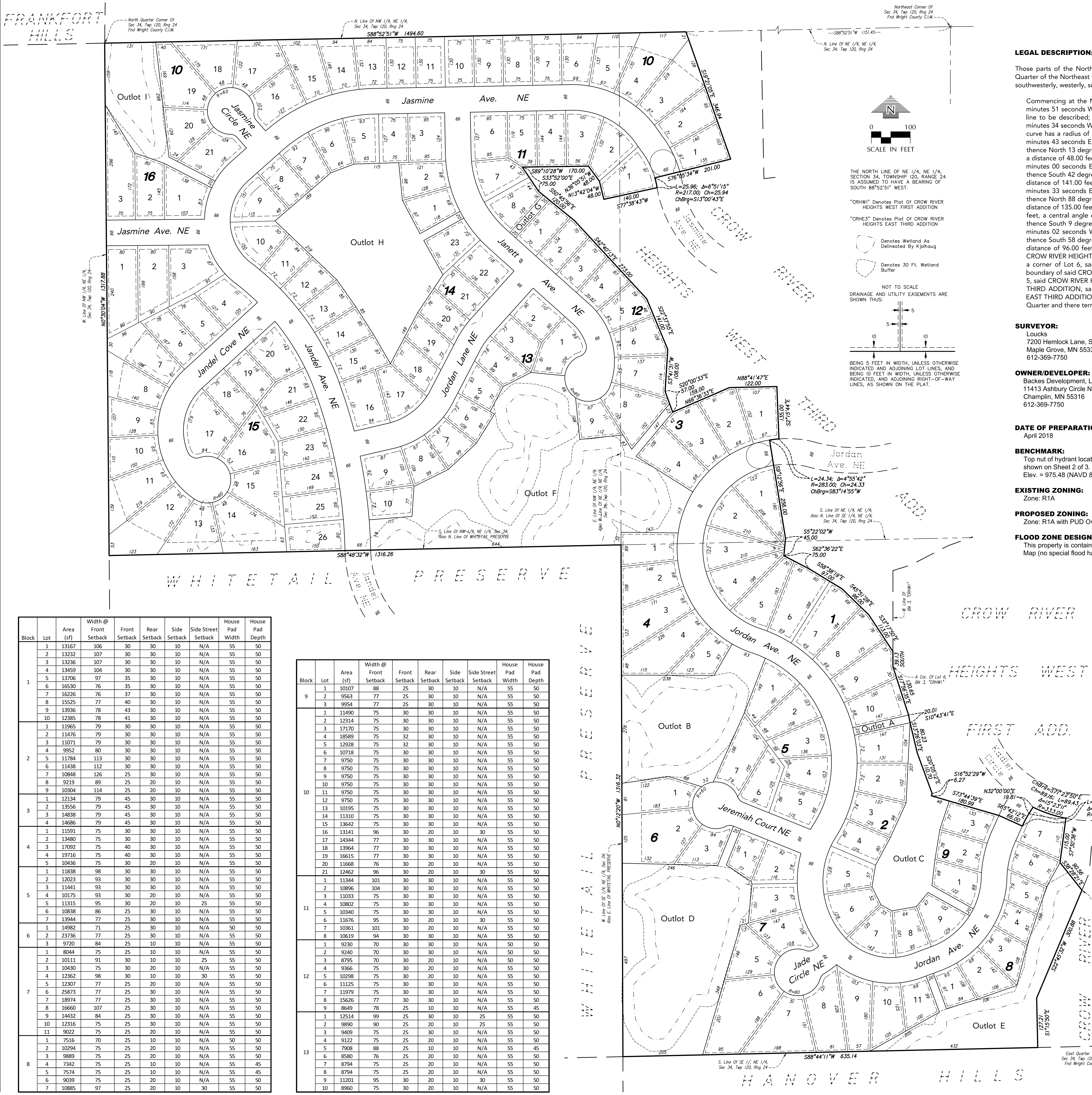

PRELIMINARY PLAT GENERAL NOTES

LEGAL DESCRIPTION:

Those parts of the Northeast Quarter of the Northeast Quarter, the Northwest Quarter of the Northeast Quarter, and the Southeast Quarter of the Northeast Quarter of Section 34, Township 120 North, Range 24 West, Wright County, Minnesota, lying westerly, northerly, southwesterly, westerly, southwesterly and westerly of the following described line:

Commencing at the Northeast corner of said Northeast Quarter; thence westerly, on an assumed bearing of South 88 degrees 52 minutes 51 seconds West, along the north line of said Northeast Quarter, a distance of 1151.45 feet to the point of beginning of the line to be described; thence South 19 degrees 21 minutes 05 seconds East a distance of 346.94 feet; thence South 76 degree 05 minutes 34 seconds West a distance of 201.00 feet; thence southerly 25.96 feet along a non-tangential curve concave to the west, said curve has a radius of 217.00 feet, a central angle of 6 degrees 51 minutes 15 seconds, and a chord that bears South 13 degrees 00 minutes 43 seconds East; thence South 77 degrees 38 minutes 43 seconds West, not tangent to said curve a distance of 140.00 feet; thence North 13 degrees 42 minutes 04 seconds West a distance of 48.00 feet; thence North 36 degrees 05 minutes 51 seconds West a distance of 48.00 feet; thence South 89 degrees 10 minutes 28 seconds West a distance of 170.00 feet; thence South 33 degrees 52 minutes 00 seconds East a distance of 75.00 feet; thence South 50 degrees 45 minutes 56 seconds East a distance of 120.00 feet; thence South 42 degrees 40 minutes 13 seconds East a distance of 273.00 feet; thence South 22 degrees 37 minutes 55 seconds East a distance of 141.00 feet; thence South 3 degrees 41 minutes 31 seconds West a distance of 108.00 feet; thence South 20 degrees 00 minutes 33 seconds East a distance of 57.00 feet; thence North 66 degrees 36 minutes 33 seconds East a distance of 159.00 feet; thence North 88 degrees 41 minutes 47 seconds East a distance of 122.00 feet; thence South 2 degrees 15 minutes 44 seconds East a distance of 135.00 feet; thence westerly 24.34 feet along a non-tangential curve concave to the south, said curve has a radius of 283.00 feet, a central angle of 4 degrees 55 minutes 42 seconds, and a chord that bears South 83 degrees 14 minutes 55 seconds West; thence South 9 degrees 12 minutes 56 seconds East, not tangent to said curve a distance of 256.00 feet; thence South 5 degrees 22 minutes 02 seconds West a distance of 45.00 feet; thence South 62 degrees 36 minutes 22 seconds East a distance of 75.00 feet; thence South 58 degrees 38 minutes 19 seconds East a distance of 97.00 feet; thence South 45 degrees 51 minutes 28 seconds East a distance of 96.00 feet; thence South 33 degrees 17 minutes 50 seconds East a distance of 113.00 feet to the west line of Block 3, CROW RIVER HEIGHTS WEST FIRST ADDITION, Wright County, Minnesota; thence on a bearing of SOUTH, a distance of 39.13 feet to a corner of Lot 6, said Block 3; thence southeasterly, northeasterly, easterly, southerly and southeasterly, along the southwesterly boundary of said CROW RIVER HEIGHTS WEST FIRST ADDITION, a distance of 945.55 feet to the most southerly corner of Lot 1, Block 5, said CROW RIVER HEIGHTS WEST FIRST ADDITION, which corner is also on the west line of Block 4, CROW RIVER HEIGHTS EAST THIRD ADDITION, said Wright County; thence southwesterly and southerly, along the westerly line of said CROW RIVER HEIGHTS EAST THIRD ADDITION, and said line extended, a distance of 428.09 feet, to the south line of said Southeast Quarter of the Northeast Quarter and there terminating.

SURVEYOR:
Loucks
7200 Hemlock Lane, Suite 300
Maple Grove, MN 55330
612-369-7750

OWNER/DEVELOPER:
Backes Development, LLC
11413 Ashbury Circle N.
Champlin, MN 55316
612-369-7750

DATE OF PREPARATION:
April 2018

BENCHMARK:
Top nut of hydrant located in cul-de-sac of Jasmine Court as shown on Sheet 2 of 3.
Elev. = 975.48 (NAVD 88)

EXISTING ZONING:
Zone: R1A

PROPOSED ZONING:
Zone: R1A with PUD Overlay

FLOOD ZONE DESIGNATION:
This property is contained in an unprinted Flood Insurance Rate Map (no special flood hazard areas).

AREAS:

Proposed Lots =	1,902,756 SF or	43.68 Acres
Proposed Outlot A =	2,938 SF or	0.07 Acres
Proposed Outlot B =	87,377 SF or	2.00 Acres
Proposed Outlot C =	45,233 SF or	1.04 Acres
Proposed Outlot D =	137,323 SF or	3.15 Acres
Proposed Outlot E =	68,170 SF or	1.56 Acres
Proposed Outlot F =	210,356 SF or	4.83 Acres
Proposed Outlot G =	2,594 SF or	0.06 Acres
Proposed Outlot H =	113,041 SF or	2.60 Acres
Proposed Outlot I =	40,859 SF or	0.94 Acres
Proposed R.O.W. =	524,799 SF or	12.05 Acres
Total Property =	3,135,448 SF or	71.98 Aces

PROPOSED BUILDING SETBACKS:
Front = 25 - 45 Feet Minimum, Varies
Side (Corner) = 25/30 Feet Minimum, Varies
Side (Interior) = 10 Feet
Rear = 10/20/30 Feet Minimum, Varies

PROPOSED LOT DATA:
No. Lots = 159
Minimum Lot Size = 7,342 SF
Average Lot Size = 11,968 SF

WETLANDS:
Wetland Area = 267,156 SF or 6.13 Acres

Block	Lot	Area (sf)	Width @ Front Setback	Front Setback	Rear Setback	Side Setback	Side Street Setback	House Pad Width	House Pad Depth
1	1	13167	106	30	30	10	N/A	55	50
	2	13232	107	30	30	10	N/A	55	50
	3	13236	107	30	30	10	N/A	55	50
	4	13459	104	30	30	10	N/A	55	50
	5	13706	97	35	30	10	N/A	55	50
	6	16530	76	35	30	10	N/A	55	50
	7	16226	76	37	30	10	N/A	55	50
	8	15525	77	40	30	10	N/A	55	50
	9	13936	78	43	30	10	N/A	55	50
	10	12385	78	41	30	10	N/A	55	50
2	1	11965	79	30	30	10	N/A	55	50
	2	11476	79	30	30	10	N/A	55	50
	3	11071	79	30	30	10	N/A	55	50
	4	9952	80	30	30	10	N/A	55	50
	5	11784	113	30	30	10	N/A	55	50
	6	11438	112	30	30	10	N/A	55	50
	7	10848	126	25	30	10	N/A	55	50
	8	9219	89	25	20	10	N/A	55	50
	9	10304	114	25	20	10	N/A	55	50
3	1	12134	79	45	30	10	N/A	55	50
	2	13556	79	45	30	10	N/A	55	50
	3	14838	79	45	30	10	N/A	55	50
	4	14686	79	45	30	10	N/A	55	50
4	1	11591	75	30	30	10	N/A	55	50
	2	13480	75	30	30	10	N/A	55	50
	3	17092	75	40	30	10	N/A	55	50
	4	19716	75	40	30	10	N/A	55	50
	5	10436	75	30	20	10	N/A	55	50
5	1	11838	98	30	30	10	N/A	55	50
	2	12023	93	30	30	10	N/A	55	50
	3	11441	93	30	30	10	N/A	55	50
	4	10175	93	30	20	10	N/A	55	50
	5	11315	95	30	20	10	25	55	50
	6	10838	86	25	30	10	N/A	55	50
	7	13944	77	25	30	10	N/A	55	50
6	1	14982	71	25	30	10	N/A	50	50
	2	23736	77	25	30	10	N/A	55	50
	3	9720	84	25	10	10	N/A	55	50
7	1	8044	75	25	10	10	N/A	55	50
	2	10111	91	30	10	10	25	55	50
	3	10430	75	30	20	10	N/A	55	50
	4	12362	98	30	10	10	30	55	50
	5	12307	77	25	20	10	N/A	55	50
	6	25873	77	25	30	10	N/A	55	50
	7	18974	77	25	30	10	N/A	55	50
	8	16660	107	25	30	10	N/A	55	50
	9	14432	84	25	30	10	N/A	55	50
	10	12316	75	25	30	10	N/A	55	50
	11	9022	75	25	20	10	N/A	55	50
8	1	7516	70	25	10	10	N/A	50	50
	2	10294	75	25	20	10	N/A	55	50
	3	9889	75	25	20	10	N/A	55	50
	4	7342	75	25	10	10	N/A	55	45
	5	7574	75	25	10	10	N/A	55	45
	6	9039	75	25	20	10	N/A	55	50
	7	10885	97	25	20	10	30	55	50

Block	Lot	Area (sf)	Width @ Front Setback	Front Setback	Rear Setback	Side Setback	Side Street Setback	House Pad Width	House Pad Depth
9	1	10107	88	25	30	10	N/A	55	50
	2	9563	77	25	30	10	N/A	55	50
	3	9954	77	25	30	10	N/A	55	50
10	1	11490	75	30	30	10	N/A	55	50
	2	12314	75	30	30	10	N/A	55	50
	3	17170	75	30	30	10	N/A	55	50
	4	18589	75	32	30	10	N/A	55	50
	5	12928	75	32	30	10	N/A	55	50
	6	10718	75	30	30	10	N/A	55	50
	7	9750	75	30	30	10	N/A	55	50
	8	9750	75	30	30	10	N/A	55	50
	9	9750	75	30	30	10	N/A	55	50
	10	9750	75	30	30	10	N/A	55	50
	11	9750	75	30	30	10	N/A	55	50
	12	9750	75	30	30	10	N/A	55	50
	13	10195	75	30	30	10	N/A	55	50
	14	11310	75	30	30	10	N/A	55	50
	15	13642	75	30	30	10	N/A	55	50
	16	13141	96	30	20	10	30	55	50
	17	14344	77	30	30	10	N/A	55	50
	18	13964	77	30	30	10	N/A	55	50
	19	16615	77	30	30	10	N/A	55	50
	20	11668	76	30	20	10	N/A	55	50
	21	12462	96	30	20	10	30	55	50
11	1	11344	101	30	30	10	N/A	55	50
	2	10896	104	30	30	10	N/A	55	50
	3	11033	75	30	30	10	N/A	55	50
	4	10802	75	30	30	10	N/A	55	50
	5	10340	75	30	30	10	N/A	55	50
	6	11676	95	30	20	10	30	55	50
	7	10361	101	30	20	10	N/A	55	50
	8	10619	94	30	30	10	N/A	55	50
12	1	9230	70	30	30	10	N/A	50	50
	2	9240	70	30	30	10	N/A	50	50
	3	8795	70	30	20	10	N/A	50	50
	4	9366	75	30	20	10	N/A	55	50
	5	10298	75	30	20	10	N/A	55	50
	6	11125	75	30	30	10	N/A	55	50
	7	11979	75	30	30	10	N/A	55	50
	8	15626	77	30	30	10	N/A	55	50
	9	8649	78	25	10	10	N/A	55	45
13	1	12514	99	25	30	10	25	55	50
	2	9890	90	25	20	10	25	55	50
	3	9409	75	25	30	10	N/A	55	50
	4	9122	75	25	20	10	N/A	55	50
	5	7908	88	25	10	10	N/A	55	45
	6	8580	76	25	20	10	N/A	55	50
	7	8794	75	25	20	10	N/A	55	50
	8	8794	75	25	20	10	N/A	55	50
	9	11201	95	30	20	10	30	55	50
	10	8960	75	30	20	10	N/A	55	50

Block	Lot	Area (sf)	Width @ Front Setback	Front Setback	Rear Setback	Side Setback	Side Street Setback	House Pad Width	House Pad Depth
14	1	9940	75	30	20	10	N/A	55	50
	2	10118	75	30	20	10	N/A	55	50
	3	11879	95	30	30	10	30	55	50
	4	9461	75	30	30	10	N/A	55	50
	5	9899	87	30	20	10	N/A	55	50
	6	9757	88	30	20	10	N/A	55	50
	7	9778	86	30	20	10	N/A	55	50
	8	9315	75	30	20	10	N/A	55	50
	9	11959	136	30	20	10	N/A	55	50
	10	11855	137	30	20	10	N/A	55	50
	11	9130	75	30	20	10	N/A	55	50
	12	9406	75	30	20	10	N/A	55	50
	13	9734	75	30	20	10	N/A	55	50
	14	9951	75	30	30	10	N/A	55	50
	15	10611	75	30	30	10	N/A	55	50
	16	13145	95	25	30	10	30	55	50
	17	10807	106	25	30	10	N/A	55	50
	18	9446	75	25	20	10	N/A	55	50
	19	8773	70	25	20	10	N/A	50	50
	20	9199	75	25	20	10	N/A	55	50
	21	9531	75	25	30	10	N/A	55	50
	22	11622	95	25	30	10	30	55	50
	23	10447	75	30	20	10	N/A	55	50
15	1	17544	80	30	30	10	N/A	55	50
	2	14281	80	30	30	10	N/A	55	50
	3	15284	114	30	30	10	30	55	50
	4	11671	95	30	20	10	30	55	50
	5	10254	75	30	30	10	N/A	55	50
	6	11818	75	30	30	10	N/A	55	50
	7	16244	70	30	30	10	N/A	50	50
	8	13483	71	30	30	10	N/A	50	50
	9	11222	75	30	30	10	N/A	55	50
	10	11777	75	30	30	10	N/A	55	50
	11	16767	75	30	30	10	N/A	55	50
	12	21468	75	30	30	10	N/A	55	50
	13	14738	77	30	30	10	N/A	55	50
	14	19994	77	30	30	10	N/A	55	50
	15	14730	77	30	30	10	N/A	55	50
	16	15387	76	30	30	10	N/A	55	50
	17	16473	166	30	25	10	30	55	50
	18	10093	75	30	30	10	N/A	55	50
	19	9134	75	30	20	10	N/A	55	50
	20	12387	102	30	20	10	N/A	55	50
	21	10312	81	30	30	10	N/A	55	50
	22	10478	78	30	30	10	N/A	55	50
	23	10328	78	30	30	10	N/A	55	50
	24	11006	78	30	30	10	N/A	55	50
	25	11356	78	30	30	10	N/A	55	50
	26	11394	78	30	30	10	N/A	55	50
16	1	12712	106	30	20	10	30	55	50
	2	11877	75	30	30	10	N/A	55	50
	3	17538	75	30	30	10	N/A	55	50

CROW RIVER HEIGHTS WEST FUTURE ADD.
HANOVER, MN

BACKES COMPANIES
11413 ASHBURY CIRCLE N.
CHAMPLIN, MN 55316
PHONE: (612) 369-7750
FAX (612) 566-1525

LOUCKS
PLANNING
CIVIL ENGINEERING
LAND SURVEYING
LANDSCAPE ARCHITECTURE
ENVIRONMENTAL
7200 Hemlock Lane, Suite 300
Maple Grove, MN 55369
763.424.5505
www.loucksinc.com

CADD QUALIFICATION

CADD files prepared by the Consultant for this project are instruments of the Consultant professional services for use solely with respect to this project. These CADD files shall not be used on other projects, for additions to this project, or for completion of this project by others without written approval by the Consultant. With the Consultant's approval, others may be permitted to obtain copies of the CADD drawing files for information and reference only. All intentional or unintentional revisions, additions, or deletions to these CADD files shall be made at the full risk of that party making such revisions, additions or deletions and that party shall hold harmless and indemnify the Consultant from any & all responsibilities, claims, and liabilities.

SUBMITTAL/REVISIONS

04/20/18	CITY SUBMITTAL
05/24/18	CITY COMMENTS

PROFESSIONAL SIGNATURE

I hereby certify that this survey, plan or report was prepared by me or under my direct supervision and that I am a duly Licensed Land Surveyor under the laws of the State of Minnesota.

Henry D. Nelson - PLS
License No. 17255
Date 4/2/18

QUALITY CONTROL

Loucks Project No.	16-101.AA
Project Lead	HDN
Drawn By	SFM
Checked By	HDN
Field Crew	DP/GF

SHEET INDEX

C0-1	COVER SHEET
C1-1	EXISTING CONDITIONS
C1-2	PRELIMINARY PLAT
C2-0 - C2-2	SITE PLAN
C3-0 - C3-2	GRADING PLAN
C3-3 - C3-5	SWPPP PLAN & NOTES
C4-0 - C4-2	UTILITY PLAN
C8-1 - C8-2	DETAILS
L0-1 - L0-3	TREE PRESERVATION
L0-4	TREE INVENTORY
L1-1 - L1-2	LANDSCAPE PLANS
L2-1	LANDSCAPE DETAILS

PRELIMINARY PLAT

Plotted: 05 /25 / 2018 11:26 AM W:\2016\16101A\CADD DATA\SURVEY_dwg Sheet Files\P16101A-PrePlat

0 100 200
SCALE IN FEET

EXISTING	CIVIL LEGEND	PROPOSED
	SANITARY MANHOLE	
	STORM MANHOLE	
	CATCH BASIN	
	CULVERT	
	HYDRANT	
	GATEVALVE	
	POST INDICATOR VALVE	
	LIGHT POLE	
	POWER POLE	
	SIGN	
	BENCHMARK	
	SOIL BORINGS	
	WATER MANHOLE	
	TELEPHONE MANHOLE	
	UTILITY MANHOLE	
	ELECTRIC MANHOLE	
	WATER SERVICE	
	SANITARY SERVICE	
	HANDICAP PARKING	
	DIRECTION OF FLOW	
	SPOT ELEVATION	
	CONTOURS	
	SANITARY SEWER	
	STORM SEWER	
	WATERMAIN	
	FORCEMAIN	
	DRAINTILE	
	SILT FENCE	
	CURB & GUTTER	
	RETAINING WALL	
	TREELINE	
	EASEMENT LINE	
	SETBACK LINE	
	FENCE LINE	
	UNDERGROUND TELE	
	UNDERGROUND GAS	
	OVERHEAD UTILITY	

WETLANDS

ID #	Area sf	Impact sf	Mitigation sf
1	10,783	0	0
2A	1,712	1,712	3,424
2B	1,600	1,600	3,200
2C	4,153	4,153	8,306
2D	21,766	0	0
2E	40,216	0	0
3	1,276	1,276	2,552
4	18,376	0	0
5	5,981	5,981	11,962
6	39,712	0	0
7	1,014	1,014	2,028
8	2,536	2,536	5,072
10	6,629	6,629	13,258
11	41,815	0	0
12	69,587	0	0

Total Wetland Area = 267,156 sf
Total Wetland Impact = 24,901 sf
Total Mitigation Area= 49,802 sf

CALL BEFORE YOU DIG!
Gopher State One Call
TWIN CITY AREA: 651-454-0002
TOLL FREE: 1-800-252-1166

WARNING:

THE CONTRACTOR SHALL BE RESPONSIBLE FOR CALLING FOR LOCATIONS OF ALL EXISTING UTILITIES. THEY SHALL COOPERATE WITH ALL UTILITY COMPANIES IN MAINTAINING THEIR SERVICE AND / OR RELOCATION OF LINES.

THE CONTRACTOR SHALL CONTACT GOPHER STATE ONE CALL AT 651-454-0002 AT LEAST 48 HOURS IN ADVANCE FOR THE LOCATIONS OF ALL UNDERGROUND WIRES, CABLES, CONDUITS, PIPES, MANHOLES, VALVES OR OTHER BURIED STRUCTURES BEFORE DIGGING. THE CONTRACTOR SHALL REPAIR OR REPLACE THE ABOVE WHEN DAMAGED DURING CONSTRUCTION AT NO COST TO THE OWNER.

CROW RIVER HEIGHTS WEST FUTURE ADD.

HANOVER, MN

BACKES COMPANIES
11413 ASHBURY CIRCLE N.
CHAMPLIN, MN 55316
PHONE: (612) 369-7750
FAX (612) 566-1525

LOUCKS
PLANNING
CIVIL ENGINEERING
LAND SURVEYING
LANDSCAPE ARCHITECTURE
ENVIRONMENTAL
7200 Hemlock Lane, Suite 300
Maple Grove, MN 55369
763.424.5505
www.loucksinc.com

CADD QUALIFICATION

CADD files prepared by the Consultant for this project are instruments of the Consultant professional services for use solely with respect to this project. These CADD files shall not be used on other projects, for additions to this project, or for completion of this project by others without written approval by the Consultant. Such written approval shall indicate that it is permitted to obtain copies of the CADD drawing files for information and reference only. All intentional or unintentional revisions, additions, or deletions to these CADD files shall be made at the full risk of that party making such revisions, additions or deletions and that party shall hold harmless and indemnify the Consultant from any & all responsibilities, claims, and liabilities.

SUBMITTAL/REVISIONS

04/20/18	CITY SUBMITTAL
05/24/18	CITY COMMENTS

PROFESSIONAL SIGNATURE

I hereby certify that this plan, specification, or report was prepared by me or under my direct supervision and that I am a duly Licensed Professional Engineer under the laws of the State of Minnesota.

PRELIMINARY

Licensed Professional Engineer - Name/Louth - PE
Date 20383

QUALITY CONTROL

Loucks Project No.	16101A
Project Lead	TWM
Drawn By	ZHW
Checked By	TWM
Review Date	05/24/18

SHEET INDEX

C0-1	COVER SHEET
C1-1	EXISTING CONDITIONS
C1-2	PRELIMINARY PLAT
C2-0 - C2-2	SITE PLAN
C3-0 - C3-2	GRADING PLAN
C3-3 - C3-5	SWPPP PLAN & NOTES
C4-0 - C4-2	UTILITY PLAN
C8-1 - C8-2	DETAILS
L0-1 - L0-3	TREE PRESERVATION
L0-4	TREE INVENTORY
L1-1 - L1-2	LANDSCAPE PLANS
L2-1	LANDSCAPE DETAILS

OVERALL SITE PLAN

C2-0

Plotted: 05 /25 / 2018 11:52 AM W:\2016\16101A\CADD DATA\CIVIL_dwg Sheet Files\C2-1 SITE PLAN

0 50 100
SCALE IN FEET

EXISTING	CIVIL LEGEND	PROPOSED
	SANITARY MANHOLE	
	STORM MANHOLE	
	CATCH BASIN	
	CULVERT	
	HYDRANT	
	GATEVALVE	
	POST INDICATOR VALVE	
	LIGHT POLE	
	POWER POLE	
	SIGN	
	BENCHMARK	
	SOIL BORINGS	
	WATER MANHOLE	
	TELEPHONE MANHOLE	
	UTILITY MANHOLE	
	ELECTRIC MANHOLE	
	WATER SERVICE	
	SANITARY SERVICE	
	HANDICAP PARKING	
	DIRECTION OF FLOW	
	SPOT ELEVATION	
	CONTOURS	
	SANITARY SEWER	
	STORM SEWER	
	WATERMAIN	
	FORCEMAIN	
	DRAINTILE	
	SILT FENCE	
	CURB & GUTTER	
	RETAINING WALL	
	TREELINE	
	EASEMENT LINE	
	SETBACK LINE	
	FENCE LINE	
	UNDERGROUND TELE	
	UNDERGROUND GAS	
	OVERHEAD UTILITY	

CALL BEFORE YOU DIG!
Gopher State One Call
TWIN CITY AREA: 651-454-0002
TOLL FREE: 1-800-252-1166

WARNING:

THE CONTRACTOR SHALL BE RESPONSIBLE FOR CALLING FOR LOCATIONS OF ALL EXISTING UTILITIES. THEY SHALL COOPERATE WITH ALL UTILITY COMPANIES IN MAINTAINING THEIR SERVICE AND / OR RELOCATION OF LINES.

THE CONTRACTOR SHALL CONTACT GOPHER STATE ONE CALL AT 651-454-0002 AT LEAST 48 HOURS IN ADVANCE FOR THE LOCATIONS OF ALL UNDERGROUND WIRES, CABLES, CONDUITS, PIPES, MANHOLES, VALVES OR OTHER BURIED STRUCTURES BEFORE DIGGING. THE CONTRACTOR SHALL REPAIR OR REPLACE THE ABOVE WHEN DAMAGED DURING CONSTRUCTION AT NO COST TO THE OWNER.

CROW RIVER HEIGHTS WEST FUTURE ADD.

HANOVER, MN

BACKES COMPANIES
11413 ASHBURY CIRCLE N.
CHAMPLIN, MN 55316
PHONE: (612) 369-7750
FAX (612) 566-1525

LOUCKS
PLANNING
CIVIL ENGINEERING
LAND SURVEYING
LANDSCAPE ARCHITECTURE
ENVIRONMENTAL
7200 Hemlock Lane, Suite 300
Maple Grove, MN 55369
763.424.5505
www.loucksinc.com

CADD QUALIFICATION

CADD files prepared by the Consultant for this project are instruments of the Consultant professional services for use solely with respect to this project. These CADD files shall not be used on other projects, for additions to this project, or for completion of this project by others without written approval by the Consultant. With the Consultant's approval, others may be permitted to obtain copies of the CADD drawing files for information and reference only. All intentional or unintentional revisions, additions, or deletions to these CADD files shall be made at the full risk of that party making such revisions, additions or deletions and that party shall hold harmless and indemnify the Consultant from any & all responsibilities, claims, and liabilities.

SUBMITTAL/REVISIONS

04/20/18	CITY SUBMITTAL
05/24/18	CITY COMMENTS

PROFESSIONAL SIGNATURE

I hereby certify that this plan, specification, or report was prepared by me or under my direct supervision and that I am a duly Licensed Professional Engineer under the laws of the State of Minnesota.

PRELIMINARY

License Number 20383
Date

QUALITY CONTROL

Loucks Project No.	16101A
Project Lead	TWM
Drawn By	ZHW
Checked By	TWM
Review Date	05/24/18

SHEET INDEX

C0-1	COVER SHEET
C1-1	EXISTING CONDITIONS
C1-2	PRELIMINARY PLAT
C2-0 - C2-2	SITE PLAN
C3-0 - C3-2	GRADING PLAN
C3-3 - C3-5	SWPPP PLAN & NOTES
C4-0 - C4-2	UTILITY PLAN
C8-1 - C8-2	DETAILS
L0-1 - L0-3	TREE PRESERVATION
L0-4	TREE INVENTORY
L1-1 - L1-2	LANDSCAPE PLANS
L2-1	LANDSCAPE DETAILS

NORTH SITE PLAN

C2-1

Plotted: 05/25/2018 11:52 AM W:\2016\16101A\CADD DATA\CIVIL dwg\Sheet Files\C2-1 SITE PLAN

EXISTING	CIVIL LEGEND	PROPOSED
	SANITARY MANHOLE	
	STORM MANHOLE	
	CATCH BASIN	
	CULVERT	
	HYDRANT	
	GATEVALVE	
	POST INDICATOR VALVE	
	LIGHT POLE	
	POWER POLE	
	SIGN	
	BENCHMARK	
	SOIL BORINGS	
	WATER MANHOLE	
	TELEPHONE MANHOLE	
	UTILITY MANHOLE	
	ELECTRIC MANHOLE	
	WATER SERVICE	
	SANITARY SERVICE	
	HANDICAP PARKING	
	DIRECTION OF FLOW	
	SPOT ELEVATION	
	CONTOURS	
	SANTARY SEWER	
	STORM SEWER	
	WATERMAIN	
	FORCEMAIN	
	DRAINTILE	
	SILT FENCE	
	CURB & GUTTER	
	RETAINING WALL	
	TREELINE	
	EASEMENT LINE	
	SETBACK LINE	
	FENCE LINE	
	UNDERGROUND TELE	
	UNDERGROUND GAS	
	OVERHEAD UTILITY	

0 50 100
SCALE IN FEET

CALL BEFORE YOU DIG!
Gopher State One Call
TWIN CITY AREA: 651-454-0002
TOLL FREE: 1-800-252-1166

WARNING:

THE CONTRACTOR SHALL BE RESPONSIBLE FOR CALLING FOR LOCATIONS OF ALL EXISTING UTILITIES. THEY SHALL COOPERATE WITH ALL UTILITY COMPANIES IN MAINTAINING THEIR SERVICE AND / OR RELOCATION OF LINES.

THE CONTRACTOR SHALL CONTACT GOPHER STATE ONE CALL AT 651-454-0002 AT LEAST 48 HOURS IN ADVANCE FOR THE LOCATIONS OF ALL UNDERGROUND WIRES, CABLES, CONDUITS, PIPES, MANHOLES, VALVES OR OTHER BURIED STRUCTURES BEFORE DIGGING. THE CONTRACTOR SHALL REPAIR OR REPLACE THE ABOVE WHEN DAMAGED DURING CONSTRUCTION AT NO COST TO THE OWNER.

CROW RIVER HEIGHTS WEST FUTURE ADD.
HANOVER, MN

BACKES COMPANIES
11413 ASHBURY CIRCLE N.
CHAMPLIN, MN 55316
PHONE: (612) 369-7750
FAX (612) 566-1525

LOUCKS
PLANNING
CIVIL ENGINEERING
LAND SURVEYING
LANDSCAPE ARCHITECTURE
ENVIRONMENTAL
7200 Hemlock Lane, Suite 300
Maple Grove, MN 55369
763.424.5505
www.loucksinc.com

CADD QUALIFICATION

CADD files prepared by the Consultant for this project are instruments of the Consultant professional services for use solely with respect to this project. These CADD files shall not be used on other projects, for additions to this project, or for completion of this project by others without written approval by the Consultant. With the Consultant's approval, others may be permitted to obtain copies of the CADD drawing files for information and reference only. All intentional or unintentional revisions, additions, or deletions to these CADD files shall be made at the full risk of that party making such revisions, additions or deletions and that party shall hold harmless and indemnify the Consultant from any & all responsibilities, claims, and liabilities.

SUBMITTAL/REVISIONS

04/20/18	CITY SUBMITTAL
05/24/18	CITY COMMENTS

PROFESSIONAL SIGNATURE

I hereby certify that this plan, specification or report was prepared by me or under my direct supervision and that I am a duly Licensed Professional Engineer under the laws of the State of Minnesota.

PRELIMINARY

License No. 20383
Date

QUALITY CONTROL

Loucks Project No.	16101A
Project Lead	TWM
Drawn By	ZHW
Checked By	TWM
Review Date	05/24/18

SHEET INDEX

C0-1	COVER SHEET
C1-1	EXISTING CONDITIONS
C1-2	PRELIMINARY PLAT
C2-0 - C2-2	SITE PLAN
C3-0 - C3-2	GRADING PLAN
C3-3 - C3-5	SWPPP PLAN & NOTES
C4-0 - C4-2	UTILITY PLAN
C8-1 - C8-2	DETAILS
L0-1 - L0-3	TREE PRESERVATION
L0-4	TREE INVENTORY
L1-1 - L1-2	LANDSCAPE PLANS
L2-1	LANDSCAPE DETAILS

SOUTH SITE PLAN

C2-2

Plotted: 05 /25 / 2018 11:53 AM W:\2016\16101A\CADD DATA\CIVIL\ dwg Sheet Files\C2-1 SITE PLAN

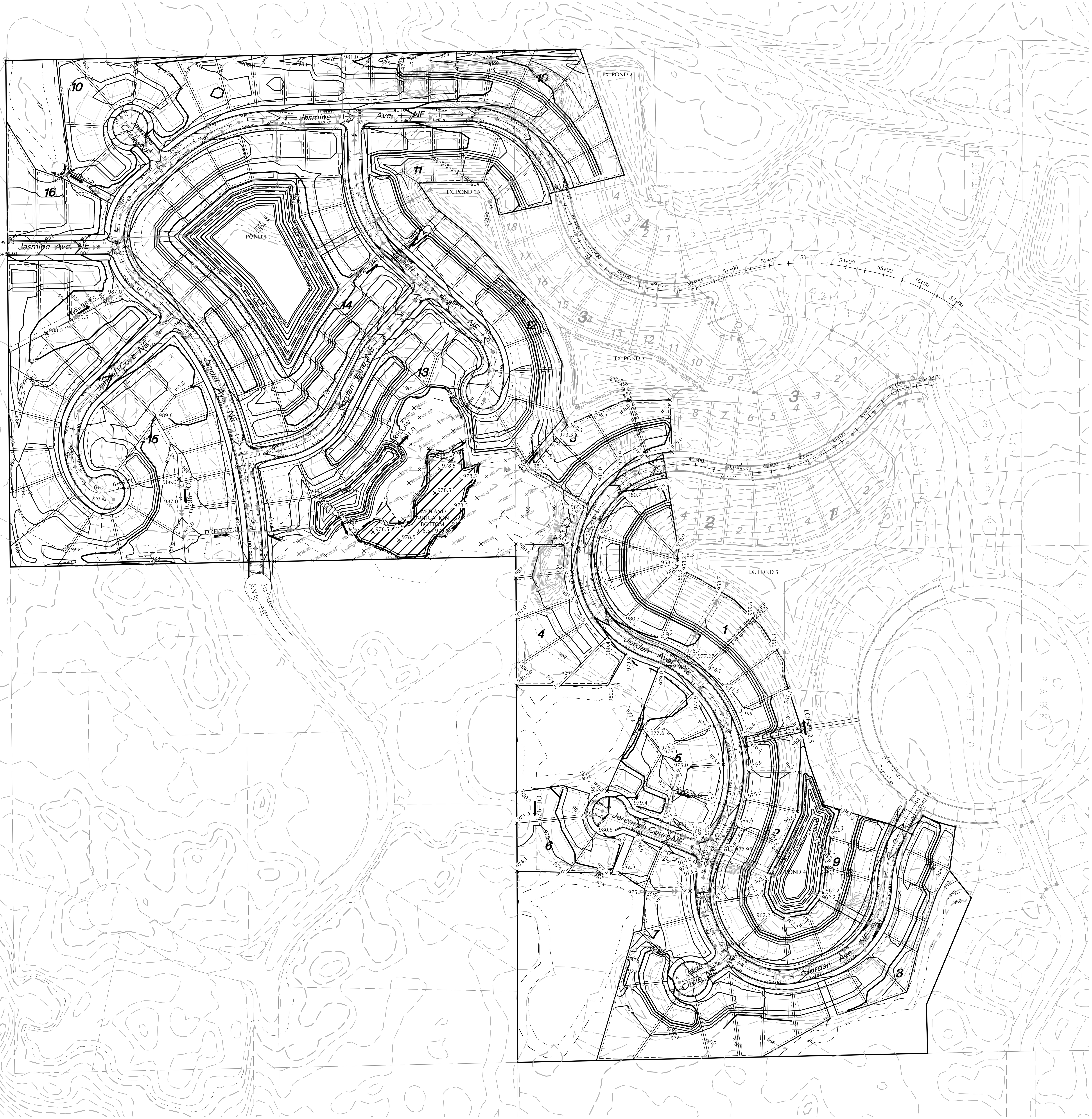

N

0 100 200
SCALE IN FEET

EXISTING	CIVIL LEGEND	PROPOSED
	SANITARY MANHOLE	
	STORM MANHOLE	
	CATCH BASIN	
	CULVERT	
	HYDRANT	
	GATEVALVE	
	POST INDICATOR VALVE	
	LIGHT POLE	
	POWER POLE	
	SIGN	
	BENCHMARK	
	SOIL BORINGS	
	WATER MANHOLE	
	TELEPHONE MANHOLE	
	UTILITY MANHOLE	
	ELECTRIC MANHOLE	
	WATER SERVICE	
	SANITARY SERVICE	
	HANDICAP PARKING	
	DIRECTION OF FLOW	
	SPOT ELEVATION	
	CONTOURS	
	SANITARY SEWER	
	STORM SEWER	
	WATERMAIN	
	FORCEMAIN	
	DRAINTILE	
	SILT FENCE	
	CURB & GUTTER	
	RETAINING WALL	
	TREELINE	
	EASEMENT LINE	
	SETBACK LINE	
	FENCE LINE	
	UNDERGROUND TELE	
	UNDERGROUND GAS	
	OVERHEAD UTILITY	

CROW RIVER HEIGHTS WEST FUTURE ADD.

HANOVER, MN

BACKES COMPANIES
11413 ASHBURY CIRCLE N.
CHAMPLIN, MN 55316
PHONE: (612) 369-7750
FAX (612) 566-1525

LOUCKS
PLANNING
CIVIL ENGINEERING
LAND SURVEYING
LANDSCAPE ARCHITECTURE
ENVIRONMENTAL
7200 Hemlock Lane, Suite 300
Maple Grove, MN 55369
763.424.5505
www.loucksinc.com

CADD QUALIFICATION

CADD files prepared by the Consultant for this project are instruments of the Consultant professional services for use solely with respect to this project. These CADD files shall not be used on other projects, for additions to this project, or for completion of this project by others without written approval by the Consultant. With the Consultant's approval, others may be permitted to obtain copies of the CADD drawing files for information and reference only. All intentional or unintentional revisions, additions, or deletions to these CADD files shall be made at the full risk of that party making such revisions, additions or deletions and that party shall hold harmless and indemnify the Consultant from any & all responsibilities, claims, and liabilities.

SUBMITTAL/REVISIONS

04/20/18	CITY SUBMITTAL
05/24/18	CITY COMMENTS

PROFESSIONAL SIGNATURE

I hereby certify that this plan, specification or report was prepared by me or under my direct supervision and that I am a duly Licensed Professional Engineer under the laws of the State of Minnesota.

PRELIMINARY

...McLouth - PE
License No. 20383
Date

QUALITY CONTROL

Loucks Project No.	16101A
Project Lead	TWM
Drawn By	ZHW
Checked By	TWM
Review Date	05/24/18

SHEET INDEX

C0-1	COVER SHEET
C1-1	EXISTING CONDITIONS
C1-2	PRELIMINARY PLAT
C2-0 - C2-2	SITE PLAN
C3-0 - C3-2	GRADING PLAN
C3-3 - C3-5	SWPPP PLAN & NOTES
C4-0 - C4-2	UTILITY PLAN
C8-1 - C8-2	DETAILS
L0-1 - L0-3	TREE PRESERVATION
L0-4	TREE INVENTORY
L1-1 - L1-2	LANDSCAPE PLANS
L2-1	LANDSCAPE DETAILS

CALL BEFORE YOU DIG!
Gopher State One Call
TWIN CITY AREA: 651-454-0002
TOLL FREE: 1-800-252-1166

WARNING:

THE CONTRACTOR SHALL BE RESPONSIBLE FOR CALLING FOR LOCATIONS OF ALL EXISTING UTILITIES. THEY SHALL COOPERATE WITH ALL UTILITY COMPANIES IN MAINTAINING THEIR SERVICE AND / OR RELOCATION OF LINES.

THE CONTRACTOR SHALL CONTACT GOPHER STATE ONE CALL AT 651-454-0002 AT LEAST 48 HOURS IN ADVANCE FOR THE LOCATIONS OF ALL UNDERGROUND WIRES, CABLES, CONDUITS, PIPES, MANHOLES, VALVES OR OTHER BURIED STRUCTURES BEFORE DIGGING. THE CONTRACTOR SHALL REPAIR OR REPLACE THE ABOVE WHEN DAMAGED DURING CONSTRUCTION AT NO COST TO THE OWNER.

OVERALL GRADING PLAN

C3-0

Plotted: 05 / 25 / 2018 11:53 AM W:\2016\16101A\CADD DATA\CIVIL_dwg Sheet Files\C3-1 GRADING PLAN

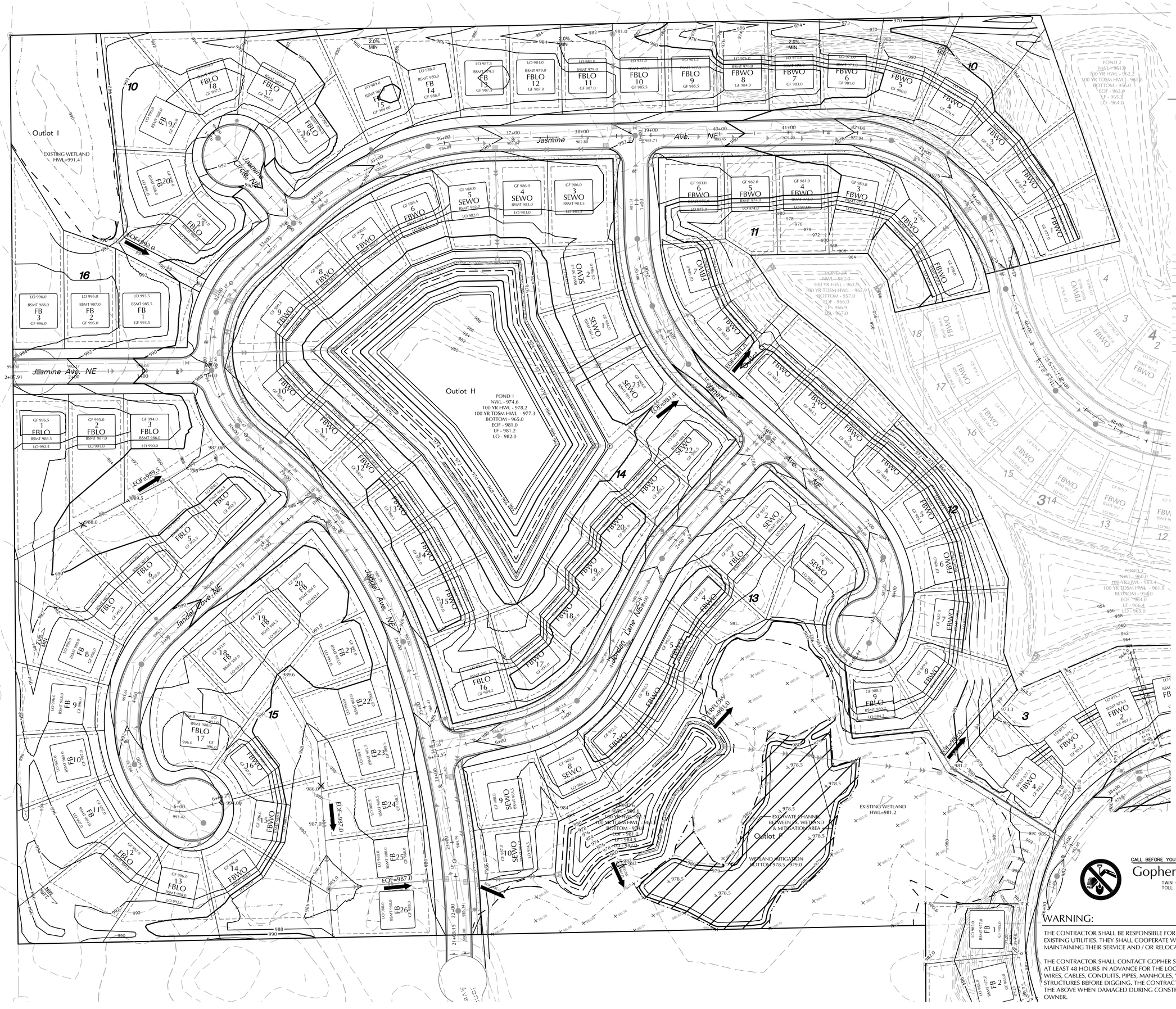

0 50 100
SCALE IN FEET

EXISTING	CIVIL LEGEND	PROPOSED
	SANITARY MANHOLE	
	STORM MANHOLE	
	CATCH BASIN	
	CULVERT	
	HYDRANT	
	GATEVALVE	
	POST INDICATOR VALVE	
	LIGHT POLE	
	POWER POLE	
	SIGN	
	BENCHMARK	
	SOIL BORINGS	
	WATER MANHOLE	
	TELEPHONE MANHOLE	
	UTILITY MANHOLE	
	ELECTRIC MANHOLE	
	WATER SERVICE	
	SANITARY SERVICE	
	HANDICAP PARKING	
	DIRECTION OF FLOW	
	SPOT ELEVATION	
	CONTOURS	
	SANITARY SEWER	
	STORM SEWER	
	WATERMAIN	
	FORCEMAIN	
	DRAINTILE	
	SILT FENCE	
	CURB & GUTTER	
	RETAINING WALL	
	TREELINE	
	EASEMENT LINE	
	SETBACK LINE	
	FENCE LINE	
	UNDERGROUND TELE	
	UNDERGROUND GAS	
	OVERHEAD UTILITY	

CALL BEFORE YOU DIG!
Gopher State One Call
TWIN CITY AREA: 651-454-0002
TOLL FREE: 1-800-252-1166

WARNING:

THE CONTRACTOR SHALL BE RESPONSIBLE FOR CALLING FOR LOCATIONS OF ALL EXISTING UTILITIES. THEY SHALL COOPERATE WITH ALL UTILITY COMPANIES IN MAINTAINING THEIR SERVICE AND / OR RELOCATION OF LINES.

THE CONTRACTOR SHALL CONTACT GOPHER STATE ONE CALL AT 651-454-0002 AT LEAST 48 HOURS IN ADVANCE FOR THE LOCATIONS OF ALL UNDERGROUND WIRES, CABLES, CONDUITS, PIPES, MANHOLES, VALVES OR OTHER BURIED STRUCTURES BEFORE DIGGING. THE CONTRACTOR SHALL REPAIR OR REPLACE THE ABOVE WHEN DAMAGED DURING CONSTRUCTION AT NO COST TO THE OWNER.

CROW RIVER HEIGHTS WEST FUTURE ADD.

HANOVER, MN

BACKES COMPANIES
11413 ASHBURY CIRCLE N.
CHAMPLIN, MN 55316
PHONE: (612) 369-7750
FAX (612) 566-1525

LOUCKS
PLANNING
CIVIL ENGINEERING
LAND SURVEYING
LANDSCAPE ARCHITECTURE
ENVIRONMENTAL
7200 Hemlock Lane, Suite 300
Maple Grove, MN 55369
763.424.5505
www.loucksinc.com

CADD QUALIFICATION

CADD files prepared by the Consultant for this project are instruments of the Consultant's professional services for use solely with respect to this project. These CADD files shall not be used on other projects, for additions to this project, or for completion of this project by others without written approval by the Consultant. With the Consultant's approval, others may be permitted to obtain copies of the CADD drawing files for information and reference only. All intentional or unintentional revisions, additions, or deletions to these CADD files shall be made at the full risk of that party making such revisions, additions or deletions and that party shall hold harmless and indemnify the Consultant from any & all responsibilities, claims, and liabilities.

SUBMITTAL/REVISIONS

04/20/18	CITY SUBMITTAL
05/24/18	CITY COMMENTS

PROFESSIONAL SIGNATURE

I hereby certify that this plan, specification or report was prepared by me or under my direct supervision and that I am a duly Licensed Professional Engineer under the laws of the State of Minnesota.

PRELIMINARY

Licensed Name: Todd M. Wilcox - PE
License No. 20383
Date:

QUALITY CONTROL

Loucks Project No.	16101A
Project Lead	TWM
Drawn By	ZHW
Checked By	TWM
Review Date	05/24/18

SHEET INDEX

C0-1	COVER SHEET
C1-1	EXISTING CONDITIONS
C1-2	PRELIMINARY PLAT
C2-0 - C2-2	SITE PLAN
C3-0 - C3-2	GRADING PLAN
C3-3 - C3-5	SWPPP PLAN & NOTES
C4-0 - C4-2	UTILITY PLAN
C8-1 - C8-2	DETAILS
L0-1 - L0-3	TREE PRESERVATION
L0-4	TREE INVENTORY
L1-1 - L1-2	LANDSCAPE PLANS
L2-1	LANDSCAPE DETAILS

NORTH GRADING PLAN

C3-1

Plotted: 05 / 25 / 2018 11:54 AM W:\2016\16101A\CADD DATA\CIVIL dwg Sheet Files\C3-1 GRADING PLAN

EXISTING	CIVIL LEGEND	PROPOSED
	SANITARY MANHOLE	
	STORM MANHOLE	
	CATCH BASIN	
	CULVERT	
	HYDRANT	
	GATEVALVE	
	POST INDICATOR VALVE	
	LIGHT POLE	
	POWER POLE	
	SIGN	
	BENCHMARK	
	SOIL BORINGS	
	WATER MANHOLE	
	TELEPHONE MANHOLE	
	UTILITY MANHOLE	
	ELECTRIC MANHOLE	
	WATER SERVICE	
	SANITARY SERVICE	
	HANDICAP PARKING	
	DIRECTION OF FLOW	
	SPOT ELEVATION	
	CONTOURS	
	SANITARY SEWER	
	STORM SEWER	
	WATERMAIN	
	FORCEMAIN	
	DRAINTILE	
	SILT FENCE	
	CURB & GUTTER	
	RETAINING WALL	
	TREELINE	
	EASEMENT LINE	
	SETBACK LINE	
	FENCE LINE	
	UNDERGROUND TELE	
	UNDERGROUND GAS	
	OVERHEAD UTILITY	

0 50 100
SCALE IN FEET

CALL BEFORE YOU DIG!
Gopher State One Call
TWIN CITY AREA: 651-454-0002
TOLL FREE: 1-800-252-1166

WARNING:

THE CONTRACTOR SHALL BE RESPONSIBLE FOR CALLING FOR LOCATIONS OF ALL EXISTING UTILITIES. THEY SHALL COOPERATE WITH ALL UTILITY COMPANIES IN MAINTAINING THEIR SERVICE AND / OR RELOCATION OF LINES.

THE CONTRACTOR SHALL CONTACT GOPHER STATE ONE CALL AT 651-454-0002 AT LEAST 48 HOURS IN ADVANCE FOR THE LOCATIONS OF ALL UNDERGROUND WIRES, CABLES, CONDUITS, PIPES, MANHOLES, VALVES OR OTHER BURIED STRUCTURES BEFORE DIGGING. THE CONTRACTOR SHALL REPAIR OR REPLACE THE ABOVE WHEN DAMAGED DURING CONSTRUCTION AT NO COST TO THE OWNER.

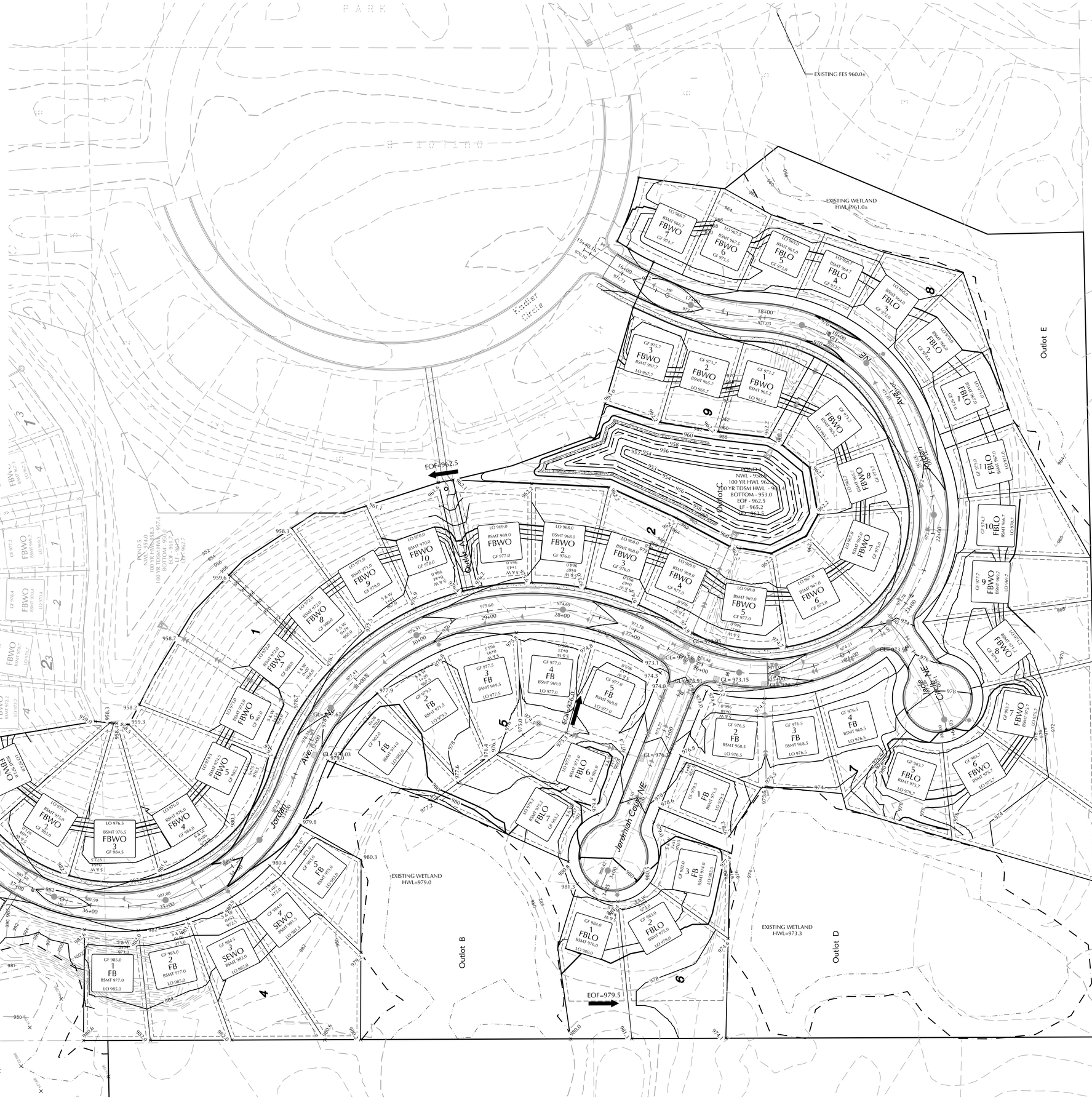

CROW RIVER HEIGHTS WEST FUTURE ADD.

HANOVER, MN

BACKES COMPANIES
11413 ASHBURY CIRCLE N.
CHAMPLIN, MN 55316
PHONE: (612) 369-7750
FAX (612) 566-1525

LOUCKS
PLANNING
CIVIL ENGINEERING
LAND SURVEYING
LANDSCAPE ARCHITECTURE
ENVIRONMENTAL
7200 Hemlock Lane, Suite 300
Maple Grove, MN 55369
763.424.5505
www.loucksinc.com

CADD QUALIFICATION

CADD files prepared by the Consultant for this project are instruments of the Consultant professional services for use solely with respect to this project. These CADD files shall not be used on other projects, for additions to this project, or for completion of this project by others without written approval by the Consultant. With the Consultant's approval, others may be permitted to obtain copies of the CADD drawing files for information and reference only. All intentional or unintentional revisions, additions, or deletions to these CADD files shall be made at the full risk of that party making such revisions, additions or deletions and that party shall hold harmless and indemnify the Consultant from any & all responsibilities, claims, and liabilities.

SUBMITTAL/REVISIONS

04/20/18	CITY SUBMITTAL
05/24/18	CITY COMMENTS

PROFESSIONAL SIGNATURE

I hereby certify that this plan, specification or report was prepared by me or under my direct supervision and that I am a duly Licensed Professional Engineer under the laws of the State of Minnesota.

PRELIMINARY

License No. 20383
Date

QUALITY CONTROL

Loucks Project No.	16101A
Project Lead	TWM
Drawn By	ZHW
Checked By	TWM
Review Date	05/24/18

SHEET INDEX

C0-1	COVER SHEET
C1-1	EXISTING CONDITIONS
C1-2	PRELIMINARY PLAT
C2-0 - C2-2	SITE PLAN
C3-0 - C3-2	GRADING PLAN
C3-3 - C3-5	SWPPP PLAN & NOTES
C4-0 - C4-2	UTILITY PLAN
C8-1 - C8-2	DETAILS
L0-1 - L0-3	TREE PRESERVATION
L0-4	TREE INVENTORY
L1-1 - L1-2	LANDSCAPE PLANS
L2-1	LANDSCAPE DETAILS

SOUTH GRADING PLAN

C3-2

Plotted: 05/25/2018 11:54 AM W:\2016\16101A\CADD DATA\CIVIL dwg Sheet Files\C3-1 GRADING PLAN

0 50 100
SCALE IN FEET

EXISTING	CIVIL LEGEND	PROPOSED
	SANITARY MANHOLE	
	STORM MANHOLE	
	CATCH BASIN	
	CULVERT	
	HYDRANT	
	GATEVALVE	
	POST INDICATOR VALVE	
	LIGHT POLE	
	POWER POLE	
	SIGN	
	BENCHMARK	
	SOIL BORINGS	
	WATER MANHOLE	
	TELEPHONE MANHOLE	
	UTILITY MANHOLE	
	ELECTRIC MANHOLE	
	WATER SERVICE	
	SANITARY SERVICE	
	HANDICAP PARKING	
	DIRECTION OF FLOW	
	SPOT ELEVATION	
	CONTOURS	
	SANITARY SEWER	
	STORM SEWER	
	WATERMAIN	
	FORCEMAIN	
	DRAINTILE	
	SILT FENCE	
	CURB & GUTTER	
	RETAINING WALL	
	TREELINE	
	EASEMENT LINE	
	SETBACK LINE	
	FENCE LINE	
	UNDERGROUND TELE	
	UNDERGROUND GAS	
	OVERHEAD UTILITY	

SITE PLAN LEGEND

- SILT FENCE
- BIOROLL
- INLET PROTECTION
- EXISTING DRAINAGE PATTERN
- PROPOSED DRAINAGE PATTERN
- ROCK CONSTRUCTION ENTRANCE
- WOODFIBER BLANKET

CALL BEFORE YOU DIG!
Gopher State One Call
TWIN CITY AREA: 651-454-0002
TOLL FREE: 1-800-252-1166

WARNING:

THE CONTRACTOR SHALL BE RESPONSIBLE FOR CALLING FOR LOCATIONS OF ALL EXISTING UTILITIES. THEY SHALL COOPERATE WITH ALL UTILITY COMPANIES IN MAINTAINING THEIR SERVICE AND / OR RELOCATION OF LINES.

THE CONTRACTOR SHALL CONTACT GOPHER STATE ONE CALL AT 651-454-0002 AT LEAST 48 HOURS IN ADVANCE FOR THE LOCATIONS OF ALL UNDERGROUND WIRES, CABLES, CONDUITS, PIPES, MANHOLES, VALVES OR OTHER BURIED STRUCTURES BEFORE DIGGING. THE CONTRACTOR SHALL REPAIR OR REPLACE THE ABOVE WHEN DAMAGED DURING CONSTRUCTION AT NO COST TO THE OWNER.

CROW RIVER HEIGHTS WEST FUTURE ADD.

HANOVER, MN

BACKES COMPANIES
11413 ASHBURY CIRCLE N.
CHAMPLIN, MN 55316
PHONE: (612) 369-7750
FAX (612) 566-1525

LOUCKS
PLANNING
CIVIL ENGINEERING
LAND SURVEYING
LANDSCAPE ARCHITECTURE
ENVIRONMENTAL
7200 Hemlock Lane, Suite 300
Maple Grove, MN 55369
763.424.5505
www.loucksinc.com

CADD QUALIFICATION

CADD files prepared by the Consultant for this project are instruments of the Consultant's professional services for use solely with respect to this project. These CADD files shall not be used on other projects, for additions to this project, or for completion of this project by others without written approval by the Consultant. Only the original (signed and sealed) files will be permitted to obtain copies of the CADD drawing files for information and reference only. All intentional or unintentional revisions, additions, or deletions to these CADD files shall be made at the full risk of that party making such revisions, additions or deletions and that party shall hold harmless and indemnify the Consultant from any & all responsibilities, claims, and liabilities.

SUBMITTAL/REVISIONS

04/20/18	CITY SUBMITTAL
05/24/18	CITY COMMENTS

PROFESSIONAL SIGNATURE

I hereby certify that this plan, specification, or report was prepared by me or under my direct supervision and that I am a duly Licensed Professional Engineer under the laws of the State of Minnesota.

PRELIMINARY

Licensed Name: Tyler W. McLouth - PE
Date: License No. 20383

QUALITY CONTROL

Loucks Project No.	16101A
Project Lead	TWM
Drawn By	ZHW
Checked By	TWM
Review Date	05/24/18

SHEET INDEX

C0-1	COVER SHEET
C1-1	EXISTING CONDITIONS
C1-2	PRELIMINARY PLAT
C2-0 - C2-2	SITE PLAN
C3-0 - C3-2	GRADING PLAN
C3-3 - C3-5	SWPPP PLAN & NOTES
C4-0 - C4-2	UTILITY PLAN
C8-1 - C8-2	DETAILS
L0-1 - L0-3	TREE PRESERVATION
L0-4	TREE INVENTORY
L1-1 - L1-2	LANDSCAPE PLANS
L2-1	LANDSCAPE DETAILS

NORTH SWPPP

C3-3

Plotted: 05 /25 / 2018 11:55 AM W:\2016\16101A\CADD DATA\CIVIL\ dwg Sheet Files\C-3 SWPPP

EXISTING	CIVIL LEGEND	PROPOSED
	SANITARY MANHOLE	
	STORM MANHOLE	
	CATCH BASIN	
	CULVERT	
	HYDRANT	
	GATEVALVE	
	POST INDICATOR VALVE	
	LIGHT POLE	
	POWER POLE	
	SIGN	
	BENCHMARK	
	SOIL BORINGS	
	WATER MANHOLE	
	TELEPHONE MANHOLE	
	UTILITY MANHOLE	
	ELECTRIC MANHOLE	
	WATER SERVICE	
	SANITARY SERVICE	
	HANDICAP PARKING	
	DIRECTION OF FLOW	
	SPOT ELEVATION	
	CONTOURS	
	SANITARY SEWER	
	STORM SEWER	
	WATERMAIN	
	FORCEMAIN	
	DRAINTILE	
	SILT FENCE	
	CURB & GUTTER	
	RETAINING WALL	
	TREELINE	
	EASEMENT LINE	
	SETBACK LINE	
	FENCE LINE	
	UNDERGROUND TELE	
	UNDERGROUND GAS	
	OVERHEAD UTILITY	

0 50 100
SCALE IN FEET

SITE PLAN LEGEND

- SILT FENCE
- BIOROLL
- INLET PROTECTION
- EXISTING DRAINAGE PATTERN
- PROPOSED DRAINAGE PATTERN
- ROCK CONSTRUCTION ENTRANCE
- WOODFIBER BLANKET

CALL BEFORE YOU DIG!

Gopher State One Call

TWIN CITY AREA: 651-454-0002
TOLL FREE: 1-800-252-1166

WARNING:

THE CONTRACTOR SHALL BE RESPONSIBLE FOR CALLING FOR LOCATIONS OF ALL EXISTING UTILITIES. THEY SHALL COOPERATE WITH ALL UTILITY COMPANIES IN MAINTAINING THEIR SERVICE AND / OR RELOCATION OF LINES.

THE CONTRACTOR SHALL CONTACT GOPHER STATE ONE CALL AT 651-454-0002 AT LEAST 48 HOURS IN ADVANCE FOR THE LOCATIONS OF ALL UNDERGROUND WIRES, CABLES, CONDUITS, PIPES, MANHOLES, VALVES OR OTHER BURIED STRUCTURES BEFORE DIGGING. THE CONTRACTOR SHALL REPAIR OR REPLACE THE ABOVE WHEN DAMAGED DURING CONSTRUCTION AT NO COST TO THE OWNER.

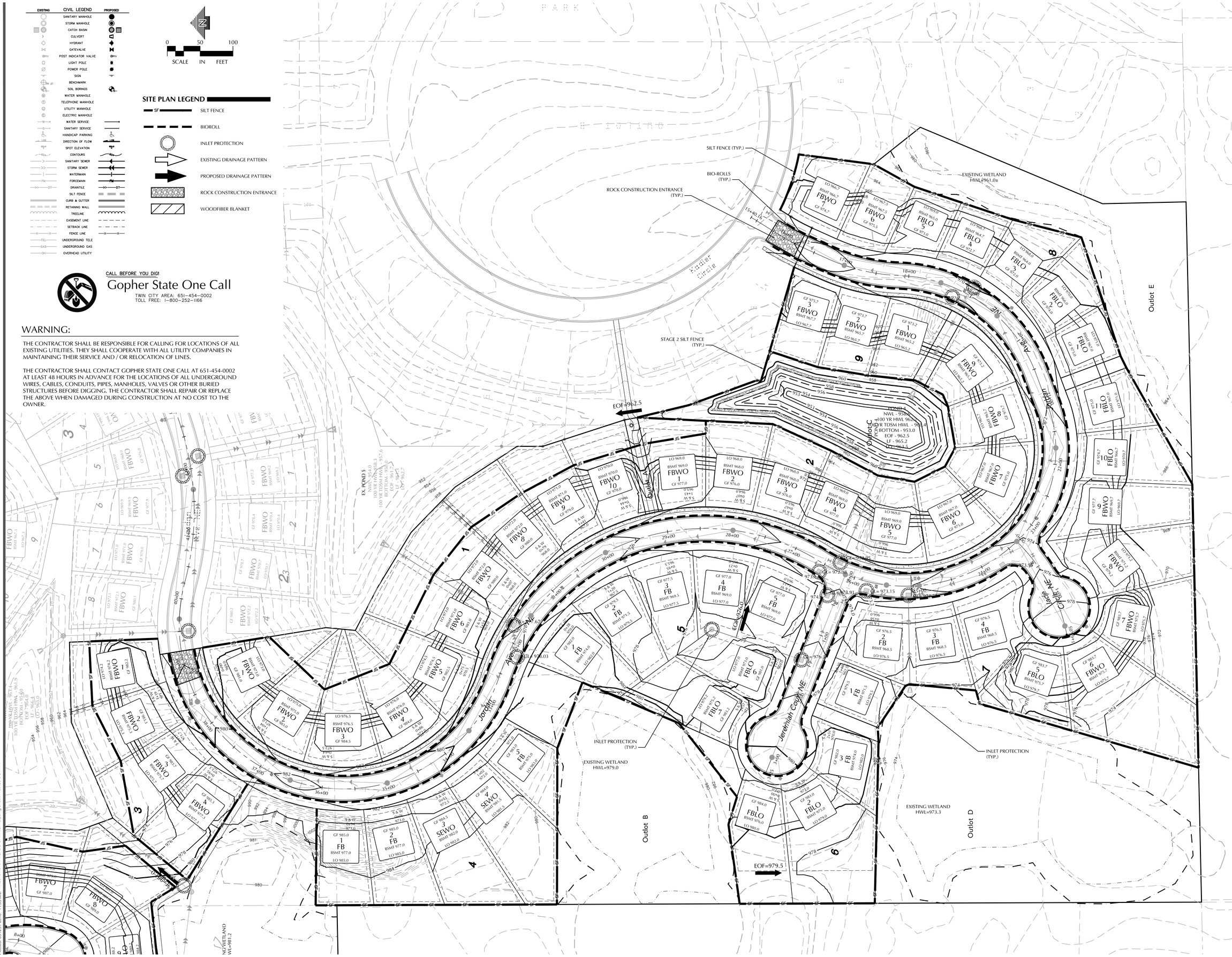

CROW RIVER HEIGHTS WEST FUTURE ADD.

HANOVER, MN

BACKES COMPANIES
11413 ASHBURY CIRCLE N.
CHAMPLIN, MN 55316
PHONE: (612) 369-7750
FAX (612) 566-1525

LOUCKS
PLANNING
CIVIL ENGINEERING
LAND SURVEYING
LANDSCAPE ARCHITECTURE
ENVIRONMENTAL
7200 Hemlock Lane, Suite 300
Maple Grove, MN 55369
763.424.5505
www.loucksinc.com

CADD QUALIFICATION

CADD files prepared by the Consultant for this project are instruments of the Consultant professional services for use solely with respect to this project. These CADD files shall not be used on other projects, for additions to this project, or for completion of this project by others without written approval by the Consultant. With the Consultant's approval, others may be permitted to obtain copies of the CADD drawing files for information and reference only. All intentional or unintentional revisions, additions, or deletions to these CADD files shall be made at the full risk of that party making such revisions, additions or deletions and that party shall hold harmless and indemnify the Consultant from any & all responsibilities, claims, and liabilities.

SUBMITTAL/REVISIONS

04/20/18	CITY SUBMITTAL
05/24/18	CITY COMMENTS

PROFESSIONAL SIGNATURE

I hereby certify that this plan, specification or report was prepared by me or under my direct supervision and that I am a duly Licensed Professional Engineer under the laws of the State of Minnesota.

PRELIMINARY

Licensed Professional Engineer: Zachary W. South - PE
Date: License No. 20383

QUALITY CONTROL

Loucks Project No.	16101A
Project Lead	TWM
Drawn By	ZWW
Checked By	TWM
Review Date	05/24/18

SHEET INDEX

C0-1	COVER SHEET
C1-1	EXISTING CONDITIONS
C1-2	PRELIMINARY PLAT
C2-0 - C2-2	SITE PLAN
C3-0 - C3-2	GRADING PLAN
C3-3 - C3-5	SWPPP PLAN & NOTES
C4-0 - C4-2	UTILITY PLAN
C8-1 - C8-2	DETAILS
L0-1 - L0-3	TREE PRESERVATION
L0-4	TREE INVENTORY
L1-1 - L1-2	LANDSCAPE PLANS
L2-1	LANDSCAPE DETAILS

SOUTH SWPPP

C3-4

Plotted: 05/25/2018 11:55 AM W:\2016\16101A\CADD DATA\CIVIL\ dwg Sheet Files\C3-3 SWPPP

SWPPP NOTES

1. PROJECT DESCRIPTION
THE NATURE OF THIS PROJECT WILL CONSIST OF CONSTRUCTING SINGLE FAMILY RESIDENTIAL LOTS AND HOMES, UTILITIES AND STREETS.

2. SEQUENCING OF MAJOR CONSTRUCTION ACTIVITIES ARE AS FOLLOWS:

1. INSTALL VEHICLE TRACKING BMP
2. INSTALL SILT FENCE AROUND SITE
3. INSTALL PROTECTIVE FENCE AROUND INFILTRATION AREAS
4. CLEAR AND GRUB SITE
5. STRIP AND STOCKPILE TOPSOIL
6. REMOVE PAVEMENTS AND UTILITIES
7. CONSTRUCT STORMWATER MANAGEMENT BASINS
8. INSTALL SILT FENCE AROUND BASINS
9. ROUGH GRADE SITE
10. IMPORT CLEAN FILL FOR REPLACEMENT AND BALANCE
11. INSTALL UTILITIES
12. INSTALL BUILDING FOUNDATIONS
13. INSTALL CURB AND GUTTER
14. INSTALL PAVEMENTS AND WALKS
15. INSTALL SMALL UTILITIES (GAS, PHONE, ELECTRIC, CABLE, ETC.)
16. FINAL GRADE SITE
17. REMOVE ACCUMULATED SEDIMENT FROM BASINS
18. CONSTRUCT INFILTRATION BASIN
19. SEED AND MULCH
20. WHEN ALL CONSTRUCTION ACTIVITY IS COMPLETE AND THE SITE IS STABILIZED, REMOVE SILT FENCE AND RESEED ANY AREAS DISTURBED BY THE REMOVAL.

3. SITE DATA:

AREA OF DISTURBANCE:	±52.313 AC
PRE-CONSTRUCTION IMPERVIOUS AREA:	±0.0 AC
POST-CONSTRUCTION IMPERVIOUS AREA:	±16.6 AC

GENERAL SOIL TYPE: SEE GEOTECHNICAL REPORT IN SPECIFICATIONS

4. THE LOCATION OF AREAS NOT TO BE DISTURBED MUST BE IDENTIFIED WITH FLAGS, STAKES, SIGNS, SILT FENCE, ETC. BEFORE CONSTRUCTION BEGINS.

5. ALL DISTURBED GROUND LEFT INACTIVE FOR SEVEN (7) OR MORE DAYS SHALL BE STABILIZED BY SEEDING OR SODDING (ONLY AVAILABLE PRIOR TO SEPTEMBER 15) OR BY MULCHING OR COVERING OR OTHER EQUIVALENT CONTROL MEASURE. AT A RATE OF 1.5 TIMES STANDARD SEEDING FINAL STABILIZATION TO BE DONE PER LANDSCAPE PLAN, SEE SHEET L1-1.

6. ON SLOPES 3:1 OR GREATER MAINTAIN SHEET FLOW AND MINIMIZE RILLS AND/OR GULLIES, SLOPE LENGTHS CAN NOT BE GREATER THAN 75 FEET.
ALL 3:1 SLOPES TO BE STABILIZED WITH EROSION CONTROL BLANKET

7. ALL STORM DRAINS AND INLETS MUST BE PROTECTED UNTIL ALL SOURCES OF POTENTIAL DISCHARGE ARE STABILIZED.

8. TEMPORARY SOIL STOCKPILES MUST HAVE EFFECTIVE SEDIMENT CONTROL AND CAN NOT BE PLACED IN SURFACE WATERS OR STORM WATER CONVEYANCE SYSTEMS. TEMPORARY STOCKPILES WITHOUT SIGNIFICANT AMOUNT OF SILT, CLAY, OR ORGANIC COMPOUNDS ARE EXEMPT EX: CLEAN AGGREGATE STOCK PILES, DEMOLITION CONCRETE STOCKPILES, SAND STOCKPILES.

9. SEDIMENT LADEN WATER MUST BE DISCHARGED TO A SEDIMENTATION BASIN WHENEVER POSSIBLE. IF NOT POSSIBLE, IT MUST BE TREATED WITH THE APPROPRIATE BMP'S.

10. SOLID WASTE MUST BE DISPOSED OF PROPERLY AND MUST COMPLY WITH MPCA DISPOSAL REQUIREMENTS.

11. THE WATERSHED DISTRICT OR THE CITY MAY HAVE REQUIREMENTS FOR INSPECTIONS OR AS-BUILT DRAWINGS VERIFYING PROPER CONSTRUCTION OF THE BMPS.

12. THE OWNER WHO SIGNS THE NPDES PERMIT APPLICATION IS A PERMITTEE AND IS RESPONSIBLE FOR COMPLIANCE WITH ALL TERMS AND CONDITIONS OF THE PERMIT. THE OPERATOR (CONTRACTOR) WHO SIGNS THE NPDES PERMIT APPLICATION IS A PERMITTEE FOR PARTS II.B., PART II.C, PART II.B-F, PART V, PART IV AND APPLICABLE CONSTRUCTION ACTIVITY REQUIREMENTS FOUND IN APPENDIX A, PART C. OF THE NPDES PERMIT AND IS JOINTLY RESPONSIBLE WITH THE OWNER FOR COMPLIANCE WITH THOSE PORTIONS OF THE PERMIT.

13. TERMINATION OF COVERAGE-PERMITTEE(S) WISHING TO TERMINATE COVERAGE MUST SUBMIT A NOTICE OF TERMINATION (NOT) TO THE MPCA. ALL PERMITTEE(S) MUST SUBMIT A NOT WITHIN 30 DAYS AFTER ONE OR MORE OF THE FOLLOWING CONDITIONS HAVE BEEN MET:

A. FINAL STABILIZATION, PER NPDES PERMIT PART IV.G. HAS BEEN ACHIEVED ON ALL PORTIONS OF THE SITE FOR WHICH THE PERMITTEE IS RESPONSIBLE.
B. TRANSFER OF OWNERSHIP AS DESCRIBED IN THE PERMIT.

15. INSPECTIONS
A. INITIAL INSPECTION FOLLOWING SILT FENCE INSTALLATION BY CITY REPRESENTATIVE IS REQUIRED.
B. EXPOSED SOIL AREAS: ONCE EVERY 7 DAYS AND WITHIN 24 HOURS FOLLOWING A RAINFALL EVENT GREATER THAN OR EQUAL TO 0.5" IN 24 HOURS.
C. STABILIZED AREAS: ONCE EVERY 30 DAYS
D. FROZEN GROUND: AS SOON AS RUNOFF OCCURS OR PRIOR TO RESUMING CONSTRUCTION.
E. INSPECTION AND MAINTENANCE RECORDS MUST BE RETAINED FOR 3 YEARS AFTER FILING OF THE NOTICE OF TERMINATION AND MUST INCLUDE: DATE AND TIME OF ACTION, NAME OF PERSON(S) CONDUCTING WORK, FINDING OF INSPECTIONS AND RECOMMENDATIONS FOR CORRECTIVE ACTION, DATE AND AMOUNT OF RAINFALL EVENTS GREATER THAN 0.5 INCHES IN A 24 HOUR PERIOD.

16. MINIMUM MAINTENANCE
A. SILT FENCE TO BE REPAIRED, REPLACED, SUPPLEMENTED WHEN NONFUNCTIONAL, OR 1/3 FULL; WITHIN 24 HOURS
B. SEDIMENT BASINS DRAINED AND SEDIMENT REMOVED WHEN REACHES 1/2 STORAGE VOLUME. REMOVAL MUST BE COMPLETE WITHIN 72 HOURS OF DISCOVERY.
C. SEDIMENT REMOVED FROM SURFACE WATERS WITHIN (7)SEVEN DAYS
D. CONSTRUCTION SITE EXITS INSPECTED, TRACKED SEDIMENT REMOVED WITH 24 HOURS.
E. PROVIDE COPIES OF EROSION INSPECTION RESULTS TO CITY ENGINEER FOR ALL RAIN EVENTS GREATER THAN 0.5" OVER 24 HOURS

17. THE SWPPP, INCLUDING ALL CHANGES TO IT, AND INSPECTIONS AND MAINTENANCE RECORDS MUST BE KEPT AT THE SITE DURING CONSTRUCTION ACTIVITY BY THE PERMITTEE(S) WHO HAVE OPERATIONAL CONTROL OF THE SITE.

18. OWNER MUST KEEP RECORDS OF ALL PERMITS REQUIRED FOR THE PROJECT, THE SWPPP, ALL INSPECTIONS AND MAINTENANCE, PERMANENT OPERATION AND MAINTENANCE AGREEMENTS, AND REQUIRED CALCULATIONS FOR TEMPORARY AND PERMANENT STORM WATER MANAGEMENT SYSTEMS. THESE RECORDS MUST BE RETAINED FOR THREE YEARS AFTER FILING NPDES NOTICE OF TERMINATION.

19. SWPPP MUST BE AMENDED WHEN:
A. THERE IS A CHANGE IN DESIGN, OPERATION, MAINTENANCE, WEATHER OR SEASONAL CONDITIONS THAT HAS A SIGNIFICANT EFFECT ON DISCHARGE
B. INSPECTIONS INDICATE THAT THE SWPPP IS NOT EFFECTIVE AND DISCHARGE IS EXCEEDING WATER QUALITY STANDARDS.
C. THE BMP'S IN THE SWPPP ARE NOT CONTROLLING POLLUTANTS IN DISCHARGES OR IS NOT CONSISTENT WITH THE TERMS AND CONDITIONS OF THE PERMIT.
D. AT ANY TIME AFTER PERMIT COVERAGE IS EFFECTIVE, THE MPCA MAY DETERMINE THAT THE PROJECT'S STORMWATER DISCHARGES MAY CAUSE, HAVE REASONABLE POTENTIAL TO CAUSE, OR CONTRIBUTE TO NON-ATTAINMENT OF ANY APPLICABLE WATER QUALITY STANDARD, OR THAT THE SWPPP DOES NOT INCORPORATE THE APPLICABLE REQUIREMENTS IN PART III.A.8., (IMPAIRED WATERS AND TMDLS). IF A WATER QUALITY STANDARD CHANGES DURING THE TERM OF THIS PERMIT, THE MPCA WILL AKE A DETERMINATION AS TO WHETHER A MODIFICATION OF THE SWPPP IS NECESSARY TO ADDRESS THE NEW STANDARD. IF THE MPCA MAKES SUCH DETERMINATION(S) OR ANY OF THE DETERMINATIONS IN PARTS III.B.1.-3., THE MPCA WILL NOTIFY THE PERMITTEE(S) IN WRITING. IN RESPONSE, THE PERMITTEE(S) MUST AMEND THE SWPPP TO ADDRESS THE IDENTIFIED CONCERNS AND SUBMIT INFORMATION REQUESTED BY THE MPCA, WHICH MAY INCLUDE AN INDIVIDUAL PERMIT APPLICATION. IF THE MPCA'S WRITTEN NOTIFICATION REQUIRES A RESPONSE, FAILURE TO RESPOND WITHIN THE SPECIFIED TIMEFRAME CONSTITUTES A PERMIT VIOLATION.

20. CONCRETE WASHOUT AREA
A. CONTRACTOR TO PROVIDE PREFABRICATED CONCRETE WASH-OUT CONTAINER WITH RAIN PROTECTION PER PLAN.
B. CONCRETE WASH-OUT TO BE IDENTIFIED WITH SIGNAGE STATING "CONCRETE WASHOUT AREA DO NOT OVERFILL".
C. CONCRETE WASHOUT WATER NEEDS TO BE PUMPED WITHIN 24 HOURS OF STANDING WATER IN WASHOUT AREA.

21. IN THE EVENT OF ENCOUNTERING A WELL OR SPRING DURING CONSTRUCTION CONTRACTOR TO CEASE CONSTRUCTION ACTIVITY AND NOTIFY ENGINEER.

22. PIPE OUTLETS MUST BE PROVIDED WITH TEMPORARY OR PERMANENT ENERGY DISSIPATION WITHIN 24 HOURS AFTER CONNECTION TO A SURFACE WATER.

23. TEMPORARY AND PERMANENT SOIL STABILIZATION
A. TEMPORARY SOIL STABILIZATION MEASURES SHALL CONSIST OF SEEDING.
B. PERMANENT SOIL STABILIZATION SHALL CONSIST OF HYDRO MULCH OR STRAW MULCH.
C. 7 DAY STABILIZATION TIME FRAME IS REQUIRED FOR ALL EXPOSED SOILS THAT ARE DORMANT OR NOT BEING WORKED WITHIN THE 7 DAY WINDOW.

24. FINAL STABILIZATION
FINAL STABILIZATION REQUIRES THAT ALL SOIL DISTURBING ACTIVITIES HAVE BEEN COMPLETED AND THAT DISTURBED AREAS ARE STABILIZED BY A UNIFORM PERENNIAL VEGETATIVE COVER WITH 70% OF THE EXPECTED FINAL DENSITY, AND THAT ALL PERMANENT PAVEMENTS HAVE BEEN INSTALLED. ALL TEMPORARY BMP'S SHALL BE REMOVED, DITCHES STABILIZED, AND SEDIMENT SHALL BE REMOVED FROM PERMANENT CONVEYANCES AND SEDIMENTATION BASINS IN ORDER TO RETURN THE POND TO DESIGN CAPACITY.

24. TEMPORARY SEDIMENTATION BASINS
A. THE TEMPORARY SEDIMENTATION BASINS SHALL BE CONSTRUCTED AND MADE OPERATIONAL PRIOR TO DISTURBANCE OF 10 OR MORE ACRES DRAINING TO A COMMON LOCATION.
B. TEMPORARY SEDIMENTATION BASINS ARE REQUIRED PRIOR TO RUNOFF LEAVING THE CONSTRUCTION SITE OR ENTERING SURFACE WATERS WHEN 5 OR MORE ACRES OF DISTURBED SOILS DRAIN TO A COMMON LOCATION, SINCE THE SITE IS WITHIN ONE MILE OF IMPAIRED WATER BODY. THE BASIN MUST PROVIDE 3,600 CUBIC FEET OF STORAGE BELOW THE OUTLET PER ACRE DRAINED. IF HYDRAULIC CALCULATIONS ARE AVAILABLE, THE TEMPORARY SEDIMENTATION BASIN MUST PROVIDE A STORAGE VOLUME EQUIVALENT TO THE 2-YEAR, 24-HOUR STORM, BUT IN NO CASE LESS THAN 1800 CUBIC FEET PER ACRE DRAINED. THE TEMPORARY SEDIMENTATION BASIN MUST BE CONSTRUCTED AND MADE OPERATIONAL CONCURRENT WITH THE START OF SOIL DISTURBANCE UP GRADIENT OF THE POND. THE TEMPORARY SEDIMENTATION BASIN SHALL BE DESIGNED TO PREVENT SHORT CIRCUITING. THE OUTFALL SHALL BE DESIGNED TO REMOVE FLOATABLE DEBRIS, ALLOW FOR COMPLETE DRAWDOWN OF THE POND FOR MAINTENANCE ACTIVITIES, AND HAVE ENERGY DISSIPATION. THE EMERGENCY SPILLWAY SHALL BE STABILIZED.
C. TEMPORARY SEDIMENTATION BASINS SHALL BE SITUATED OUTSIDE OF SURFACE WATERS AND ANY REQUIRED BUFFER ZONE, AND MUST BE DESIGNED TO AVOID DRAINING WETLANDS, UNLESS THE IMPACT IS IN COMPLIANCE WITH THE REQUIREMENTS OF THIS PERMIT.
D. EXCESSIVE SEDIMENT-LADEN WATER THAT IS NOT PROPERLY FILTERED WILL NOT BE PERMITTED TO DISCHARGE FROM SITE.

25. DEWATERING AND BASIN DRAINING
A. TURBID OR SEDIMENT-LADEN WATERS RELATED TO DEWATERING OR BASIN DRAINING SHALL BE DISCHARGED TO A TEMPORARY OR PERMANENT SEDIMENTATION BASIN ON THE PROJECT SITE UNLESS INFEASIBLE. THE TEMPORARY OR PERMANENT BASIN MAY DISCHARGE TO SURFACE WATERS IF THE BASIN WATER HAS BEEN VISUALLY CHECKED TO ENSURE ADEQUATE TREATMENT HAS BEEN OBTAINED IN THE BASIN AND THAT THE NUISANCE CONDITIONS WILL NOT RESULT FROM THE DISCHARGE. DISCHARGE POINTS SHALL BE ADEQUATELY PROTECTED FROM EROSION AND PROPER VELOCITY DISSIPATION PROVIDED.
B. ALL WATER FROM DEWATERING OR BASIN-DRAINING ACTIVITIES MUST BE DISCHARGED IN A MANNER THAT DOES NOT CAUSE NUISANCE CONDITIONS, EROSION IN THE RECEIVING CHANNELS OR ON DOWN SLOPE PROPERTIES, OR INUNDATION IN WETLANDS CAUSING SIGNIFICANT ADVERSE IMPACTS TO THE WETLAND.
C. IF FILTERS WITH BACKWASH WATERS ARE USED, THE BACKWASH WATER SHALL BE HAULED AWAY FOR DISPOSAL, RETURNED TO THE BEGINNING OF THE TREATMENT PROCESS, OR INCORPORATED INTO SITE IN A MANNER THAT DOES NOT CAUSE EROSION. BACKWASH WATER MAY BE DISCHARGED TO SANITARY SEWER IF PERMISSION IS GRANTED BY THE SANITARY SEWER AUTHORITY.

26. POLLUTION PREVENTION
A. BUILDING PRODUCTS THAT HAVE THE POTENTIAL TO LEACH POLLUTANTS MUST BE UNDER COVER TO PREVENT DISCHARGE OR PROTECTED BY AN EFFECTIVE MEANS DESIGNED TO MINIMIZE CONTACT WITH STORMWATER.
B. PESTICIDES, HERBICIDES, INSECTICIDES, FERTILIZERS, TREATMENT CHEMICALS, AND LANDSCAPE MATERIALS MUST BE UNDER COVER.
C. HAZARDOUS MATERIALS AND TOXIC WASTE CONTAINER MUST BE PROVIDED TO PREVENT VANDALISM.
D. SOLID WASTE MUST BE STORED, COLLECTED AND DISPOSED OF IN COMPLIANCE WITH MINN. R. CH 7035.
E. PORTABLE TOILETS MUST BE POSITIONED SO THAT THEY ARE SECURE AND WILL NOT BE TIPPED OR KNOCKED OVER. SANITARY WASTE MUST BE DISPOSED OF PROPERLY IN ACCORDANCE WITH MINN. R. CH 7041.
F. DISCHARGE OF SPILLED OR LEAKED CHEMICALS, INCLUDING FUEL, FROM ANY AREA WHERE CHEMICALS OR FUEL WILL BE LOADED OR UNLOADED SHALL BE PREVENTED USING DRIP PANS OR ABSORBENTS. SUPPLIES SHALL BE AVAILABLE AT ALL TIMES TO CLEAN UP DISCHARGED MATERIALS AND THAT AN APPROPRIATE DISPOSAL METHOD MUST BE AVAILABLE FOR RECOVERED SPILLED MATERIALS.

27. DESIGN CALCULATIONS
TEMPORARY & PERMANENT STORMWATER TREATMENT ARE DESIGNED TO MEET MPCA GENERAL & SPECIAL WATER REQUIREMENTS. CALCULATIONS ARE PART OF THE HYDROLOGY REPORT, WHICH IS TO BE CONSIDERED PART OF THE SWPPP DOCUMENTS. SEE HYDROLOGY REPORT FOR ADDITIONAL INFORMATION.

28. GENERAL STORMWATER DISCHARGE REQUIREMENTS
ALL REQUIREMENTS LISTED IN PART III OF THE PERMIT FOR DESIGN OF THE PERMANENT STORMWATER MANAGEMENT SYSTEM AND DISCHARGE HAVE BEEN INCLUDED IN THE PREPARATION OF THIS SWPPP. THESE INCLUDE BUT ARE NOT LIMITED TO:
A. THE EXPECTED AMOUNT, FREQUENCY, INTENSITY, AND DURATION PRECIPITATION.
B. THE NATURE OF STORMWATER RUNOFF AND RUN-ON AT THE SITE.
C. PEAK FLOW RATES AND STORMWATER VOLUMES TO MINIMIZE EROSION AT OUTLETS AND DOWNSTREAM CHANNEL AND STREAM BANK EROSION.
D. THE RANGE OF SOIL PARTICLE SIZES EXPECTED TO BE PRESENT ON THE SITE.

29. CONSTRUCTION OF FILTRATION BASINS
A. NO HEAVY TRAFFIC ON FILTRATION AREAS. CONSTRUCTION TO BE DONE WITH MINIMAL COMPACTION TO FILTRATION AREAS. IF COMPACTION IS ENCOUNTERED, BASIN SOILS MUST BE REMOVED & RELAID.
B. INFILTRATION SYSTEMS MUST NOT BE EXCAVATED TO FINAL GRADE UNTIL THE CONTRIBUTING DRAINAGE AREA HAD BEEN CONSTRUCTED AND FULLY STABILIZED UNLESS RIGOROUS EROSION PREVENTION AND SEDIMENT CONTROLS ARE PROVIDED(PART III.D.1.C.).
C. WHEN AN INFILTRATION SYSTEM IS EXCAVATED TO FINAL GRADE (OR WITHIN THREE (3) FEET OF FINAL GRADE), THE PERMITTEE(S) MUST EMPLOY RIGOROUS EROSION PREVENTION AND SEDIMENT CONTROLS (E.G., DIVERSION BERMS) TO KEEP SEDIMENT AND RUNOFF COMPLETELY AWAY FROM THE INFILTRATION AREA. THE AREA MUST BE STAKED OFF AND MARKED SO THAT HEAVY CONSTRUCTION VEHICLES OR EQUIPMENT WILL NOT COMPACT THE SOIL IN THE PROPOSED INFILTRATION AREA.
D. TO PREVENT CLOGGING OF THE INFILTRATION OR FILTRATION SYSTEM, THE PERMITTEE(S) MUST USE A PRETREATMENT DEVICE SUCH AS A VEGETATED FILTER STRIP, SMALL SEDIMENTATION BASIN, OR WATER QUALITY INLET (E.G., GRIT CHAMBER) TO SETTLE PARTICULATES BEFORE THE STORMWATER DISCHARGES INTO THE INFILTRATION OF FILTRATION SYSTEM.

30. POST CONSTRUCTION
THE WATER QUALITY VOLUME THAT MUST BE RETAINED ON SITE BY THE PROJECT'S PERMANENT STORMWATER MANAGEMENT SYSTEM DESCRIBED IN PART III.D. SHALL BE ONE (1) INCH OF RUNOFF FROM THE NEW IMPERVIOUS SURFACES CREATED BY THE PROJECT. SEE PART III.D.1. FOR MORE INFORMATION ON INFILTRATION DESIGN, PROHIBITIONS AND APPROPRIATE SITE CONDITIONS.

31. RESPONSIBILITIES
A. THE OWNER MUST IDENTIFY A CONTRACTOR WHO WILL OVERSEE THE SWPPP IMPLEMENTATION AND THE PERSON RESPONSIBLE FOR INSPECTION AND MAINTENANCE:
B. THE OWNER MUST IDENTIFY THE A PERSON WHO WILL BE RESPONSIBLE FOR LONG TERM OPERATIONS AND MAINTENANCE OF THE PERMANENT STORMWATER MANAGEMENT SYSTEM:

32. TRAINING REQEMENTS
THE PERMITTES(S) SHALL ENSURE THE FOLLOWING INDIVIDUALS IDENTIFIED IN THIS PART HAVE BEEN TRAINED IN ACCORDANCE WITH THIS PERMIT'S TRAINING REQUIREMENTS.
A. WHO MUST BE TRAINED:
1. INDIVIDUAL(S) PREPARING THE SWPPP FOR THE PROJECT
2. INDIVIDUAL(S) OVERSEEING IMPLEMENTATION OF, REVISING, AND AMENDING THE SWWP AND INDIVIDUALS(S) PERFORMING INSPECTIONS AS REQUIRED IN PART IV.E. ONE OF THESE INDIVDUAL(S) MUST BE AVAILABLE FOR AN ONSITE INSPECTION WITHIN 72 HOURS UPON REQUEST BY THE MPCA.
3. INDIVIDUAL(S) PERFORMING OR SUPERVISING THE INSTALLATION, MAINTENANCE AND REPAIR OF BMPS. AT LEAST ONE INDIVIDUAL ON A PROJECT MUST BE TRAINED IN THE JOB DUTIES.
B. TRAINING CONTENT:
1. THE CONTENT AND EXTENT OF TRAINING MUST BE COMMENSURATE WITH THE INDIVIDUAL'S JOB DUTIES AND RESPONSIBILITIES WITH REGARD TO ACTIVITIES COVERED UNDER THIS PERMIT FOR THE PROJECT. AT LEAST ONE INDIVIDUAL PRESENT ON THE PERMITTED PROJECT SITE (OR AVAILABLE TO THE PROJECT SITE IN 72 HOURS) MUST BE TRAINED IN THE JOB DUTIES DESCRIBED IN PART III.F.1.B. AND PARTIII.F.1.C.
C. THE PERMITTEE(S) SHALL ENSURE THAT THE INDIVIDUALS ARE TRAINED BY LOCAL, STATE, FEDERAL AGENCIES, PROFESSIONAL OR OTHER ENTITIES WITH EXPERTISE IN EROSION PREVENTION, SEDIMENT CONTROL, PERMANENT STORMWATER MANAGEMENT AND THE MINNESOTA NPDES/SDS CONSTRUCTION STORMWATER PERMIT. AN UPDATE REFESHER-TRAINING MUST BE ATTENDED EVERY THREE (3) YEARS STARTING THREE (3) YEARS FROM THE ISSUANCE DATE OF THIS PERMIT.

LIST OF CONTACTS

TILE	CONTACT	COMPANY	PHONE NUMBER
OWNER	DENNIS BACKES	BACKES COMPANIES	612-369-7750
PROJECT MANAGER	TODD MCLOUTH	LOUCKS	763-496-6742
SWPPP DESIGNER	ZACH WEBBER	LOUCKS	763-496-6753
CONTRACTOR	TBD		
SITE MANAGER	TBD		

* MPCA 24HR. HAZARDOUS SPILL HOTLINE: 651-649-5457 OF 80420798

EROSION CONTROL NOTES

1. ALL STREETS IN AND ADJACENT TO THE PROJECT SHALL REMAIN CLEAN AND PASSABLE AT ALL TIMES.
2. A STABILIZED CONSTRUCTION ENTRANCE WILL BE PLACED AT ALL ENTRANCES THAT LEAD TO THE PROJECT SITE IN ACCORDANCE WITH THE STORMWATER POLLUTION PREVENTION PLAN AND THE APPROVED DETAILS.
3. SEDIMENT CONTROLS MUST BE IN PLACE AND APPROVED BY THE ENGINEER BEFORE ANY PHASE OF CONSTRUCTION CAN BEGIN.
4. INLET PROTECTION WILL BE INSTALLED AT ALL CATCH BASINS WITHIN THE PROJECT AREA PER STANDARD DETAILS UNTIL THE SITE IS STABILIZED.
5. PIPE OUTLETS MUST BE PROVIDED WITH TEMPORARY OR PERMANENT ENERGY DISSIPATION WITHIN 24 HOURS AFTER CONNECTION TO SURFACE WATER.
6. STABILIZATION OF DISTURBED AREAS SHALL BE DONE BY PERMANENT TURF ESTABLISHMENT WHENEVER POSSIBLE.
7. IN THE EVENT THAT PERMANENT STABILIZATION CANNOT BE IMPLEMENTED WITHIN 7 DAYS AFTER CONSTRUCTION ACTIVITY IN THE DISTURBED AREA HAS CEASED, TEMPORARY STABILIZATION BMPS MUST BE SCHEDULED TO OCCUR WITHIN THAT 7 DAY TIME FRAME RAPID STABILIZATION METHOD 4 SHALL BE EMPLOYED WITHIN 200 FEET OF THE NORMAL WETTED PERIMETER OF ALL DISCHARGE POINTS WITHIN 24 HOURS.
8. ALL STOCKPILES MUST HAVE PERIMETER SEDIMENT CONTROL IMPLEMENTED AND MAINTAINED AT ALL TIMES. STOCKPILES SHALL RECEIVE TEMPORARY STABILIZATION IF UNWORKED FOR 7 DAYS.
9. CONCRETE SLURRY FROM REMOVAL OPERATIONS MUST BE VACUUMED UP IMMEDIATELY. NO CONCRETE WASHOUT SHALL COME IN CONTACT WITH THE GROUND AND MUST BE PROPERLY DISPOSED OF.
10. ADDITIONAL EROSION AND SEDIMENT CONTROL MAY BE ADDED DURING ANY PHASE OF CONSTRUCTION AS DIRECTED BY THE ENGINEER.
11. CONTRACTOR MUST SUBMIT A DEWATERING PLAN TO THE ENGINEER FOR APPROVAL 10 DAYS PRIOR TO ANY DEWATERING ON SITE. THE PLAN MUST INCLUDE A DEWATERING SYSTEM PRIOR TO DISCHARGING INTO RECEIVING WATER. THE DEWATERING PLAN MUST ENSURE THAT THE DISCHARGE WATER IS FREE OF SEDIMENT AND TURBID WATER IN ACCORDANCE WITH THE PROJECT SPEC. THE DEWATERING PLAN MUST ALSO INCLUDE A COMPONENT FOR ONSITE TESTING AND MONITORING OF TURBIDITY AND PH.
12. RAPID STABILIZATION #4 WITH CATEGORY 3N BLANKET ON SIDE SLOPES 3:1 OR STEEPER.
13. TEMPORARY OR PERMANENT STABILIZATION AND DOWN GRADIENT PERIMETER SEDIMENT CONTROL IS NEEDED ON ROW, CURB, AND GUTTER LINE.

PERMANENT STORMWATER MANAGEMENT

	INFILTRATION
	STORMWATER HARVEST AND REUSE
X	FILTRATION
X	WET SEDIMENTATION BASIN
	REGIONAL PONDING

RECEIVING WATERS

NAME OF WATER BODY	TYPE OF WATER BODY	SPECIAL WATER	IMAIRED WATER	TYPE OF SPECIAL WATER
CROW RIVER	RIVER	NO	YES	

*7 DAY STABILIZATION TIME FRAME REQUIRED

ESTIMATED QUANTITIES

DESCRIPTION	UNIT	QUANTITY
TEMPORARY ROCK CONSTRUCTION ENTRANCE	EA	3
SILT FENCE (STANDARD)	LF	±11,590
STAGE 2 SILT FENCE (STANDARD)	LF	±3,355
INLET PROTECTION	EA	42
WOODFIBER BLANKET	SY	.
CONCRETE WASHOUT	EA	.
BIOROLL	LF	±15,465

UNIVERSITY OF MINNESOTA
Zachary Webber
Design of Construction SWPPP (May 31 2018)

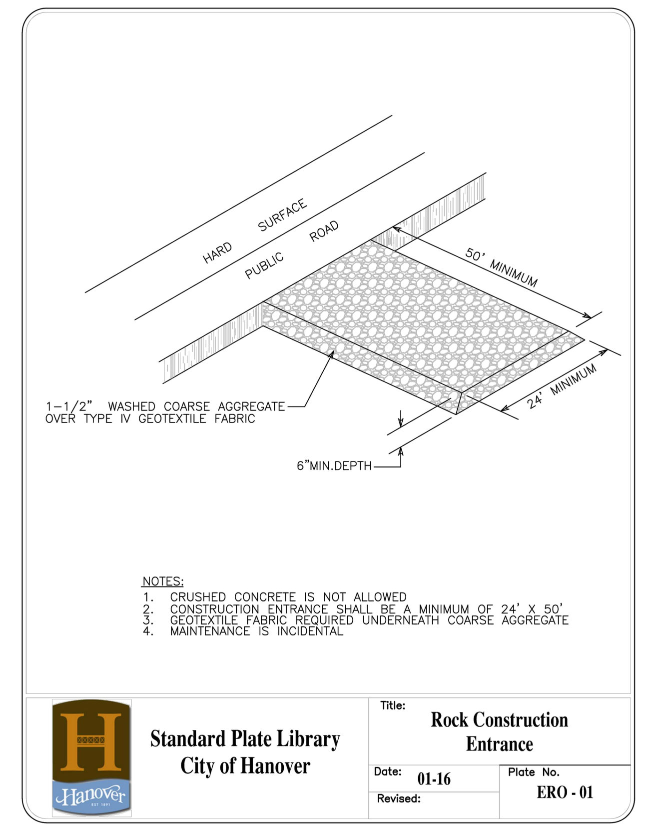

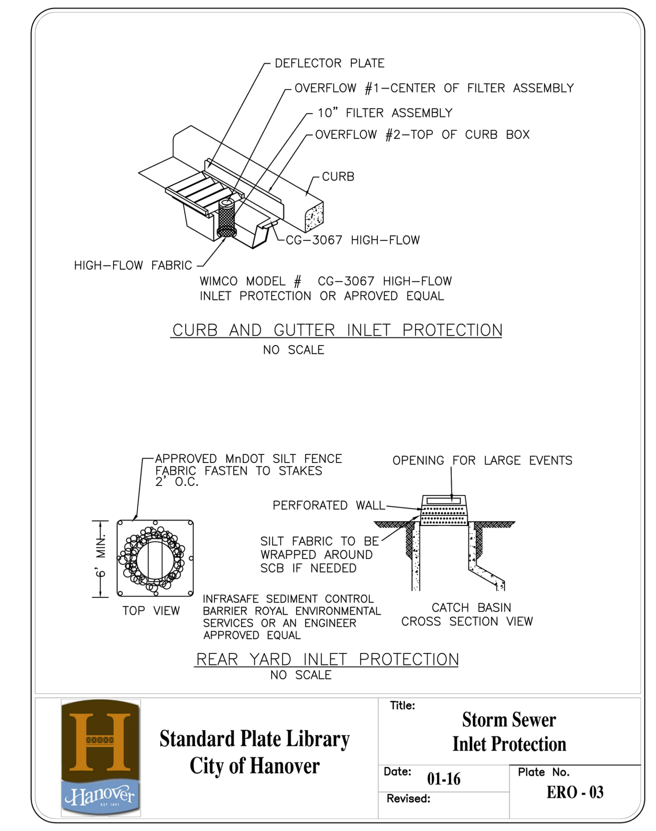

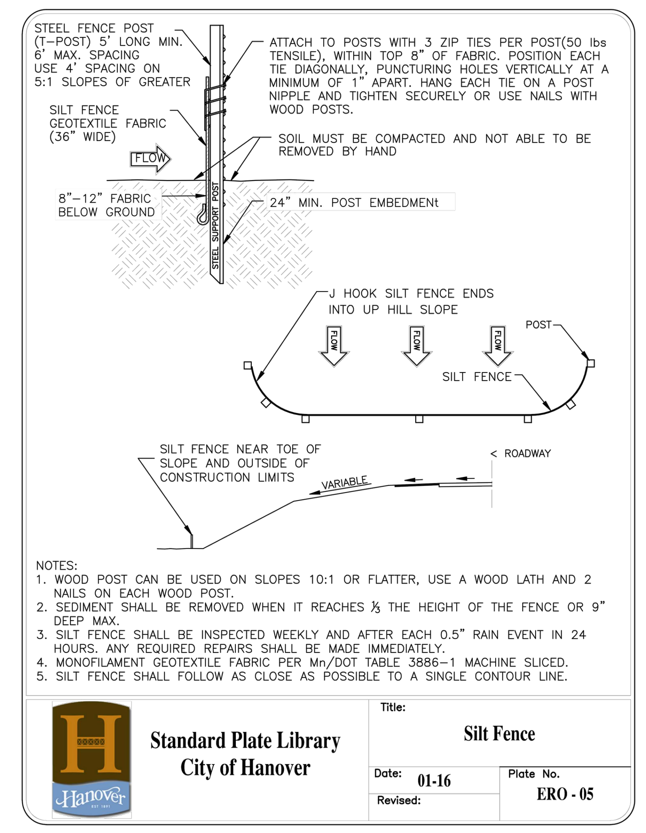

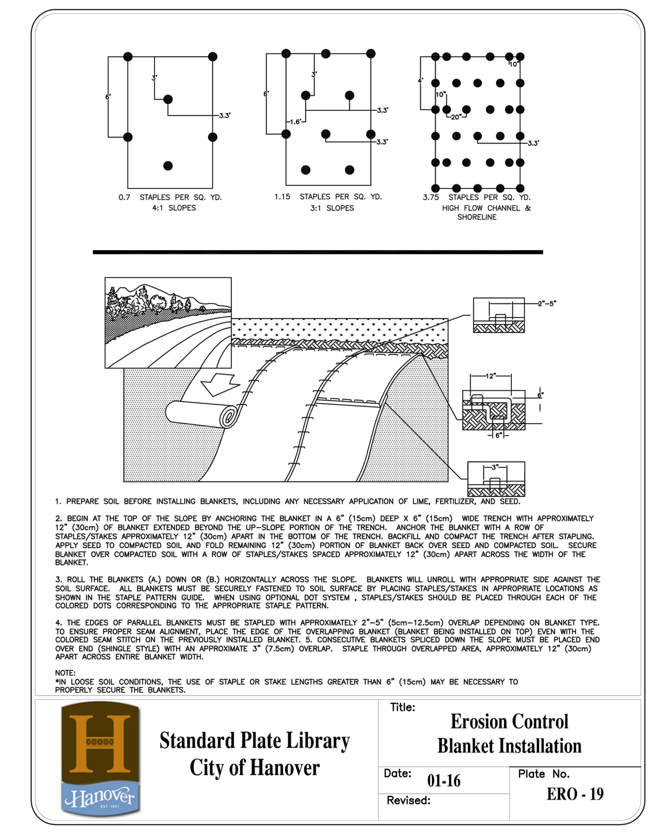

SPECIAL AND IMPAIRED WATERS MAP

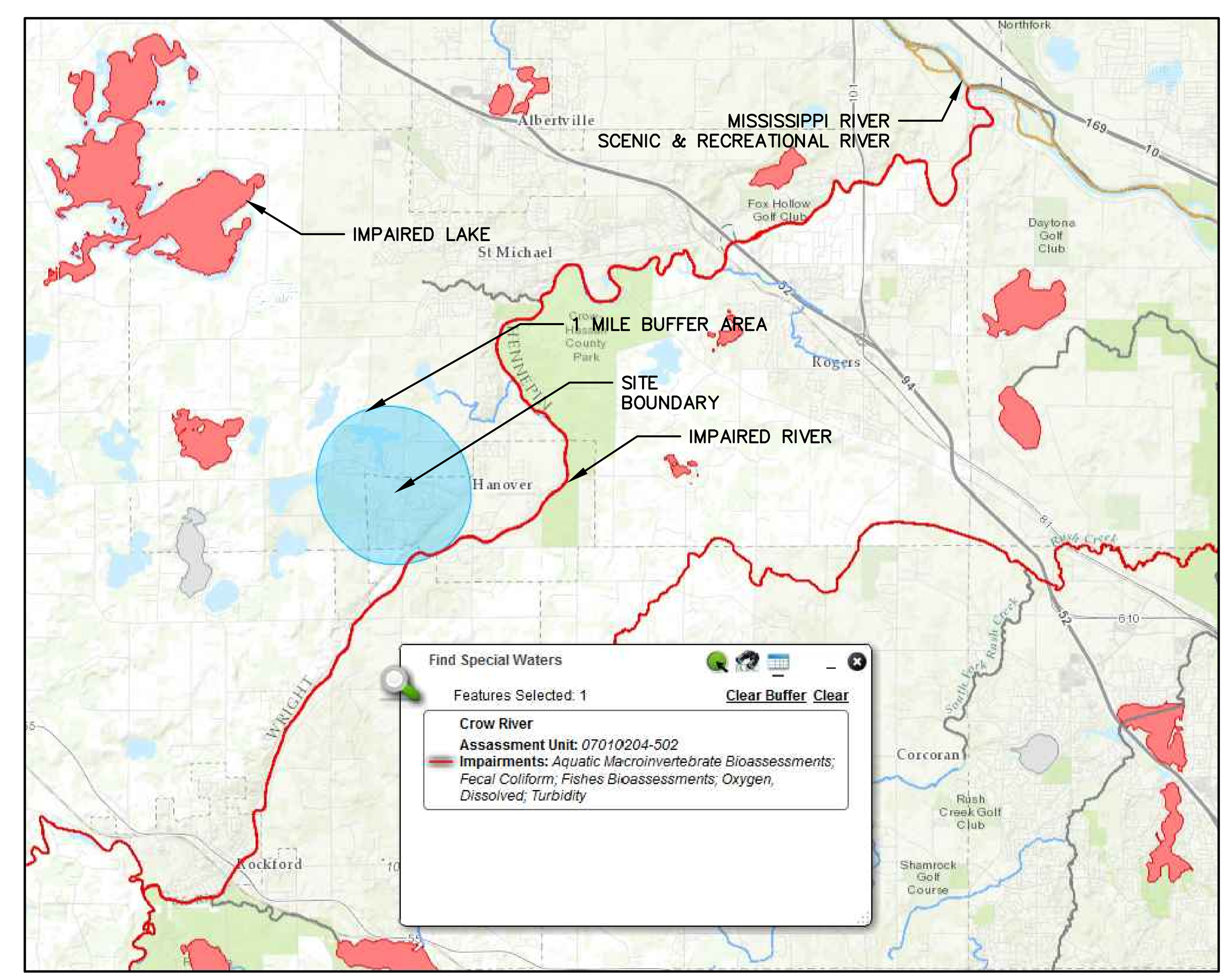

CROW RIVER HEIGHTS WEST FUTURE ADD.
HANOVER, MN

BACKES COMPANIES
11413 ASHBURY CIRCLE N.
CHAMPLIN, MN 55316
PHONE: (612) 369-7750
FAX (612) 566-1525

LOUCKS
PLANNING
CIVIL ENGINEERING
LAND SURVEYING
LANDSCAPE ARCHITECTURE
ENVIRONMENTAL
7200 Hemlock Lane, Suite 300
Maple Grove, MN 55369
763.424.5505
www.loucksinc.com

CADD QUALIFICATION
CADD files prepared by the Consultant for this project are instruments of the Consultant professional services for use solely with respect to this project. These CADD files shall not be used on other projects, for additions to this project, or for completion of this project by others without written approval by the Consultant. With the Consultant's approval, others may be permitted to obtain copies of the CADD drawing files for information and reference only. All intentional or unintentional revisions, additions, or deletions to these CADD files shall be made at the full risk of that party making such revisions, additions or deletions and that party shall hold harmless and indemnify the Consultant from any & all responsibilities, claims, and liabilities.

SUBMITTAL/REVISIONS

04/20/18	CITY SUBMITTAL
05/24/18	CITY COMMENTS

PROFESSIONAL SIGNATURE
I hereby certify that this plan, specification or report was prepared by me or under my direct supervision and that I am a duly Licensed Professional Engineer under the laws of the State of Minnesota.

PRELIMINARY

Todd W. McLouth - PE
License No. 20383
Date

QUALITY CONTROL

Loucks Project No.	16101A
Project Lead	TWM
Drawn By	ZHW
Checked By	TWM
Review Date	05/24/18

SHEET INDEX

C0-1	COVER SHEET
C1-1	EXISTING CONDITIONS
C1-2	PRELIMINARY PLAT
C2-0 - C2-2	SITE PLAN
C3-0 - C3-2	GRADING PLAN
C3-3 - C3-5	SWPPP PLAN & NOTES
C4-0 - C4-2	UTILITY PLAN
C8-1 - C8-2	DETAILS
L0-1 - L0-3	TREE PRESERVATION
L0-4	TREE INVENTORY
L1-1 - L1-2	LANDSCAPE PLANS
L2-1	LANDSCAPE DETAILS

SWPPP NOTES
C3-5

Plotted: 05 /25 / 2018 11:55 AM W:\2016\16101A\CADD DATA\CIVIL_dwg Sheet Files\C3-3 SWPPP

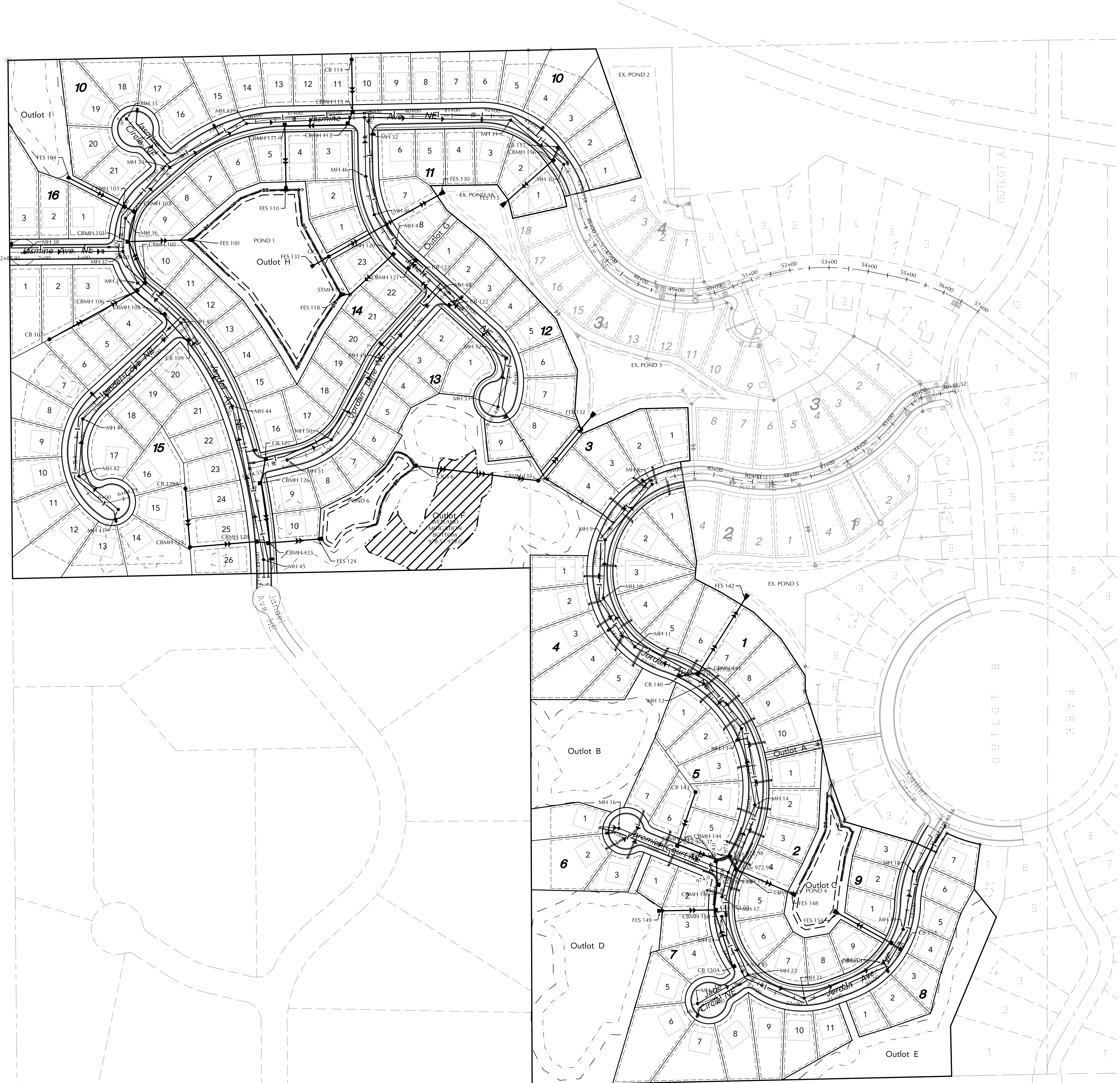

0 100 200
SCALE IN FEET

EXISTING	CIVIL LEGEND	PROPOSED
	SANITARY MANHOLE	
	STORM MANHOLE	
	CATCH BASIN	
	CULVERT	
	HYDRANT	
	GATEVALVE	
⊚PIV	POST INDICATOR VALVE	⊚PIV
	LIGHT POLE	
	POWER POLE	
	SIGN	
BM #3	BENCHMARK	
B-	SOIL BORINGS	B-
	WATER MANHOLE	
	TELEPHONE MANHOLE	
	UTILITY MANHOLE	
	ELECTRIC MANHOLE	
—W—	WATER SERVICE	
—S—	SANITARY SERVICE	
	HANDICAP PARKING	
1.0%	DIRECTION OF FLOW	1.0%
924.6 x	SPOT ELEVATION	924.6 x
924	CONTOURS	924
	SANITARY SEWER	
	STORM SEWER	
	WATERMAIN	
—FM—	FORCEMAIN	FM
—>>—DT—	DRAINTILE	—>>—DT—
	SILT FENCE	
	CURB & GUTTER	
	RETAINING WALL	
	TREELINE	
	EASEMENT LINE	
	SETBACK LINE	
—X—X—	FENCE LINE	—X—X—
—TEL—	UNDERGROUND TELE	
—GAS—	UNDERGROUND GAS	
—OH—	OVERHEAD UTILITY	

UTILITY NOTES

1. SEE CITY OF HANOVER GENERAL SPECIFICATIONS AND DETAIL PLATES FOR STREET AND UTILITY CONSTRUCTION.

CALL BEFORE YOU DIG!
Gopher State One Call
TWIN CITY AREA: 651-454-0002
TOLL FREE: 1-800-252-1166

WARNING:

THE CONTRACTOR SHALL BE RESPONSIBLE FOR CALLING FOR LOCATIONS OF ALL EXISTING UTILITIES. THEY SHALL COOPERATE WITH ALL UTILITY COMPANIES IN MAINTAINING THEIR SERVICE AND / OR RELOCATION OF LINES.

THE CONTRACTOR SHALL CONTACT GOPHER STATE ONE CALL AT 651-454-0002 AT LEAST 48 HOURS IN ADVANCE FOR THE LOCATIONS OF ALL UNDERGROUND WIRES, CABLES, CONDUITS, PIPES, MANHOLES, VALVES OR OTHER BURIED STRUCTURES BEFORE DIGGING. THE CONTRACTOR SHALL REPAIR OR REPLACE THE ABOVE WHEN DAMAGED DURING CONSTRUCTION AT NO COST TO THE OWNER.

CROW RIVER HEIGHTS WEST FUTURE ADD.

HANOVER, MN

BACKES COMPANIES
11413 ASHBURY CIRCLE N.
CHAMPLIN, MN 55316
PHONE: (612) 369-7750
FAX (612) 566-1525

LOUCKS
PLANNING
CIVIL ENGINEERING
LAND SURVEYING
LANDSCAPE ARCHITECTURE
ENVIRONMENTAL
7200 Hemlock Lane, Suite 300
Maple Grove, MN 55369
763.424.5505
www.loucksinc.com

CADD QUALIFICATION

CADD files prepared by the Consultant for this project are instruments of the Consultant professional services for use solely with respect to this project. These CADD files shall not be used on other projects, for additions to this project, or for completion of this project by others without written approval by the Consultant. With the Consultant's approval, others may be permitted to obtain copies of the CADD drawing files for information and reference only. All intentional or unintentional revisions, additions, or deletions to these CADD files shall be made at the full risk of that party making such revisions, additions or deletions and that party shall hold harmless and indemnify the Consultant from any & all responsibilities, claims, and liabilities.

SUBMITTAL/REVISIONS

04/20/18	CITY SUBMITTAL
05/24/18	CITY COMMENTS

PROFESSIONAL SIGNATURE

I hereby certify that this plan, specification or report was prepared by me or under my direct supervision and that I am a duly Licensed Professional Engineer under the laws of the State of Minnesota.

PRELIMINARY

Todd W. McLouth - PE
License No. 20383
Date

QUALITY CONTROL

Loucks Project No.	16101A
Project Lead	TWM
Drawn By	ZHW
Checked By	TWM
Review Date	05/24/18

SHEET INDEX

C0-1	COVER SHEET
C1-1	EXISTING CONDITIONS
C1-2	PRELIMINARY PLAT
C2-0 - C2-2	SITE PLAN
C3-0 - C3-2	GRADING PLAN
C3-3 - C3-5	SWPPP PLAN & NOTES
C4-0 - C4-2	UTILITY PLAN
C8-1 - C8-2	DETAILS
L0-1 - L0-3	TREE PRESERVATION
L0-4	TREE INVENTORY
L1-1 - L1-2	LANDSCAPE PLANS
L2-1	LANDSCAPE DETAILS

OVERALL UTILITY PLAN

C4-0

Plotted: 05 /25 / 2018 11:56 AM W:\2016\16101A\CADD DATA\CIVIL_dwg Sheet Files\C4-1 UTILITY PLAN

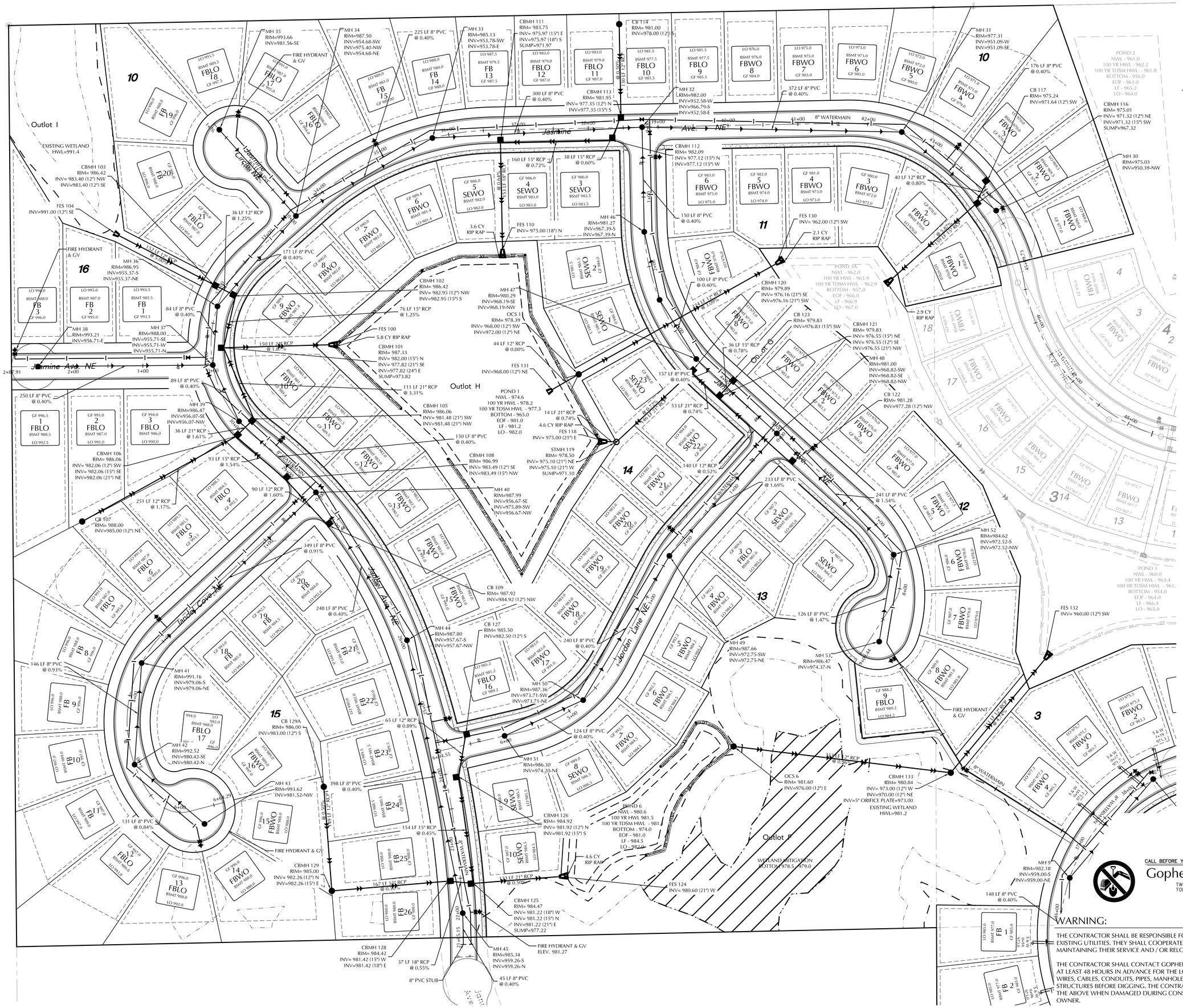

EXISTING	CIVIL LEGEND	PROPOSED
	SANITARY MANHOLE	
	STORM MANHOLE	
	CATCH BASIN	
	CULVERT	
	HYDRANT	
	GATEVALVE	
	POST INDICATOR VALVE	
	LIGHT POLE	
	POWER POLE	
	SIGN	
	BENCHMARK	
	SOIL BORINGS	
	WATER MANHOLE	
	TELEPHONE MANHOLE	
	UTILITY MANHOLE	
	ELECTRIC MANHOLE	
	WATER SERVICE	
	SANITARY SERVICE	
	HANDICAP PARKING	
	DIRECTION OF FLOW	
	SPOT ELEVATION	
	CONTOURS	
	SANITARY SEWER	
	STORM SEWER	
	WATERMAIN	
	FORCEMAIN	
	DRAINTILE	
	SILT FENCE	
	CURB & GUTTER	
	RETAINING WALL	
	TREELINE	
	EASEMENT LINE	
	SETBACK LINE	
	FENCE LINE	
	UNDERGROUND TELE	
	UNDERGROUND GAS	
	OVERHEAD UTILITY	

CALL BEFORE YOU DIG!

Gopher State One Call

TWIN CITY AREA: 651-454-0002
TOLL FREE: 1-800-252-1166

WARNING:

THE CONTRACTOR SHALL BE RESPONSIBLE FOR CALLING FOR LOCATIONS OF ALL EXISTING UTILITIES. THEY SHALL COOPERATE WITH ALL UTILITY COMPANIES IN MAINTAINING THEIR SERVICE AND / OR RELOCATION OF LINES.

THE CONTRACTOR SHALL CONTACT GOPHER STATE ONE CALL AT 651-454-0002 AT LEAST 48 HOURS IN ADVANCE FOR THE LOCATIONS OF ALL UNDERGROUND WIRES, CABLES, CONDUITS, PIPES, MANHOLES, VALVES OR OTHER BURIED STRUCTURES BEFORE DIGGING. THE CONTRACTOR SHALL REPAIR OR REPLACE THE ABOVE WHEN DAMAGED DURING CONSTRUCTION AT NO COST TO THE OWNER.

CROW RIVER HEIGHTS WEST FUTURE ADD.

HANOVER, MN

BACKES COMPANIES
11413 ASHBURY CIRCLE N.
CHAMPLIN, MN 55316
PHONE: (612) 369-7750
FAX (612) 566-1525

LOUCKS
PLANNING
CIVIL ENGINEERING
LAND SURVEYING
LANDSCAPE ARCHITECTURE
ENVIRONMENTAL
7200 Hemlock Lane, Suite 300
Maple Grove, MN 55369
763.424.5505
www.loucksinc.com

CADD QUALIFICATION

CADD files prepared by the Consultant for this project are instruments of the Consultant's professional services for use solely with respect to this project. These CADD files shall not be used on other projects, for additions to this project, or for completion of this project by others without written approval by the Consultant. With the Consultant's approval, others may be permitted to obtain copies of the CADD drawing files for information and reference only. All intentional or unintentional revisions, additions, or deletions to these CADD files shall be made at the full risk of that party making such revisions, additions or deletions and that party shall hold harmless and indemnify the Consultant from any & all responsibilities, claims, and liabilities.

SUBMITTAL/REVISIONS

04/20/18	CITY SUBMITTAL
05/24/18	CITY COMMENTS

PROFESSIONAL SIGNATURE

I hereby certify that this plan, specification, or report was prepared by me or under my direct supervision and that I am a duly Licensed Professional Engineer under the laws of the State of Minnesota.

PRELIMINARY

License or Reg. No. 20383
Date

QUALITY CONTROL

Loucks Project No.	16101A
Project Lead	TWM
Drawn By	ZHW
Checked By	TWM
Review Date	05/24/18

SHEET INDEX

C0-1	COVER SHEET
C1-1	EXISTING CONDITIONS
C1-2	PRELIMINARY PLAT
C2-0 - C2-2	SITE PLAN
C3-0 - C3-2	GRADING PLAN
C3-3 - C3-5	SWPPP PLAN & NOTES
C4-0 - C4-2	UTILITY PLAN
C8-1 - C8-2	DETAILS
L0-1 - L0-3	TREE PRESERVATION
L0-4	TREE INVENTORY
L1-1 - L1-2	LANDSCAPE PLANS
L2-1	LANDSCAPE DETAILS

NORTH UTILITY PLAN

C4-1

Plotted: 05/25/2018 11:56 AM W:\2016\16101A\CADD DATA\CIVIL dwg Sheet Files\C4-1 UTILITY PLAN

EXISTING	CIVIL LEGEND	PROPOSED
	SANITARY MANHOLE	
	STORM MANHOLE	
	CATCH BASIN	
	CULVERT	
	HYDRANT	
	GATEVALVE	
	POST INDICATOR VALVE	
	LIGHT POLE	
	POWER POLE	
	SIGN	
	BENCHMARK	
	SOIL BORINGS	
	WATER MANHOLE	
	TELEPHONE MANHOLE	
	UTILITY MANHOLE	
	ELECTRIC MANHOLE	
	WATER SERVICE	
	SANITARY SERVICE	
	HANDICAP PARKING	
	DIRECTION OF FLOW	
	SPOT ELEVATION	
	CONTOURS	
	SANITARY SEWER	
	STORM SEWER	
	WATERMAIN	
	FORCEMAIN	
	DRAINTILE	
	SILT FENCE	
	CURB & GUTTER	
	RETAINING WALL	
	TREELINE	
	EASEMENT LINE	
	SETBACK LINE	
	FENCE LINE	
	UNDERGROUND TELE	
	UNDERGROUND GAS	
	OVERHEAD UTILITY	

0 50 100
SCALE IN FEET

CALL BEFORE YOU DIG!
Gopher State One Call
TWIN CITY AREA: 651-454-0002
TOLL FREE: 1-800-252-1166

WARNING:

THE CONTRACTOR SHALL BE RESPONSIBLE FOR CALLING FOR LOCATIONS OF ALL EXISTING UTILITIES. THEY SHALL COOPERATE WITH ALL UTILITY COMPANIES IN MAINTAINING THEIR SERVICE AND / OR RELOCATION OF LINES.

THE CONTRACTOR SHALL CONTACT GOPHER STATE ONE CALL AT 651-454-0002 AT LEAST 48 HOURS IN ADVANCE FOR THE LOCATIONS OF ALL UNDERGROUND WIRES, CABLES, CONDUITS, PIPES, MANHOLES, VALVES OR OTHER BURIED STRUCTURES BEFORE DIGGING. THE CONTRACTOR SHALL REPAIR OR REPLACE THE ABOVE WHEN DAMAGED DURING CONSTRUCTION AT NO COST TO THE OWNER.

CROW RIVER HEIGHTS WEST FUTURE ADD.

HANOVER, MN

BACKES COMPANIES
11413 ASHBURY CIRCLE N.
CHAMPLIN, MN 55316
PHONE: (612) 369-7750
FAX (612) 566-1525

LOUCKS
PLANNING
CIVIL ENGINEERING
LAND SURVEYING
LANDSCAPE ARCHITECTURE
ENVIRONMENTAL
7200 Hemlock Lane, Suite 300
Maple Grove, MN 55369
763.424.5505
www.loucksinc.com

CADD QUALIFICATION

CADD files prepared by the Consultant for this project are instruments of the Consultant professional services for use solely with respect to this project. These CADD files shall not be used on other projects, for additions to this project, or for completion of this project by others without written approval by the Consultant. With the Consultant's approval, others may be permitted to obtain copies of the CADD drawing files for information and reference only. All intentional or unintentional revisions, additions, or deletions to these CADD files shall be made at the full risk of that party making such revisions, additions or deletions and that party shall hold harmless and indemnify the Consultant from any & all responsibilities, claims, and liabilities.

SUBMITTAL/REVISIONS

04/20/18	CITY SUBMITTAL
05/24/18	CITY COMMENTS

PROFESSIONAL SIGNATURE

I hereby certify that this plan, specification, or report was prepared by me or under my direct supervision and that I am a duly Licensed Professional Engineer under the laws of the State of Minnesota.

PRELIMINARY

Licensed Professional Engineer: Trevor W. Smouth - PE
Date: License No. 20383

QUALITY CONTROL

Loucks Project No.	16101A
Project Lead	TWM
Drawn By	ZHW
Checked By	TWM
Review Date	05/24/18

SHEET INDEX

C0-1	COVER SHEET
C1-1	EXISTING CONDITIONS
C1-2	PRELIMINARY PLAT
C2-0 - C2-2	SITE PLAN
C3-0 - C3-2	GRADING PLAN
C3-3 - C3-5	SWPPP PLAN & NOTES
C4-0 - C4-2	UTILITY PLAN
C8-1 - C8-2	DETAILS
L0-1 - L0-3	TREE PRESERVATION
L0-4	TREE INVENTORY
L1-1 - L1-2	LANDSCAPE PLANS
L2-1	LANDSCAPE DETAILS

SOUTH UTILITY PLAN

C4-2

Plotted: 05/25/2018 11:57 AM W:\2016\16101A\CADD DATA\CIVIL\ dwg Sheet Files\C4-1 UTILITY PLAN

CROW RIVER HEIGHTS WEST FUTURE ADD.

HANOVER, MN

BACKES COMPANIES
11413 ASHBURY CIRCLE N.
CHAMPLIN, MN 55316
PHONE: (612) 369-7750
FAX (612) 566-1525

LOUCKS
PLANNING
CIVIL ENGINEERING
LAND SURVEYING
LANDSCAPE ARCHITECTURE
ENVIRONMENTAL
7200 Hemlock Lane, Suite 300
Maple Grove, MN 55369
763.424.5505
www.loucksinc.com

Standard Manhole for Sanitary Sewer (SAN - 01)

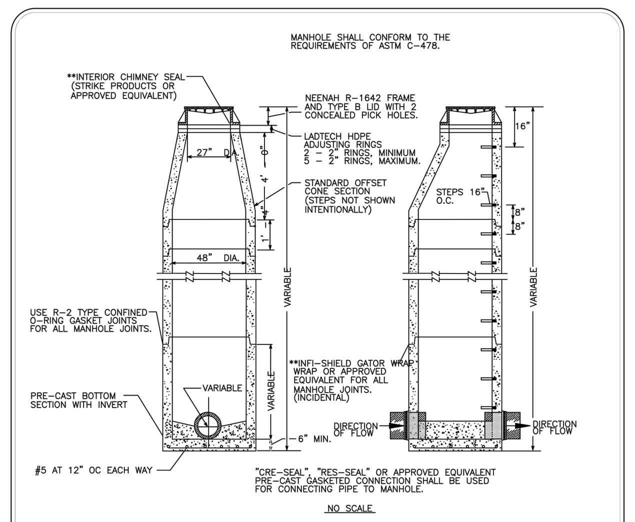

NOTES:
1. ALL CONNECTIONS TO EXISTING STRUCTURES SHALL BE CORE DRILLED
2. MANHOLE STEPS SHALL BE CAST IN ALUMINUM OR MA INDUSTRY WITH VINYL COATING OR APPROVED EQUIVALENT AND SHALL BE LOCATED ON THE DOWN STREAM SIDE OF MANHOLE
3. STEPS SHALL BE PLACED SO THAT THE OFFSET VERTICAL PORTION OF THE CONE IS FACING DOWN STREAM
4. MANHOLE COVERS SHALL BE CAST WITH THE WORDS "SANITARY SEWER"
5. THE INITIAL & FINAL RAISING OF CASTINGS SHALL BE CONSIDERED INCLUDED IN THE UNIT PRICE BID FOR CASTING THE ASSEMBLY
6. MAXIMUM DEPTH FROM TOP OF CASTING TO FIRST STEP SHALL NOT BE MORE THAN 16"
7. STEPS SHALL ALIGN WITH THE OPENING TO PROVIDE ACCESS TO THE MANHOLES
8. ALL SANITARY MANHOLES SHALL BE SEALED WITH INTERNAL MOLDED POLYMER SHIELD, SUCH AS "I/I BARRIER" AS MANUFACTURED BY STRIKE PRODUCTS APPROVED EQUIVALENT

Standard Plate Library City of Hanover | Title: Standard Manhole for Sanitary Sewer | Date: 01-16 | Plate No. SAN - 01 | Revised:

Sanitary Sewer Main/Service Connection Detail (SAN - 05)

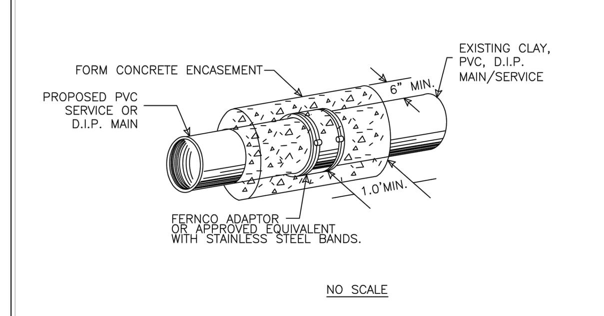

NOTES:
WRAP ADAPTER WITH POLYETHYLENE PRIOR TO ENCASEMENT WITH CONCRETE

Standard Plate Library City of Hanover | Title: Sanitary Sewer Main/Service Connection Detail | Date: 01-16 | Plate No. SAN - 05 | Revised:

PVC Pipe Bedding Detail (SAN - 06)

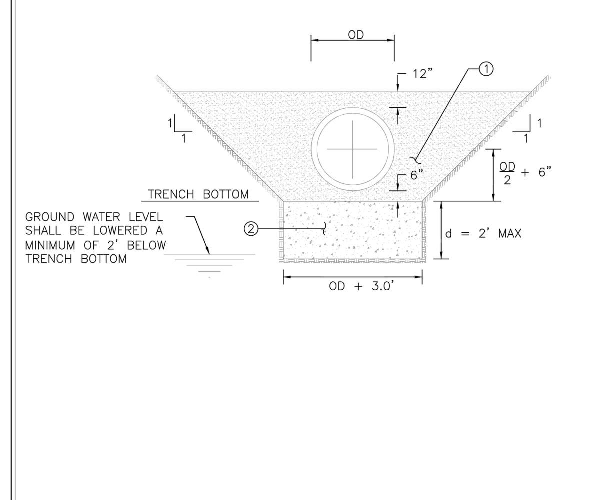

1. GRANULAR PIPE BEDDING MATERIAL (MNDOT SPEC 3149.2F) (INCIDENTAL)
2. 1½" CLEAR AGGREGATE BEDDING. TO BE USED ONLY IN AREAS AS DIRECTED BY ENGINEER. (NO PAYMENT WILL BE MADE WITHOUT PRIOR APPROVAL FROM THE ENGINEER)

Standard Plate Library City of Hanover | Title: PVC Pipe Bedding Detail | Date: 01-16 | Plate No. SAN - 06 | Revised:

Sewer Service Connections (SAN - 10)

NOTES:
1. Whenever service lines are installed in areas of high groundwater the last 5', as a minimum, are to be installed as a 45' riser to extend service line above groundwater level.
2. Metal fence post at end of water and sanitary service, 4' above grade. Water fence post to be painted blue. Sanitary fence post to be painted green.
3. Cleanouts are required every 100' on sanitary sewer services.

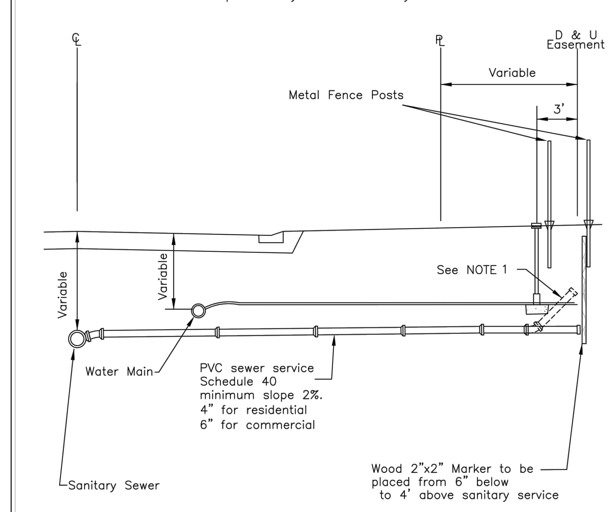

Standard Plate Library City of Hanover | Title: Sewer Service Connections | Date: 01-16 | Plate No. SAN - 10 | Revised:

Service Riser (SAN - 11)

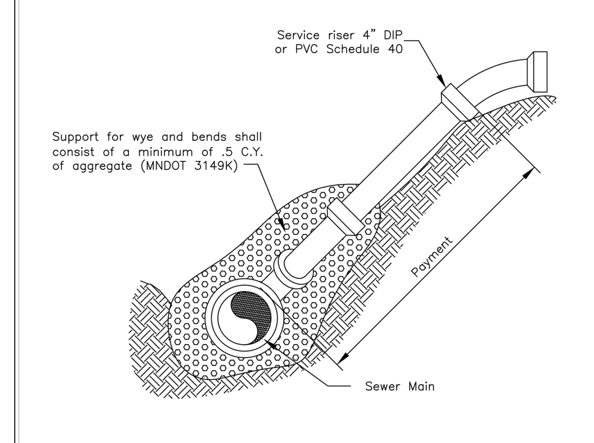

NOTE:
Where the sanitary main is deeper than 14.5', service risers shall be required.

Standard Plate Library City of Hanover | Title: Service Riser | Date: 01-16 | Plate No. SAN - 11 | Revised:

Hydrant Detail (WAT - 01)

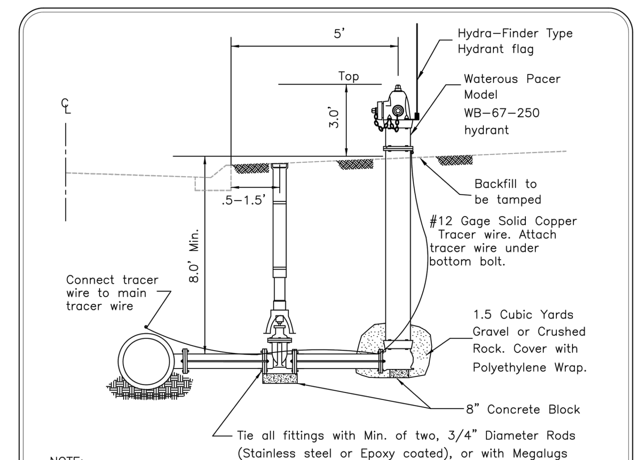

NOTE:
1. Factory installed plugs required whenever hydrants are installed in areas with high groundwater level, as determined by dewatering requirements and the City Engineer. The main nozzle shall be painted blue for all hydrants with plugged drain holes.
2. All ductile iron watermain fittings shall be fusion bonded epoxy coated.
3. Hydrants shall be marked with stainless steel tag from factory.
4. Contractor shall supply two hydrant flags, one to be installed on the hydrant and the second delivered to the Hanover Maintenance Facility.
5. All hydrant leads are to be constructed with Polywrapped DIP, Class 52.
6. All watermain bolts shall be ASTM F593 Type 316 Stainless Steel or approved equal.

Standard Plate Library City of Hanover | Title: Hydrant Detail | Date: 01-16 | Plate No. WAT - 01 | Revised:

Gate Valve and Box Installation (WAT - 02)

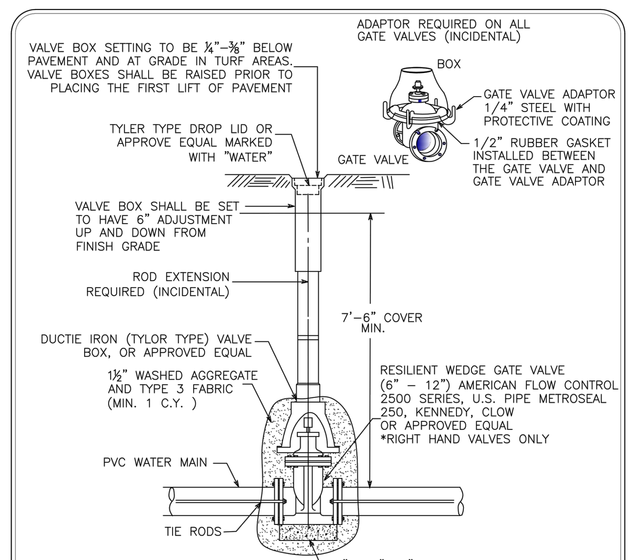

NOTES:
1. GATE VALVES SHOULD BE USED ON 6" THROUGH 12" WATERMAIN.
2. VALVE BOX INSERTS ARE NOT ALLOWED UNLESS APPROVED BY THE ENGINEER.
3. VALVE BOXES SHALL BE INSTALLED PLUMB AND SHALL ALLOW A 4" P.V.C. PIPE TO PASS ENTIRELY OVER THE GATE VALVE NUT AFTER INSTALLATION IS COMPLETE.
4. ALL VALVES SHALL BE TIED WITH 3/4" THREADED TIE RODS TO THE MAIN. MEGA LUGS MAY BE USED IN LIEU OF TIE RODS.
5. THE HEIGHT OF THE CAST IRON OR DUCTILE IRON ADJUSTMENT RING IS DETERMINED BY THE THICKNESS OF THE WEAR COURSE.
6. CAST IRON OR DUCTILE IRON ADJUSTMENT RINGS TO BE INSTALLED AS PER MANUFACTURE'S RECOMMENDATION.
7. THE INITIAL & FINAL RAISING OF VALVE BOXES SHALL BE CONSIDERED INCIDENTAL TO THE PROJECT.

Standard Plate Library City of Hanover | Title: Gate Valve and Box Installation | Date: 01-16 | Plate No. WAT - 02 | Revised:

Water Service Connections (WAT - 04)

NOTES:
1. All new curb boxes must have riser rods adjustable up and down for 7½' of cover. When an existing curb box is on a construction or reconstruction project, riser rods shall be installed to all curb boxes on that project.
2. Placement of curb stop and box on private streets shall be 10' back of curb with no copper stubbed past the curb stop and box.
3. Copper is to be one piece, no joints, couplings, etc., allowed from main to curb stop.
4. Water service and sanitary sewer service shall have a 3' horizontal separation.
5. Curb boxes located in driveways or parking lots shall be covered with a ford A-1 meter box cover.
6. Metal fence post at end of water and sanitary service, 4' above grade Water fence post to be painted blue. Sanitary fence post to be painted green.
7. Copper size (C.T.S.) polyethylene service tubing sized per plan.
8. HDPE is to be one piece, no joints, couplings, etc. allowed from main to stop. Backfill material shall be granualar bedding material, free of stones.
9. Tracer wire, #10 AWG solid copper wire with U.S.E. rated insulation.

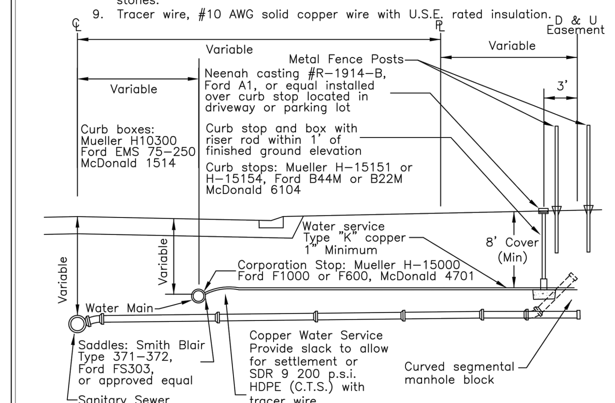

Standard Plate Library City of Hanover | Title: Water Service Connections | Date: 01-16 | Plate No. WAT - 04 | Revised:

Poured Concrete Thrust Blocking for Watermain (WAT - 05)

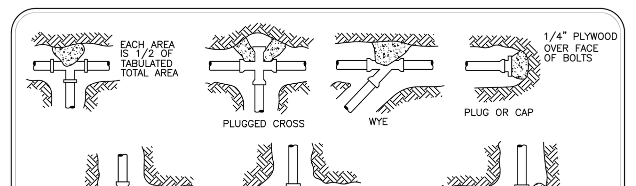

NOMINAL FITTING SIZE, INCHES	TEE, WYE, PLUG OR CAP	90° BEND, PLUGGED CROSS	TEE PLUGGED ON RUN A1	TEE PLUGGED ON RUN A2	45° BEND	22-1/2° BEND	11-1/4° BEND
4	1.0	1.4	1.9	1.4	1.0	–	–
6	2.1	3.0	4.3	3.0	1.6	1.0	–
8	3.8	5.3	7.6	5.4	2.9	1.5	1.0
10	5.9	8.4	11.8	8.4	4.6	2.6	1.2
12	8.5	12.0	17.0	12.0	6.6	3.4	1.7
14	11.5	16.3	23.0	16.3	8.9	4.6	2.3
16	15.0	21.3	30.0	21.3	11.6	6.0	3.0
18	19.0	27.0	38.0	27.0	14.6	7.6	3.8
20	23.5	33.3	47.0	33.3	18.1	9.4	4.7
24	34.0	48.0	68.0	48.0	26.2	13.6	6.8

NOTES:
1. CONCRETE THRUST BLOCKING TO BE POURED AGAINST UNDISTURBED EARTH.
2. KEEP CONCRETE CLEAR OF JOINT AND ACCESSORIES.
3. REQUIRED BEARING AREAS AT FITTING SHALL BE AS NOTED ABOVE, UNLESS INDICATED OTHERWISE.
4. BEARING AREAS AND SPECIAL BLOCKING DETAILS SHOWN ON THE PLANS TAKE PRECEDENCE OVER BEARING AREAS AND BLOCKING DETAILS SHOWN ON THIS STANDARD PLATE.
5. ABOVE BEARING AREAS BASED ON TEST PRESSURES OF 150 PSI AND AN ALLOWABLE SOIL BEARING STRESS OF 2000 LBS. PER SQUARE FOOT. TO COMPUTE BEARING AREAS FOR DIFFERENT TEST PRESSURES AND SOIL BEARING STRESSES, USE THE FOLLOWING EQUATION: BEARING AREA = (TEST PRESSURE/150) X (2000/SOIL BEARING STRESS) X (TABLE VALUE).

Standard Plate Library City of Hanover | Title: Poured Concrete Thrust Blocking for Watermain | Date: 01-16 | Plate No. WAT - 05 | Revised:

Standard Catch Basin (STO - 01)

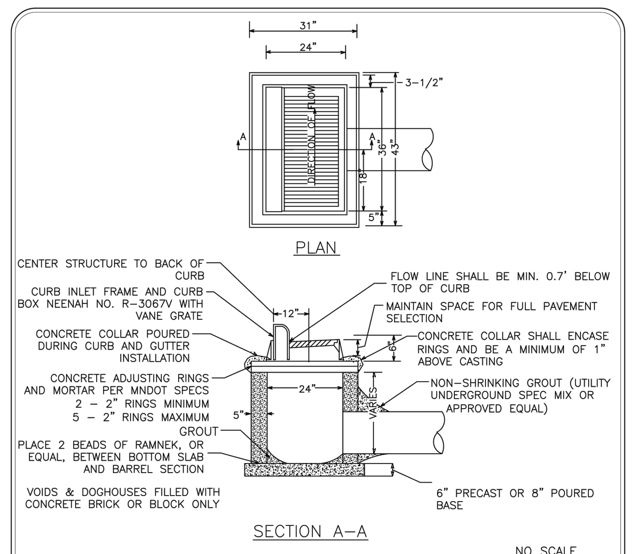

NOTES:
1. REINFORCING TO CONSIST OF #4 BARS @ 8" O.C., 4' MINIMUM LENGTH, EACH SIDE OF CASTING
2. GROUT BOTTOM TO DRAIN TO CENTER
3. PIPE CUT-OUTS TO BE LOCATED WHERE REQUIRED
4. INLET PROTECTION TO BE INSTALLED IN CATCH BASIN AND MAINTAINED AS DIRECTED BY THE ENGINEER
5. MORTAR SHALL MEET ASTM C270 AND ASTM C387 AND MNDOT SPECIFICATION 2506.2B

Standard Plate Library City of Hanover | Title: Standard Catch Basin | Date: 03-18 | Plate No. STO - 01 | Revised:

Standard Manhole for Storm Drain (STO - 02)

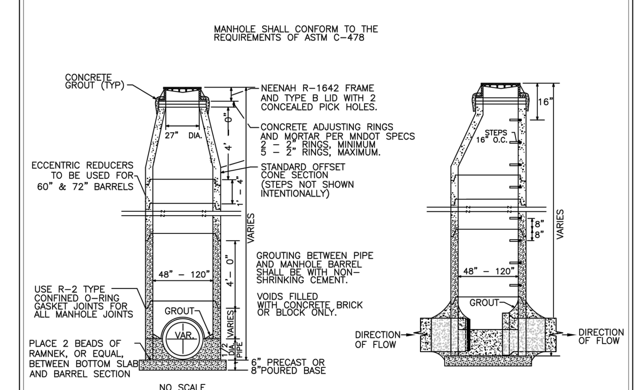

NOTES:
1. MANHOLE STEPS SHALL BE CAST ALUMINUM OR MA INDUSTRY WITH VINYL COATING OR APPROVED EQUIVALENT AND SHALL BE LOCATED ON THE DOWN STREAM SIDE OF THE MANHOLE
2. STEPS SHALL BE PLACED SO THAT THE OFFSET VERTICAL PORTION OF THE CONE IS FACING DOWN STREAM
3. MANHOLE COVER SHALL BE CAST WITH THE WORDS "STORM SEWER"
4. THE INITIAL AND FINAL RAISING OF CASTINGS SHALL BE CONSIDERED INCIDENTAL TO THE PROJECT
5. MAXIMUM DEPTH FROM TOP OF CASTING TO FIRST STEP SHALL NOT BE MORE THAN 16"
6. STEPS SHALL ALIGN WITH THE OPENING TO PROVIDE ACCESS TO THE MANHOLE
7. MORTAR SHALL MEET ASTM C270 AND ASTM C387 AND MNDOT SPECIFICATION 2506.2B

Standard Plate Library City of Hanover | Title: Standard Manhole for Storm Drain | Date: 03-18 | Plate No. STO - 02 | Revised:

Riprap Detail (STO - 04)

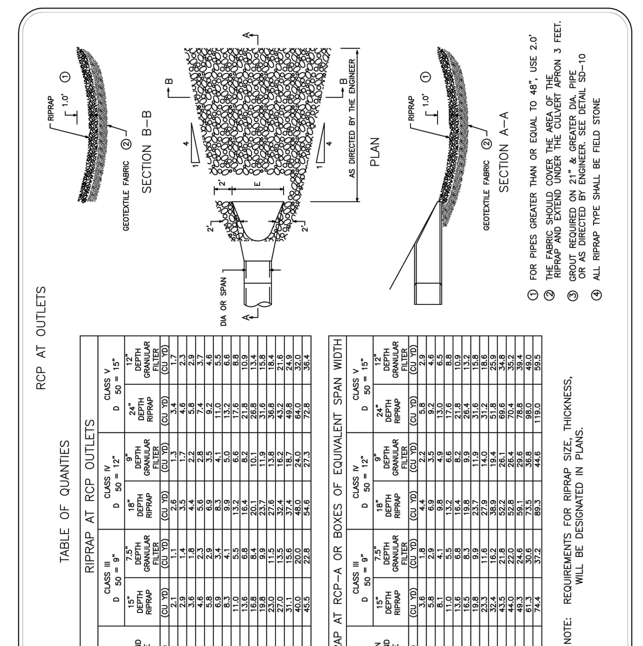

Standard Plate Library City of Hanover | Title: Riprap Detail | Date: 01-16 | Plate No. STO - 04 | Revised:

Grouted Riprap at Outlets (STO - 05)

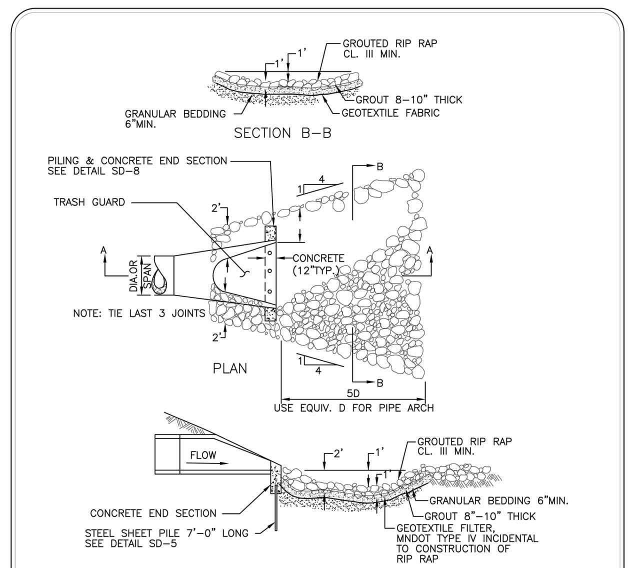

NOTE:
1. CONCRETE GROUT MATERIAL WILL BE USED ON ALL PIPE OUTLETS 21" DIA. OR LARGER.
2. PLACE RIPRAP INTO THE CONCRETE GROUT AFTER THE GROUT HAS BEEN PLACED AT A 8"-10" UNIFORM DEPTH.
3. DIMENSIONS AND C.Y. OF CONCRETE WILL BE DETERMINED BY ENGINEER.

Standard Plate Library City of Hanover | Title: Grouted Riprap at Outlets | Date: 01-16 | Plate No. STO - 05 | Revised:

RCP Pipe Bedding Detail (STO - 07)

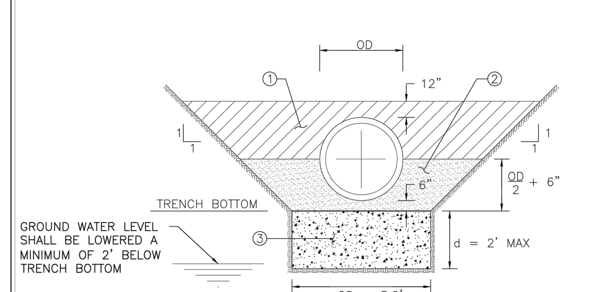

NOTES:
1. SELECTED MATERIAL (MNDOT SPEC 2451.3D) (INCIDENTAL)
2. GRANULAR PIPE BEDDING MATERIAL (MNDOT SPEC 3149.2F) (INCIDENTAL)
3. 1½" CLEAR AGGREGATE BEDDING. TO BE USED ONLY IN AREAS AS DIRECTED BY ENGINEER. (NO PAYMENT WILL BE MADE WITHOUT PRIOR APPROVAL FROM THE ENGINEER)

Standard Plate Library City of Hanover | Title: RCP Pipe Bedding Detail | Date: 01-16 | Plate No. STO - 07 | Revised:

Catch Basin Manhole Type II (STO - 10)

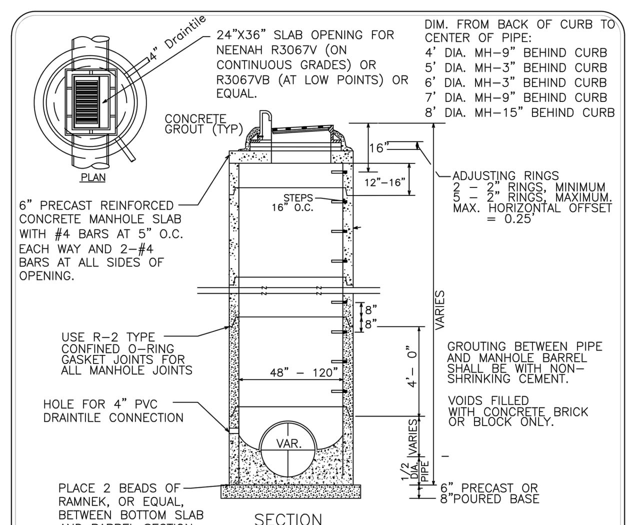

NOTES:
1. MANHOLE STEPS SHALL BE CAST ALUMINUM OR MA INDUSTRY WITH VINYL COATING OR APPROVED EQUIVALENT AND SHALL BE LOCATED ON THE DOWN STREAM SIDE OF THE MANHOLE
2. STEPS SHALL BE PLACED SO THAT THE OFFSET VERTICAL PORTION OF THE CONE IS FACING DOWN STREAM
3. MANHOLE COVER SHALL BE CAST WITH THE WORDS "STORM SEWER"
4. THE INITIAL AND FINAL RAISING OF CASTINGS SHALL BE CONSIDERED INCIDENTAL TO THE PROJECT
5. MAXIMUM DEPTH FROM TOP OF CASTING TO FIRST STEP SHALL NOT BE MORE THAN 16"
6. STEPS SHALL ALIGN WITH THE OPENING TO PROVIDE ACCESS TO THE MANHOLE
7. TOP BARREL SECTION BELOW TOP SLAB TO HAVE FLAT TOP EDGE SEALED WITH 2 BEADS OF RAMNEK OR EQUAL.

Standard Plate Library City of Hanover | Title: Catch Basin Manhole Type II | Date: 01-16 | Plate No. STO - 10 | Revised:

Flared End Section And Trash Guard (STO - 14)

SEE CITY PLATE NO. STO-09 FOR RIPRAP PLACEMENT.

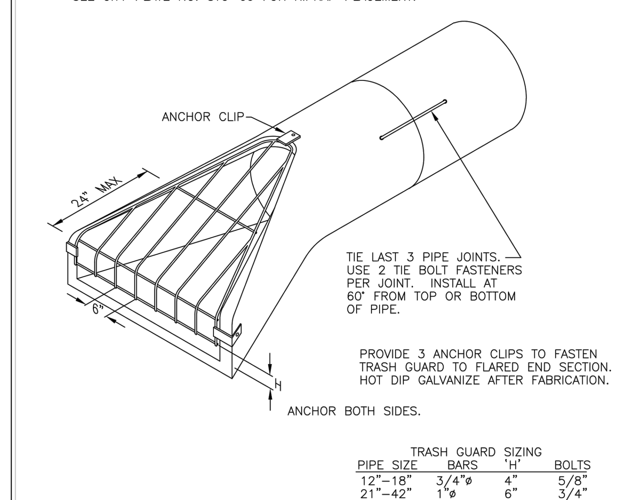

TRASH GUARD SIZING

PIPE SIZE	BARS	'H'	BOLTS
12"-18"	3/4"ø	4"	5/8"
21"-42"	1"ø	6"	3/4"
48"-72"	1 1/4"ø	12"	1"

Standard Plate Library City of Hanover | Title: Flared End Section And Trash Guard | Date: 01-16 | Plate No. STO - 14 | Revised:

Planting Detail Coniferous Tree On Slope (STR - 21)

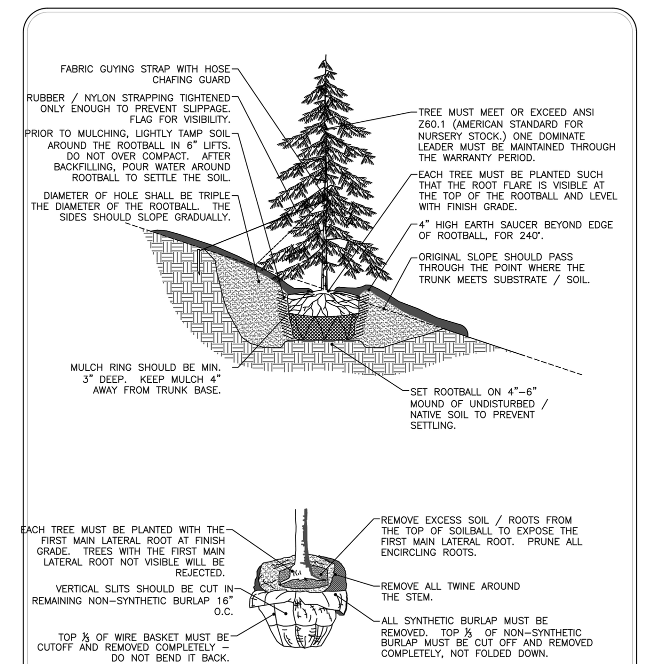

Standard Plate Library City of Hanover | Title: Planting Detail Coniferous Tree On Slope | Date: 01-16 | Plate No. STR - 21 | Revised:

Planting Detail Shrub (STR - 22)

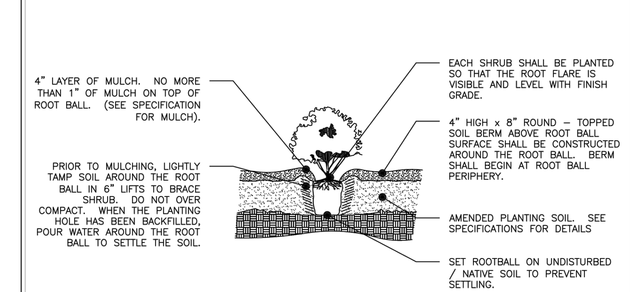

Standard Plate Library City of Hanover | Title: Planting Detail Shrub | Date: 01-16 | Plate No. STR - 22 | Revised:

Typical Trail Section (8' - 10' Wide) (STR - 13)

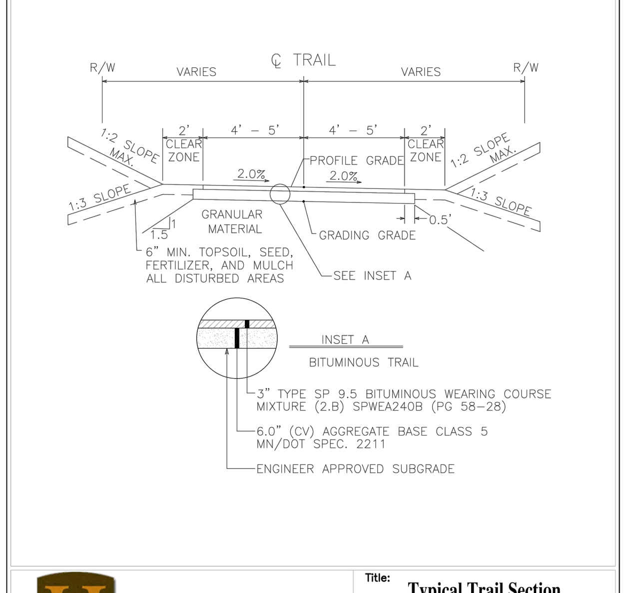

Standard Plate Library City of Hanover | Title: Typical Trail Section (8' - 10' Wide) | Date: 01-16 | Plate No. STR - 13 | Revised:

Temporary Bituminous Cul-de-Sac

FUTURE SEWER AND WATER LINES ARE TO BE EXTENDED BEYOND THE END OF THE STREET.
A HYDRANT & GATE VALVE SHALL BE PLACED AT THE END OF THE WATERMAIN.

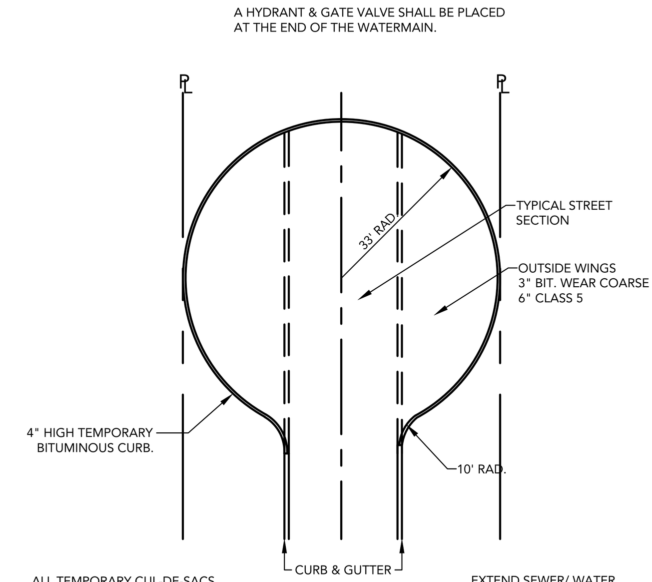

ALL TEMPORARY CUL-DE-SACS SHALL CONFORM TO TYPICAL STREET SECTION DETAILS.

EXTEND SEWER/ WATER SERVICES 15' BEYOND THE TEMP. BIT. CUL-DE-SAC. IF REQUIRED, INSTALL BARRICADES 10' BEYOND BITUMINOUS EDGE.

LOUCKS | TEMPORARY BITUMINOUS CUL-DE-SAC | LOUCKS PLATE NO. CUSTOM | DRAWN 7/2017

OCS 1

OUTLET CONTROL STRUCTURE ELEVATION TABLE

OCS NO.	A	B	C	D	E	F	G
OCS 1	968.0	972.1	970.00	978.4	978.4	48"	974.95

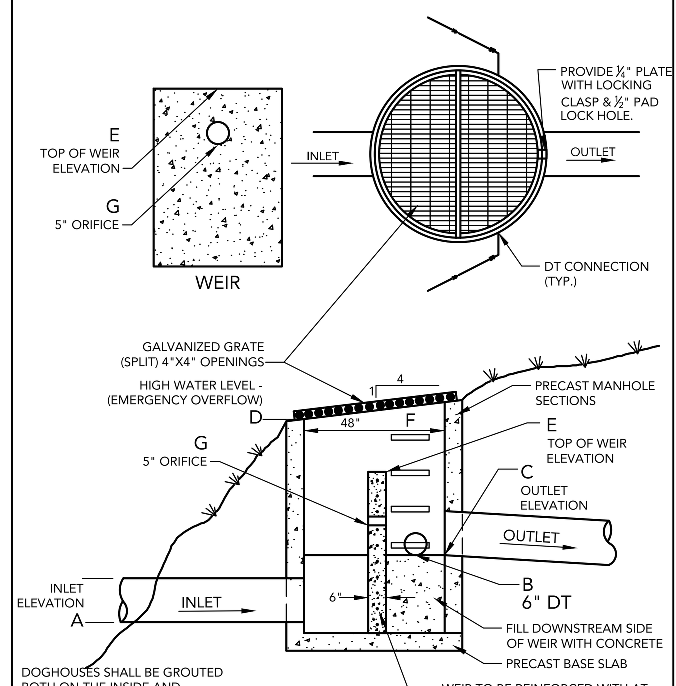

LOUCKS | OCS 1 | LOUCKS PLATE NO. - | DRAWN 4/2017

Existing OCS - Pond 4 Modification

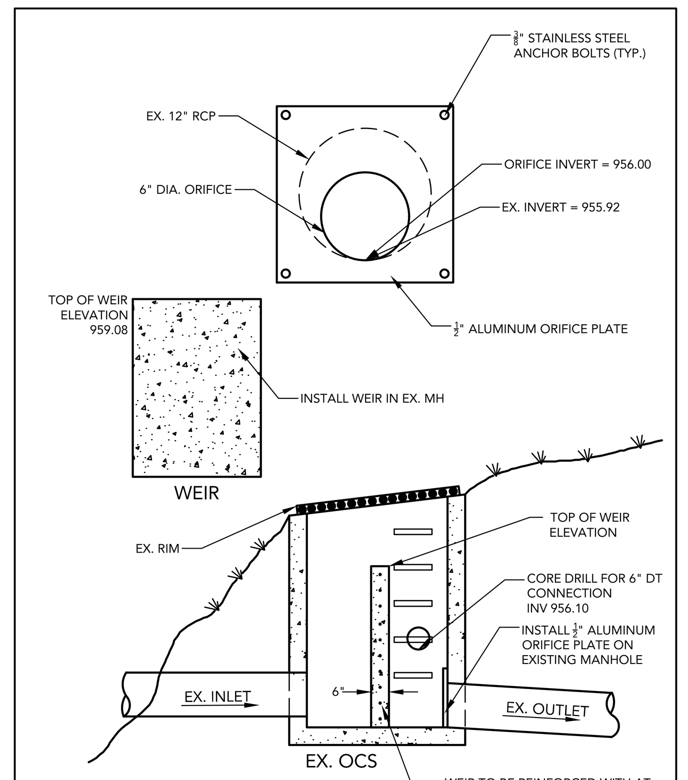

LOUCKS | EXISTING OCS - POND 4 MODIFICATION | LOUCKS PLATE NO. - | DRAWN 4/2018

OCS 6

OUTLET CONTROL STRUCTURE ELEVATION TABLE

OCS NO.	A	B	C	D	F
OCS 1	N/A	978.10	976.00	981.60	48"

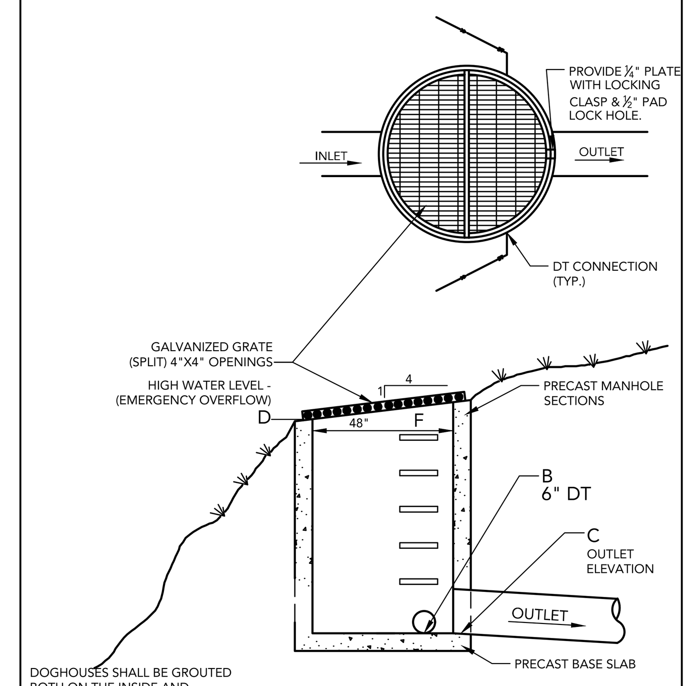

LOUCKS | OCS 6 | LOUCKS PLATE NO. - | DRAWN 4/2017

CBMH 133

CATCH BASIN MANHOLE STRUCTURE ELEVATION TABLE

MH NO.	A	B	C	D	E
OCS 133	973.00	973.00	973.00	980.00	48"

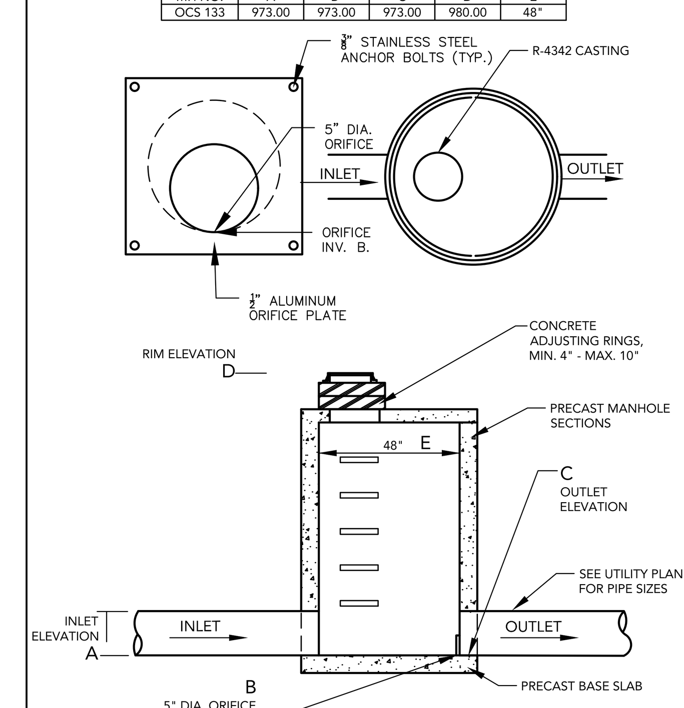

LOUCKS | CBMH 133 | LOUCKS PLATE NO. - | DRAWN 02/2017

CADD QUALIFICATION

CADD files prepared by the Consultant for this project are instruments of the Consultant professional services for use solely with respect to this project. These CADD files shall not be used on other projects, for additions to this project, or for completion of this project by others without written approval by the Consultant. With the Consultant's approval, others may be permitted to obtain copies of the CADD drawing files for information and reference only. All intentional or unintentional revisions, additions, or deletions to these CADD files shall be made at the full risk of that party making such revisions, additions or deletions and that party shall hold harmless and indemnify the Consultant from any & all responsibilities, claims, and liabilities.

SUBMITTAL/REVISIONS

04/20/18 CITY SUBMITTAL
05/24/18 CITY COMMENTS

PROFESSIONAL SIGNATURE

I hereby certify that this plan, specification or report was prepared by me or under my direct supervision and that I am a duly Licensed Professional Engineer under the laws of the State of Minnesota.

PRELIMINARY

License No. ... W. McLouth - PE 20383
Date

QUALITY CONTROL

Loucks Project No.	16101A
Project Lead	TWM
Drawn By	ZHW
Checked By	TWM
Review Date	05/24/18

SHEET INDEX

C0-1 COVER SHEET
C1-1 EXISTING CONDITIONS
C1-2 PRELIMINARY PLAT
C2-0 - C2-2 SITE PLAN
C3-0 - C3-2 GRADING PLAN
C3-3 - C3-5 SWPPP PLAN & NOTES
C4-0 - C4-2 UTILITY PLAN
C8-1 - C8-2 DETAILS
L0-1 - L0-3 TREE PRESERVATION
L0-4 TREE INVENTORY
L1-1 - L1-2 LANDSCAPE PLANS
L2-1 LANDSCAPE DETAILS

DETAILS
C8-1

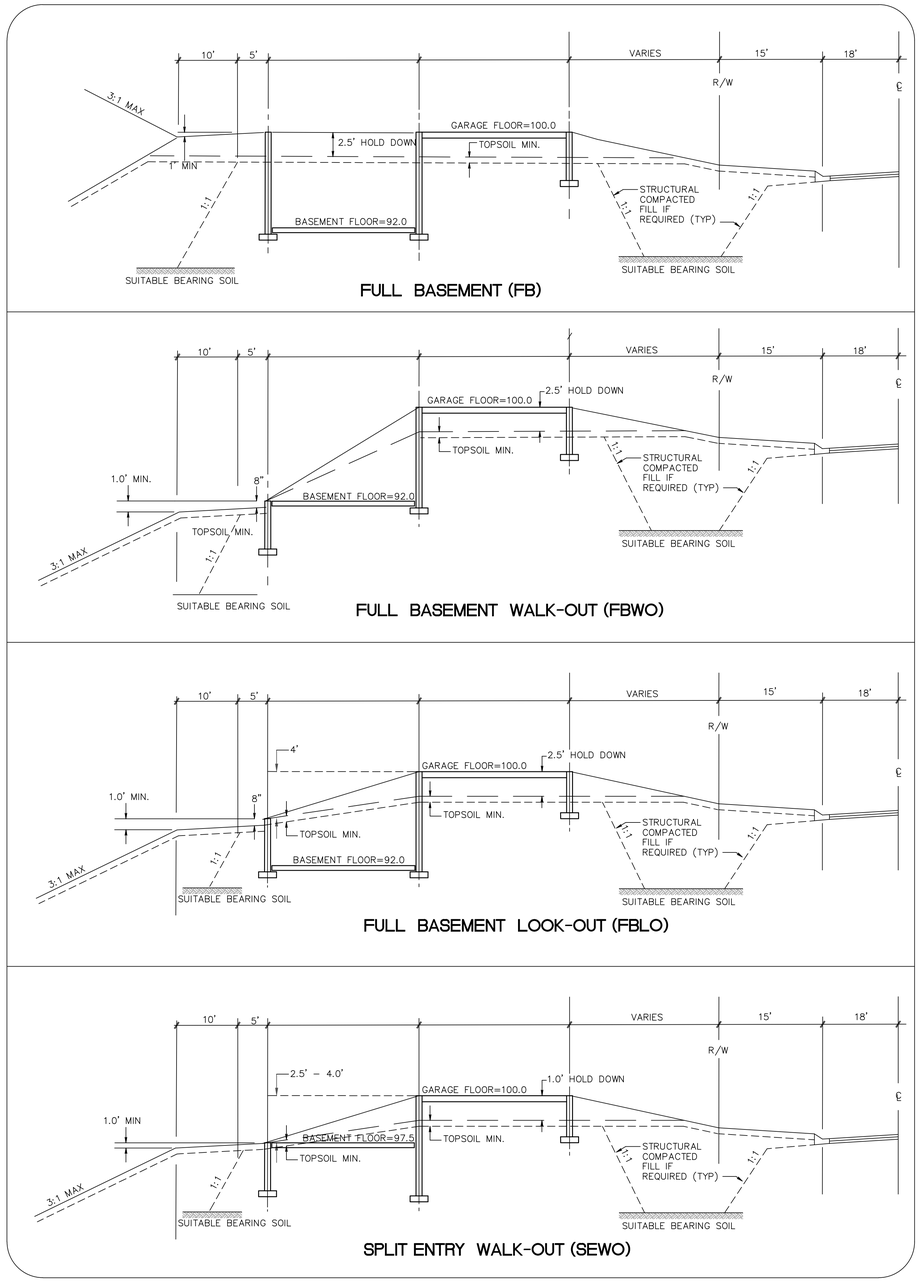

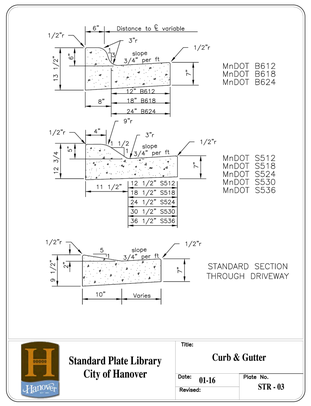

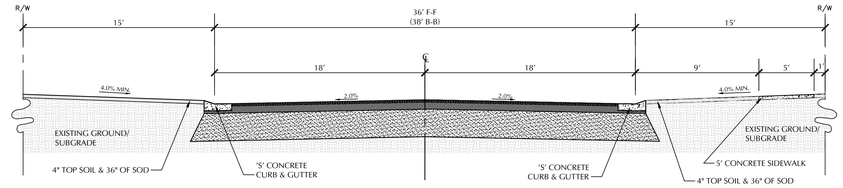

TYPICAL STREET SECTION
NOT TO SCALE

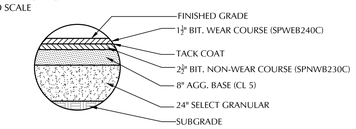

TYPICAL RESIDENTIAL STREET BITUMINOUS SECTION

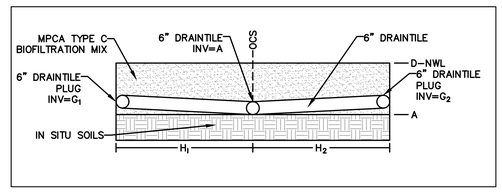

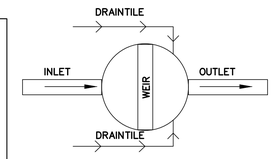

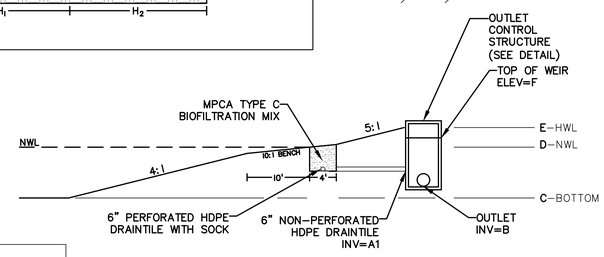

POND & FILTRATION BENCH DETAIL

POND & FILTRATION BENCH ELEVATION TABLE

POND NO.	A	A1	B	C	D	E	F	G_1	G_2	H_1	H_2
POND 1	972.60	971.10	970.00	965.00	974.60	978.20	978.40	973.10	973.10	635	502
POND 4	956.60	956.10	955.92	953.00	958.60	962.10	959.08	957.10	957.10	244	245
POND 6	978.60	978.10	976.00	974.00	980.60	981.50	N/A	979.10	979.10	204	144

CROW RIVER HEIGHTS WEST FUTURE ADD.

HANOVER, MN

BACKES COMPANIES
11413 ASHBURY CIRCLE N.
CHAMPLIN, MN 55316
PHONE: (612) 369-7750
FAX (612) 566-1525

LOUCKS
PLANNING
CIVIL ENGINEERING
LAND SURVEYING
LANDSCAPE ARCHITECTURE
ENVIRONMENTAL
7200 Hemlock Lane, Suite 300
Maple Grove, MN 55369
763.424.5505
www.loucksinc.com

CADD QUALIFICATION

CADD files prepared by the Consultant for this project are instruments of the Consultant professional services for use solely with respect to this project. These CADD files shall not be used on other projects, for additions to this project, or for completion of this project by others without written approval by the Consultant. The Consultant makes no representation as to the compatibility of these files with any other CADD software files, information and reference only. All intentional or unintentional revisions, additions, or deletions to these CADD files shall be made at the full risk of that party making such revisions, additions or deletions and that party shall hold harmless and indemnify the Consultant from any & all responsibilities, claims, and liabilities.

SUBMITTAL/REVISIONS

04/20/18	CITY SUBMITTAL
05/24/18	CITY COMMENTS

PROFESSIONAL SIGNATURE

I hereby certify that this plan, specification, or report was prepared by me or under my direct supervision and that I am a duly Licensed Professional Engineer under the laws of the State of Minnesota.

PRELIMINARY

Licensed Name: Zachary W. McLouth - PE
License No. 20383
Date

QUALITY CONTROL

Loucks Project No.	16101A
Project Lead	TWM
Drawn By	ZHW
Checked By	TWM
Review Date	05/24/18

SHEET INDEX

C0-1	COVER SHEET
C1-1	EXISTING CONDITIONS
C1-2	PRELIMINARY PLAT
C2-0 - C2-2	SITE PLAN
C3-0 - C3-2	GRADING PLAN
C3-3 - C3-5	SWPPP PLAN & NOTES
C4-0 - C4-2	UTILITY PLAN
C8-1 - C8-2	DETAILS
L0-1 - L0-3	TREE PRESERVATION
L0-4	TREE INVENTORY
L1-1 - L1-2	LANDSCAPE PLANS
L2-1	LANDSCAPE DETAILS

DETAILS

C8-2

Plotted: 05/25/2018 11:57 AM W:\2016\16101A\CADD DATA\CIVIL\ dwg Sheet Files\C8-1 DETAILS