AGENDA
HANOVER CITY COUNCIL
JUNE 19, 2018

MAYOR
CHRIS KAUFFMAN

COUNCIL
DOUGLAS HAMMERSENG
KEN WARPULA
JIM ZAJICEK
MARYANN HALLSTEIN

1. **Call to Order Regular City Council Work Session: 6:00 p.m.**

2. **Approval of Agenda**

3. **Consent Agenda Items:**
   a. **Approve Minutes of June 5, 2018 City Council Meeting** *(4)*
   b. **Approve Claims as Presented:** *(7)*
      - **Claims** **$ 126,436.36**
      - **Payroll** **$ 9,922.90**
      - **P/R taxes & Exp.** **$ 3,517.71**
      - **Other Claims** **$ 2,391.28**
      - **Total Claims** **$ 142,268.25**
   c. **Res No 06-19-18-65 – Designating Absentee Ballot Board** *(43)*

4. **Res No 06-19-18-66 – Finding that Crow River Heights West Future Additions Does Not Have Potential for Significant Environmental Impacts** *(44)*

5. **Res No 06-19-18-67 – Approving Rezoning of Property for a PUD** *(352)*

6. **Res No 06-19-18-68 – Approving Preliminary Plat for Crow River Heights West Future Additions** *(407)*

7. **Res No 06-19-18-69 – Approving Crow River Heights West Future Additions Grading Agreement** *(411)*

8. **Bridges at Hanover Outlots** *(422)*

9. **City Hall Renovation**

10. **Reports**

11. **Adjournment**

To: **Mayor Kauffman & Members of the Hanover City Council**

From: **Brian Hagen, City Administrator**

Date: **June 15, 2018**

Re: **Review of June 19, 2018 City Council Work Session Agenda**

---

1. **Call to Order Regular City Council Work Session: 6:00 p.m.**

2. **Approval of Agenda**

3. **Consent Agenda Items:** *See enclosed consent agenda.*
   a. **Approve Minutes of June 5, 2018 City Council Meeting** *(4)*
   b. **Approve Claims as Presented:** *(7)*
      - **Claims** **$ 126,436.36**
      - **Payroll** **$ 9,922.90**
      - **P/R taxes & Exp.** **$ 3,517.71**
      - **Other Claims** **$ 2,391.28**
      - **Total Claims** **$ 142,268.25**
   c. **Res No 06-19-18-65 – Designating Absentee Ballot Board** *(43)*

4. **Res No 06-19-18-66 – Finding that Crow River Heights West Future Additions Does Not Have Potential for Significant Environmental Impacts** *(44)*
   Enclosed is a memo, the Crow River Heights Environmental Assessment Worksheet, and a resolution approving a negative declaration for the Crow River Heights West Future Additions Environmental Assessment Worksheet. The City Planner, City Engineer, and developer will be present for questions.

5. **Res No 06-19-18-67 – Approving Rezoning of Property for a PUD** *(352)*
   Enclosed are several memos and documents for review to approve a rezoning for a Planned Unit Development for Crow River Heights West Future Additions. The City Planner, City Engineer, and developer will be present for questions.

6. **Res No 06-19-18-68 – Approving Preliminary Plat for Crow River Heights West Future Additions** *(407)*
   Enclosed is a resolution approving the Preliminary Plat for Crow River Heights West Future Additions. The City Planner, City Engineer, and developer will be present for questions.

7. **Res No 06-19-18-69 – Approving Crow River Heights West Future Additions Grading Agreement** *(411)*
   The developer is requesting approval of a grading agreement to allow grading for a portion of the future additions of Crow River Heights prior to final plat approval. The grading agreement does not give final approval and the developer understands the risks associated with grading the project prior to final plat approval. The City Planner, City Engineer, and developer will be present for questions.

8. **Bridges at Hanover Outlots** *(422)*
   Discussion associated with outlot maintenance responsibility for the Bridges at Hanover development will be held. Representatives of the Bridges at Hanover Homeowners Association will be present for the discussion. No decision is expected at this meeting.

9. **City Hall Renovation**
   Council requested a agenda item to commence brainstorming ideas for a remodel of the former Public Works garage area connected to City Hall.

10. **Reports**

11. **Adjournment**

CITY OF HANOVER
CITY COUNCIL MEETING
JUNE 5, 2018 – DRAFT MINUTES

Call to Order/Pledge of Allegiance:
Mayor Chris Kauffman called the regular meeting of Tuesday, June 5, 2018 to order at 7:02 p.m. Present were Mayor Chris Kauffman, Councilors Ken Warpula, Doug Hammerseng, Jim Zajicek and MaryAnn Hallstein. Also present were City Administrator Brian Hagen, Accountant / Deputy Clerk Jackie Heinz and Public Works Supervisor Jason Doboszenski. Other guests included Doug Voerding from Wright County Journal Press, State Representative Eric Lucero and a Wright County Sheriff.

Approval of Agenda:
Hagen requested to add Resolution #06-05-18-64 – Equipment Sharing Agreement to the Consent Agenda as item j.
MOTION by Hammerseng to approve the addition of Resolution #06-05-18-64, seconded by Warpula. **Motion carried unanimously.**

Consent Agenda:
MOTION by Warpula to approve the amended consent agenda, seconded by Hammerseng.

a. **Approve Minutes of May 15, 2018 City Council Work Session Meeting**
b. **Approve Claims as Presented:**
- **Claims $ 57,771.41**
- **Payroll $ 19,899.85**
- **P/R taxes & Exp $ 7,020.44**
- **Other Claims $ 4,782.01**
- **Total Claims $ 89,473.71**

c. **Res No 06-05-18-53 – Appointing 2018 Election Judges**
d. **Res No 06-05-18-54 – Approving RMEF Exempt Gambling Permit**
e. **Res No 06-05-18-55 – Approving Wright County Election Equipment Lease Agreement**
f. **Res No 06-05-18-56 – Approving 2019-2020 Hennepin County Law Enforcement Agreement**
g. **Res No 06-05-18-57 – Approving 2018 Liquor License Renewals**
h. **Res No 06-05-18-58 – Approving Temporary Intoxicating Liquor License**
i. **Res No 06-05-18-59 – Approving Hanover Sign Replacements**
j. **Res No 06-05-18-64 – Approving Equipment Sharing Agreement**

Motion carried unanimously.

Citizen's Forum:

State Representative Eric Lucero
Lucero gave a post legislative wrap up. The topics included tax conformity, corridors of commerce funding for District 30, gun safety / public safety, spending supplemental bill, fraudulent daycares, light rail and met council.

Public Hearings:
None

Unfinished Business:
None

New Business:

Res. No. 06-05-18-60 – Approving Hanover Harvest Festival Exempt Gambling Permit

MOTION by Warpula to approve Res. No. 06-05-18-60, seconded by Hallstein. **Motion carried unanimously.**

Res. No. 06-05-18-61 – Approving Crow River Senior Center Excluded Bingo Permit

MOTION by Warpula to approve Res. No. 06-05-18-61, seconded by Hammerseng. **Motion carried unanimously.**

Res. No. 06-05-18-62 – Approving Downtown Parking Lot Site Plan

Hagen stated the site plan has been presented to the Planning Commission, there were no changes or comments. This resolution would authorize staff to obtain quotes for the different phases of the project.

MOTION by Hallstein to approve Res. No. 06-05-18-62, seconded by Hammerseng. **Motion carried unanimously.**

Res. No. 06-05-18-63 – Approving Purchase of Plate Compactor

Doboszenski stated public works is requesting to purchase a plate compactor to be used with concrete and asphalt projects.

MOTION by Hallstein to approve Res. No. 06-05-18-63, seconded by Warpula. **Motion carried unanimously.**

July 3, 2018 City Council Meeting Date Change

Hagen stated July 3rd is a Tuesday, the 4th of July Holiday falls the day after. Hagen further stated we are anticipating no development talk at this time. Council consensus to keep meeting as scheduled.

Reports

Doboszenski

- Repaired a heat buckled sidewalk on Kayla
- Ball Field is complete
- Received 120 truckloads of millings from the pavement project, it's been spread over the area behind public works and still have a reserve pile

Hallstein

- Has asked for complaints regarding Xcel electric outages on the Hanover Community Facebook page, has received around 30

Zajicek

- A chain was installed across the access path in Cardinal Park due to people driving on the grass
- Inquired about Jake Brake signs on County Road 19
- Had Parks Walk Thru at the last Park Board meeting, all the parks look great
- Inquired about moving 2 light poles on the sledding hill at Eagleview Park to be repurposed in a different park

Warpula

- Inquired if dust control had been completed, Doboszenski stated it is scheduled for June 18th

Heinz

- Hanover Harvest Festival recently had a meeting, planning is going well. Two food vendors are not coming back this year, if anyone has ideas please let her know.

Hagen

- The Highway 55 Open House will be on Thursday from 4-7 pm at the Rockford Shelter. Hagen has contacted Wright County and Hennepin County regarding the detour.
- The August Council Meeting is scheduled for Tuesday August 7th, which is also Night to Unite. Council Consensus to the move the meeting to Monday August 6th
- River Road Phase 2 should be completed by end of week. Found 2 culverts under the road which needed to be done which delayed paving in Pheasant a couple days. Has asked Wright County to split up the patrol hours in the area.

Kauffman

- Received an e-mail asking for a city pool

Adjournment

MOTION by Warpula to adjourn at 8:07 p.m., seconded by Hammerseng. **Motion carried unanimously.**

APPROVED BY:

_____

Chris Kauffman, Mayor

ATTEST:

_____

Brian Hagen, City Administrator

CITY OF HANOVER

Payments

Current Period: June 2018

Batch Name 06/19/18 PAY
Payment Computer Dollar Amt $126,436.36 **Posted**

Refer 2395 *AEM FINANCIAL SOLUTIONS, LLC* Ck# 002369E 6/19/2018
Cash Payment E 100-41530-310 Other Professional Servi 2017 Audit Prep Review $2,815.75
Invoice 401508 5/31/2018
Transaction Date 6/11/2018 Due 0 Cash 10100 **Total** $2,815.75

Refer 2387 *AFLAC* Ck# 002368E 6/19/2018
Cash Payment G 100-21706 Medical/Dental Ins Supplemental Insurance - June 2018 - Acct #G1V17 $249.99
Invoice 014306 6/11/2018
Transaction Date 6/11/2018 Due 0 Cash 10100 **Total** $249.99

Refer 2400 *AMERICAN PRESSURE INC.* Ck# 033513 6/19/2018
Cash Payment E 100-43000-220 Repair/Maint Supply (GE K02-19E Union Screw $64.15
Invoice 101895 6/1/2018
Transaction Date 6/11/2018 Due 0 Cash 10100 **Total** $64.15

Refer 2401 *BOYER TRUCKS* Ck# 002370E 6/19/2018
Cash Payment E 100-43000-220 Repair/Maint Supply (GE Freightliner: Scraper Blade will not Lift when Truck is Put in Reverse $183.91
Invoice 478087 5/18/2018
Transaction Date 6/11/2018 Due 0 Cash 10100 **Total** $183.91

Refer 2399 *CARSON, CLELLAND & SCHREDE* Ck# 033514 6/19/2018
Cash Payment E 100-41610-304 Legal Fees Legal Support / Work - April 2018 $30.70
Invoice 6/1/2018
Cash Payment E 100-41610-304 Legal Fees Legal Support / Work - May 2018 $28.13
Invoice 6/1/2018
Transaction Date 6/11/2018 Due 0 Cash 10100 **Total** $58.83

Refer 2402 *CENTERPOINT ENERGY* Ck# 033515 6/19/2018
Cash Payment E 100-42280-383 Gas Utilities Fire Station Gas Utilities: 04/25/18 - 05/24/18 $26.66
Invoice
Cash Payment E 100-41940-383 Gas Utilities City Hall Gas Utilities: 04/25/18 - 05/24/18 $78.79
Invoice
Cash Payment E 100-41940-383 Gas Utilities PW Bldg. Gas Utilities: 04/25/18 - 05/24/18 $63.06
Invoice
Transaction Date 6/11/2018 Due 0 Cash 10100 **Total** $168.51

Refer 2384 *CENTURY LINK* Ck# 033516 6/19/2018
Cash Payment E 100-42280-321 Telephone Fire Station Landline - 05/28/18 - 06/27/18 $38.20
Invoice 5/28/2018
Transaction Date 6/13/2018 Due 0 Cash 10100 **Total** $38.20

Refer 2406 *CITY OF ST. MICHAEL* Ck# 002371E 6/19/2018
Cash Payment E 602-49455-310 Other Professional Servi SAC Fee - 11607 Erin Street $4,712.00
Invoice
Cash Payment E 602-49455-310 Other Professional Servi SAC Fee - 9813 Jasmine Avenue $4,712.00
Invoice
Cash Payment E 602-49455-310 Other Professional Servi SAC Fee - 411 LaBeaux Avenue $10,424.00
Invoice

CITY OF HANOVER

Payments

Current Period: June 2018

Transaction Date	6/11/2018	Due 0	Cash	10100	**Total**	$19,848.00
Refer	2379 *COLLABORATIVE PLANNING LLC*		Ck# 002377E 6/19/2018			
Cash Payment	E 100-41910-310 Other Professional Servi		General Planning: May 2018			$2,979.50
Invoice 2018-092	6/13/2018					
Cash Payment	G 824-20200 Accounts Payable		CRH West 3rd Addition EAW: May 2018			$934.25
Invoice 2018-093	6/13/2018					
Cash Payment	G 825-20200 Accounts Payable		CRH Future West Preliminary Plat: May 2018			$2,828.00
Invoice 2018-094	6/13/2018					
Cash Payment	G 826-20200 Accounts Payable		CRH West 4th Addition Final Plat: May 2018			$75.75
Invoice 2018-095	6/13/2018					
Cash Payment	G 818-20200 Accounts Payable		Hanover Dental: May 2018			$151.50
Invoice 2018-096	6/13/2018			Project 208244		
Cash Payment	G 818-20200 Accounts Payable		PAXMAR Concept Plan: May 2018			$75.75
Invoice 2018-097	6/13/2018			Project 208240		
Cash Payment	G 818-20200 Accounts Payable		PAXMAR EAW: May 2018			$227.25
Invoice 2018-098	6/13/2018			Project 208245		
Transaction Date	6/13/2018	Due 0	Cash	10100	**Total**	$7,272.00
Refer	2409 *COMCAST*		Ck# 033517 6/19/2018			
Cash Payment	E 100-41940-321 Telephone		CH: Digital Voice & Internet - June 2018			$221.19
Invoice	5/25/2018					
Transaction Date	6/11/2018	Due 0	Cash	10100	**Total**	$221.19
Refer	2396 *COTTENS, INC.*		Ck# 033518 6/19/2018			
Cash Payment	E 100-43000-215 Shop Supplies		Ford F250: Oil Filter, 10W30 Oil			$81.95
Invoice 233-123257	5/14/2018					
Cash Payment	E 100-43000-220 Repair/Maint Supply (GE		Chevy 1 Ton: Battery and Core Deposit			$159.99
Invoice 233-124195	5/21/2018					
Cash Payment	E 100-43000-220 Repair/Maint Supply (GE		Chevy 1 Ton: Credit for Core Deposit			-$18.00
Invoice 233-125526	5/30/2018					
Transaction Date	6/11/2018	Due 0	Cash	10100	**Total**	$223.94
Refer	2382 *FINKEN WATER SOLUTIONS*		Ck# 033519 6/19/2018			
Cash Payment	E 100-42280-220 Repair/Maint Supply (GE		Cook & Cold Rental Cooler 06/01/18 - 06/30/18			$9.50
Invoice 1095716	6/1/2018					
Cash Payment	E 100-42280-220 Repair/Maint Supply (GE		Cook & Cold Rental Cooler 06/01/18 - 06/30/18			$9.50
Invoice 1095717	6/1/2018					
Transaction Date	6/13/2018	Due 0	Cash	10100	**Total**	$19.00
Refer	2383 *FIRE SAFETY USA, INC.*		Ck# 033520 6/19/2018			
Cash Payment	E 100-42220-260 Uniforms		Dyna Fit Suspenders w/ Snap Attach & Quick Adjust, Suspender Padding			$85.00
Invoice 111907	5/30/2018					
Cash Payment	E 100-42220-260 Uniforms		6 - FX Bullard Helmet with 4" Faceshield, Yellow			$1,280.00
Invoice 111941	5/31/2018					
Transaction Date	6/13/2018	Due 0	Cash	10100	**Total**	$1,365.00
Refer	2412 *GUENTHER, BRENDA OR CLAIR*		Ck# 033521 6/19/2018			
Cash Payment	G 100-22000 Deposits		Hall Damage Deposit Release - 06/09/18 Event			$200.00
Invoice	6/12/2018					
Transaction Date	6/12/2018	Due 0	Cash	10100	**Total**	$200.00
Refer	2385 *HARDWARE HANK*		Ck# 033522 6/19/2018			

CITY OF HANOVER

Payments

Current Period: June 2018

Cash Payment	E 100-45200-220 Repair/Maint Supply (GE	Cardinal Park: Bolt, Chain		$54.32
Invoice 1478643	5/8/2018			
Cash Payment	E 402-45200-310 Other Professional Servi	Ballfield Dugouts: Galv. Nails		$13.47
Invoice 1482684	5/21/2018		Project 208231	
Cash Payment	E 100-43000-240 Small Tools and Minor E	Drill Bit, Impact Double End, Misc. Tools		$35.94
Invoice 1483193	5/23/2018			
Cash Payment	E 100-43000-220 Repair/Maint Supply (GE	Hose Coupling		$5.39
Invoice 1485453	5/30/2018			
Cash Payment	E 100-43000-215 Shop Supplies	All Purpose Fanta Cleaner		$4.49
Invoice 1479075	5/10/2018			
Cash Payment	E 100-41940-220 Repair/Maint Supply (GE	Baking Soda, Dish Detergent, Renuzit Air Freshener		$5.55
Invoice 1479078	5/10/2018			
Cash Payment	E 100-45200-220 Repair/Maint Supply (GE	Hose Clamps, Coupling Inserts		$12.42
Invoice 1485394	5/30/2018			
Cash Payment	E 100-43121-224 Street Maint Materials	Poly Film Clear		$22.49
Invoice 1485394	5/30/2018			
Transaction Date	6/14/2018	Due 0	Cash 10100	**Total** $154.07
Refer	2411 *HEALTH PARTNERS*	Ck# 002372E 6/19/2018		
Cash Payment	G 100-21706 Medical/Dental Ins	Medical & Dental Premiums - July 2018		$3,867.58
Invoice 81844350	6/7/2018			
Transaction Date	6/12/2018	Due 0	Cash 10100	**Total** $3,867.58
Refer	2378 *JIM LEUER CONSTRUCTION*	Ck# 033523 6/19/2018		
Cash Payment	G 811-20200 Accounts Payable	Erosion Control Escrow Release - 631 Kayla Lane		$2,000.00
Invoice	6/13/2017			
Cash Payment	G 815-20200 Accounts Payable	Landscaping Escrow Release - 631 Kayla Lane		$2,000.00
Invoice	6/13/2017			
Cash Payment	G 817-20200 Accounts Payable	Infrastructure Escrow Release - 631 Kayla Lane		$1,000.00
Invoice	6/13/2017			
Transaction Date	6/13/2018	Due 0	Cash 10100	**Total** $5,000.00
Refer	2405 *JOINT POWERS WATER BOARD*	Ck# 033524 6/19/2018		
Cash Payment	E 601-49410-310 Other Professional Servi	WAC Fee - 11607 Erin Street		$2,001.00
Invoice	5/31/2018			
Cash Payment	E 601-49410-310 Other Professional Servi	WAC Fee - 9813 Jasmine Avenue		$2,001.00
Invoice	5/31/2018			
Cash Payment	E 601-49410-310 Other Professional Servi	WAC Fee - 411 LaBeaux Avenue		$4,482.00
Invoice	5/31/2018			
Transaction Date	6/11/2018	Due 0	Cash 10100	**Total** $8,484.00
Refer	2407 *KOLASA, STAN*	Ck# 033525 6/19/2018		
Cash Payment	G 100-22000 Deposits	Shelter Damage Deposit Release - 06/03/18 Event		$100.00
Invoice				
Transaction Date	6/11/2018	Due 0	Cash 10100	**Total** $100.00
Refer	2410 *LEAGUE OF MN CITIES INS. TRUS*	Ck# 033526 6/19/2018		
Cash Payment	E 100-42210-150 Worker s Comp (GENER	Work Comp Firefighters: 05/31/18 - 12/31/18		$5,040.18
Invoice	6/4/2018			

CITY OF HANOVER

Payments

Current Period: June 2018

Cash Payment	G 100-15500 Prepaid Items	Work Comp Firefighters: 01/01/19 - 05/31/19	$3,360.12
Invoice	6/4/2018		
Cash Payment	E 100-41960-150 Worker s Comp (GENER	Work Comp Clerical / Office: 05/31/18 - 12/31/18	$553.22
Invoice	6/4/2018		
Cash Payment	G 100-15500 Prepaid Items	Work Comp Clerical / Office: 01/01/19 - 05/31/19	$368.82
Invoice	6/4/2018		
Cash Payment	E 100-41960-150 Worker s Comp (GENER	Work Comp Public Works: 05/31/18 - 12/31/18	$7,279.62
Invoice	6/4/2018		
Cash Payment	G 100-15500 Prepaid Items	Work Comp Public Works: 01/01/19 - 05/31/19	$4,853.07
Invoice	6/4/2018		
Cash Payment	E 100-41960-150 Worker s Comp (GENER	Work Comp Boards / Elected Officials: 05/31/18 - 12/31/18	$34.18
Invoice	6/4/2018		
Cash Payment	G 100-15500 Prepaid Items	Work Comp Boards / Elected Officials: 01/01/19 - 05/31/19	$22.79
Invoice	6/4/2018		
Cash Payment	E 100-41960-361 General Liability Ins	General Liability Inc. - General Government: 05/31/18 - 12/31/18	$5,450.57
Invoice	5/30/2018		
Cash Payment	G 100-15500 Prepaid Items	General Liability Ins. - General Government: 01/01/19 - 05/31/19	$3,893.27
Invoice	5/30/2018		
Cash Payment	E 100-41960-361 General Liability Ins	Excess Liability Ins. - General Government: 05/31/18 - 12/31/18	$1,280.18
Invoice	5/30/2018		
Cash Payment	G 100-15500 Prepaid Items	Excess Liability Ins. - General Government: 01/01/19 - 05/31/19	$914.41
Invoice	5/30/2018		
Cash Payment	E 100-42210-361 General Liability Ins	General Liability Ins. - Fire Dept: 05/31/18 - 12/31/18	$1,926.18
Invoice	5/30/2018		
Cash Payment	G 100-15500 Prepaid Items	General Liability Ins. - Fire Dept: 01/01/19 - 05/31/19	$1,375.84
Invoice	5/30/2018		
Cash Payment	E 100-42210-361 General Liability Ins	Excess Liability Ins. - Fire Dept: 05/31/18 - 12/31/18	$77.64
Invoice	5/30/2018		
Cash Payment	G 100-15500 Prepaid Items	Excess Liability Ins. - Fire Dept: 01/01/19 - 05/31/19	$55.45
Invoice	5/30/2018		
Cash Payment	E 100-41960-361 General Liability Ins	General Liability Ins. - Public Works: 05/31/18 - 12/31/18	$2,348.24
Invoice	5/30/2018		
Cash Payment	G 100-15500 Prepaid Items	General Liability Ins. - Public Works: 01/01/19 - 05/31/19	$1,677.32
Invoice	5/30/2018		
Cash Payment	E 602-41960-361 General Liability Ins	General Liability Ins. - Sewer: 05/31/18 - 12/31/18	$1,068.08
Invoice	5/30/2018		
Cash Payment	G 602-15500 Prepaid Items	General Liability Ins. - Sewer: 01/01/19 - 05/31/19	$762.92
Invoice	5/30/2018		

CITY OF HANOVER

Payments

Current Period: June 2018

Cash Payment	E 601-41960-361 General Liability Ins		General Liability Ins. - Water: 05/31/18 - 12/31/18			$152.44
Invoice	5/30/2018					
Cash Payment	G 601-15500 Prepaid Items		General Liability Ins. - Water: 01/01/19 - 05/31/19			$108.88
Invoice	5/30/2018					
Cash Payment	E 100-41960-361 General Liability Ins		General Liability Ins. - Parks: 05/31/18 - 12/31/18			$3,927.90
Invoice	5/30/2018					
Cash Payment	G 100-15500 Prepaid Items		General Liability Ins. - Parks: 01/01/19 - 05/31/19			$2,805.65
Invoice	5/30/2018					
Cash Payment	E 100-41960-361 General Liability Ins		General Liability Ins. - City Wide: 05/31/18 - 12/31/18			$470.00
Invoice	5/30/2018					
Cash Payment	G 100-15500 Prepaid Items		General Liability Ins. - City Wide: 01/01/19 - 05/31/19			$335.72
Invoice	5/30/2018					
Cash Payment	E 100-41960-361 General Liability Ins		General Liability Ins. - EDA: 05/31/18 - 12/31/18			$26.24
Invoice	5/30/2018					
Cash Payment	G 100-15500 Prepaid Items		General Liability Ins. - EDA: 01/01/19 - 05/31/19			$18.75
Invoice	5/30/2018					
Cash Payment	E 100-41960-361 General Liability Ins		Excess Liability Ins. - EDA: 05/31/18 - 12/31/18			$18.85
Invoice	5/30/2018					
Cash Payment	G 100-15500 Prepaid Items		Excess Liability Ins. - EDA: 01/01/19 - 05/31/19			$13.47
Invoice	5/30/2018					
Transaction Date	6/11/2018	Due 0	Cash	10100	**Total**	$50,220.00
Refer	2388 *MCKEE, NINA*		Ck# 033527 6/19/2018			
Cash Payment	G 100-22000 Deposits		Shelter Damage Deposit Release - 06/08/18 Event			$100.00
Invoice	6/11/2018					
Transaction Date	6/11/2018	Due 0	Cash	10100	**Total**	$100.00
Refer	2398 *MENARDS - BUFFALO*		Ck# 033528 6/19/2018			
Cash Payment	E 100-42260-220 Repair/Maint Supply (GE		Black & White Number Kit			$3.96
Invoice 71643	6/1/2018					
Cash Payment	E 100-45200-225 Landscaping Materials		3 - 20# Bags of Hardy Mix Seed			$119.94
Invoice 71643	6/1/2018					
Cash Payment	E 100-43000-240 Small Tools and Minor E		14" Masonry Diamond Blade			$129.00
Invoice 71643	6/1/2018					
Cash Payment	E 100-43000-240 Small Tools and Minor E		Circular Saw Blade			$39.97
Invoice 71335	5/29/2018					
Cash Payment	E 402-45200-310 Other Professional Servi		Green Tin for Dugouts			$261.14
Invoice 71335	5/29/2018			Project 208231		
Transaction Date	6/11/2018	Due 0	Cash	10100	**Total**	$554.01
Refer	2408 *METRO WEST INSPECTION SERVI*		Ck# 033529 6/19/2018			
Cash Payment	E 100-42401-310 Other Professional Servi		Pmt 3-16 @ 531 Kayla Lane			$209.88
Invoice 1537	5/30/2018					
Cash Payment	E 100-42401-310 Other Professional Servi		Pmt 11-16 @ 10544 108th Avenue North			$17.50
Invoice 1537	5/30/2018					

CITY OF HANOVER

Payments

Current Period: June 2018

Cash Payment	E 100-42401-310 Other Professional Servi	Pmt 15-16 @ 11673 Riverview Road		$17.50
Invoice 1537	5/30/2018			
Cash Payment	E 100-42401-310 Other Professional Servi	Pmt 23-16 @ 263 River Road		$17.50
Invoice 1537	5/30/2018			
Cash Payment	E 100-42401-310 Other Professional Servi	Pmt 28-16 @ 719 Kayla Lane		$17.50
Invoice 1537	5/30/2018			
Cash Payment	E 100-42401-310 Other Professional Servi	Pmt 32-16 @ 10231 Beebe Lake Road		$58.54
Invoice 1537	5/30/2018			
Cash Payment	E 100-42401-310 Other Professional Servi	Pmt 45-16 @ 10544 108th Avenue North		$29.75
Invoice 1537	5/30/2018			
Cash Payment	E 100-42401-310 Other Professional Servi	Pmt 48-16 @ 10115 Kaitlin Avenue		$128.93
Invoice 1537	5/30/2018			
Cash Payment	E 100-42401-310 Other Professional Servi	Pmt 62-16 @ 851 Kayla Lane		$120.84
Invoice 1537	5/30/2018			
Cash Payment	E 100-42401-310 Other Professional Servi	Pmt 70-16 @ 11577 Erin Street NE		$17.50
Invoice 1537	5/30/2018			
Cash Payment	E 100-42401-310 Other Professional Servi	Pmt 85-16 @ 11629 Crow Hassan Park Road		$128.93
Invoice 1537	5/30/2018			
Cash Payment	E 100-42401-310 Other Professional Servi	Pmt 91-16 @ 1370 Irvine Drive		$17.50
Invoice 1537	5/30/2018			
Cash Payment	E 100-42401-310 Other Professional Servi	Pmt 11-17 @ 11601 10th Street NW		$66.50
Invoice 1537	5/30/2018			
Cash Payment	E 100-42401-310 Other Professional Servi	Pmt 157-17 @ 659 Kayla Lane		$278.45
Invoice 1537	5/30/2018			
Cash Payment	E 100-42401-310 Other Professional Servi	Pmt 3-18 @ 404 River Road NE		$33.25
Invoice 1537	5/30/2018			
Cash Payment	E 100-42401-310 Other Professional Servi	Pmt 13-18 @ 11569 Lynwood Court NE		$49.33
Invoice 1537	5/30/2018			
Transaction Date	6/11/2018	Due 0	Cash 10100 **Total**	$1,209.40
Refer	2386 *MONTICELLO ANIMAL CONTROL*	Ck# 033530 6/19/2018		
Cash Payment	E 100-42700-310 Other Professional Servi	05/08/18 PickUp Cat @ 11808 Riverview Road NE		$53.00
Invoice 839	6/11/2018			
Cash Payment	E 100-42700-310 Other Professional Servi	05/18/18 PickUp Lab Mix @ County Road 19 by Tom Thumb		$53.00
Invoice 839	6/11/2018			
Transaction Date	6/14/2018	Due 0	Cash 10100 **Total**	$106.00
Refer	2377 *RUPP ANDERSON SQUIRES & WA*	Ck# 033531 6/19/2018		
Cash Payment	G 818-20200 Accounts Payable	Methodist Church: April 2018		$205.00
Invoice 7410	6/11/2018		Project 208238	
Cash Payment	G 818-20200 Accounts Payable	Bob Ronning: April 2018		$234.00
Invoice 7411	6/11/2018		Project 208243	
Cash Payment	E 100-41610-304 Legal Fees	Miscellaneous: April 2018		$90.00
Invoice 7411	6/11/2018			
Transaction Date	6/13/2018	Due 0	Cash 10100 **Total**	$529.00
Refer	2390 *SAUCEDO, LUIS*	Ck# 033532 6/19/2018		
Cash Payment	G 100-22000 Deposits	Shelter Damage Deposit Release - 06/10/18 Event		$100.00
Invoice	5/11/2018			

CITY OF HANOVER

Payments

Current Period: June 2018

Transaction Date	6/11/2018	Due 0	Cash	10100	**Total**	$100.00
Refer	2380 *ULTIMATE SAFETY CONCEPTS, IN*		Ck# 033533 6/19/2018			
Cash Payment	E 100-42220-580 Other Equipment		1 Inch Pistol Grip ShutOff, 2 - 50'x7" DJ Hose, 10'x6" Flex Hose, 6 Inch Lowlevel Strainer w/ Jet Siphon			$1,583.74
Invoice 177527	6/5/2018					
Cash Payment	E 100-42210-305 Medical and Dental Fees		Quantitative FIT Testing			$50.00
Invoice 177462	5/30/2018					
Transaction Date	6/13/2018	Due 0	Cash	10100	**Total**	$1,633.74
Refer	2394 *VEIT DISPOSAL SYSTEMS*		Ck# 033534 6/19/2018			
Cash Payment	E 100-43240-384 Refuse/Garbage Dispos		2018 City Clean Up Day - 3 30 Yard Dumpsters			$1,653.00
Invoice 537196	5/27/2018					
Transaction Date	6/11/2018	Due 0	Cash	10100	**Total**	$1,653.00
Refer	2393 *VEOLIA WATER NORTH AMERICA*		Ck# 033535 6/19/2018			
Cash Payment	E 601-43252-310 Other Professional Servi		Water Services - July 2018			$3,076.50
Invoice 90150868	6/15/2018					
Cash Payment	E 602-43252-310 Other Professional Servi		Sewer Services - July 2018			$4,248.50
Invoice 90150868	6/15/2018					
Transaction Date	6/11/2018	Due 0	Cash	10100	**Total**	$7,325.00
Refer	2381 *VERIZON*		Ck# 033536 6/19/2018			
Cash Payment	E 100-42280-321 Telephone		iPad Data Plan - 05/03/18 - 06/02/18			$50.84
Invoice 9808338781	6/2/2018					
Transaction Date	6/13/2018	Due 0	Cash	10100	**Total**	$50.84
Refer	2389 *WEINAND, KELLY*		Ck# 033537 6/19/2018			
Cash Payment	G 100-22000 Deposits		Shelter Damage Deposit Release - 06/09/18 Event			$100.00
Invoice	6/11/2018					
Transaction Date	6/11/2018	Due 0	Cash	10100	**Total**	$100.00
Refer	2391 *WILSON, ALISTAIR & JODY*		Ck# 033538 6/19/2018			
Cash Payment	G 100-22000 Deposits		Shelter Damage Deposit Release - 06/07/18 Event			$100.00
Invoice	6/11/2018					
Transaction Date	6/11/2018	Due 0	Cash	10100	**Total**	$100.00
Refer	2403 *WRIGHT COUNTY AUDITOR-TREA*		Ck# 033539 6/19/2018			
Cash Payment	E 100-42102-310 Other Professional Servi		WC Patrol Services - June 2018			$8,760.00
Invoice June18	5/30/2018					
Transaction Date	6/11/2018	Due 0	Cash	10100	**Total**	$8,760.00
Refer	2404 *WRIGHT COUNTY AUDITOR-TREA*		Ck# 033540 6/19/2018			
Cash Payment	E 100-42102-310 Other Professional Servi		WC Patrol Fines - January 2018			$506.59
Invoice	6/4/2018					
Cash Payment	E 100-42102-310 Other Professional Servi		WC Patrol Fines - February 2018			$309.95
Invoice	6/4/2018					
Cash Payment	E 100-42102-310 Other Professional Servi		WC Patrol Fines - March 2018			$363.29
Invoice	6/4/2018					
Cash Payment	E 100-42102-310 Other Professional Servi		WC Patrol Fines - April 2018			$626.61
Invoice	6/4/2018					
Transaction Date	6/11/2018	Due 0	Cash	10100	**Total**	$1,806.44

CITY OF HANOVER

Payments

Current Period: June 2018

Refer	2397 *WRIGHT COUNTY JOURNAL PRES*		Ck# 033541 6/19/2018			
Cash Payment	G 825-20200 Accounts Payable		Legal Notice: CRH Future West Notice of Public Hearing for PUD / Preliminary Plat			$35.94
Invoice 6057067	5/10/2018					
Transaction Date	6/11/2018	Due 0	Cash	10100	**Total**	$35.94
Refer	2392 *XCEL ENERGY*		Ck# 033542 6/19/2018			
Cash Payment	E 100-43160-381 Electric Utilities		Xcel Owned Street Lighting 05/03/18 - 06/02/18			$840.69
Invoice						
Cash Payment	E 100-43160-381 Electric Utilities		City Owned Street Lighting 05/03/18 - 06/03/18			$978.18
Invoice 594361514	6/4/2018					
Transaction Date	6/11/2018	Due 0	Cash	10100	**Total**	$1,818.87

Fund Summary

	10100 Cash
826 CROW RVR HTS 4TH ADD FINL PLAT	$75.75
825 CROW RVR HTS FUT WEST PLAT/PUD	$2,863.94
824 CROW RVR HTS WEST 3RD PH2 EAW	$934.25
818 MISC ESCROWS FUND	$893.50
817 INFRASTRUCTURE ESCROW FUND	$1,000.00
815 LANDSCAPE ESCROW FUND	$2,000.00
811 EROSION CONTROL ESCROW FUND	$2,000.00
602 SEWER ENTERPRISE FUND	$25,927.50
601 WATER ENTERPRISE FUND	$11,821.82
402 PARKS CAPITAL PROJECTS	$274.61
100 GENERAL FUND	$78,644.99
	$126,436.36

Pre-Written Check	$126,436.36
Checks to be Generated by the Computer	$0.00
Total	$126,436.36

CITY OF HANOVER

*Check Summary Register©

Cks 6/19/2018 - 6/19/2018

	Name	Check Date	Check Amt	
10100 Cash				
Paid Chk# 002368E	AFLAC	6/19/2018	$249.99	Supplemental Insurance - June
Paid Chk# 002369E	AEM FINANCIAL SOLUTIONS, LL	6/19/2018	$2,815.75	2017 Audit Prep Review
Paid Chk# 002370E	BOYER TRUCKS	6/19/2018	$183.91	Freightliner: Scraper Blade wi
Paid Chk# 002371E	CITY OF ST. MICHAEL	6/19/2018	$19,848.00	SAC Fee - 11607 Erin Street
Paid Chk# 002372E	HEALTH PARTNERS	6/19/2018	$3,867.58	Medical & Dental Premiums - Ju
Paid Chk# 002377E	Collaborative Planning LLC	6/19/2018	$7,272.00	General Planning: May 2018
Paid Chk# 033513	AMERICAN PRESSURE INC.	6/19/2018	$64.15	K02-19E Union Screw
Paid Chk# 033514	CARSON, CLELLAND & SCHRED	6/19/2018	$58.83	Legal Support / Work - May 201
Paid Chk# 033515	CENTERPOINT ENERGY	6/19/2018	$168.51	City Hall Gas Utilities: 04/25
Paid Chk# 033516	CENTURY LINK	6/19/2018	$38.20	Fire Station Landline - 05/28/
Paid Chk# 033517	COMCAST	6/19/2018	$221.19	CH: Digital Voice & Internet -
Paid Chk# 033518	COTTENS, INC	6/19/2018	$223.94	Chevy 1 Ton: Credit for Core D
Paid Chk# 033519	FINKEN WATER SOLUTIONS	6/19/2018	$19.00	Cook & Cold Rental Cooler 06/0
Paid Chk# 033520	FIRE SAFETY USA, INC.	6/19/2018	$1,365.00	6 - FX Bullard Helmet with 4"
Paid Chk# 033521	GUENTHER, BRENDA	6/19/2018	$200.00	Hall Damage Deposit Release -
Paid Chk# 033522	HARDWARE HANK	6/19/2018	$154.07	Poly Film Clear
Paid Chk# 033523	JIM LEUER CONSTRUCTION	6/19/2018	$5,000.00	Erosion Control Escrow Release
Paid Chk# 033524	JOINT POWERS WATER BOARD	6/19/2018	$8,484.00	WAC Fee - 411 LaBeaux Avenue
Paid Chk# 033525	KOLASA, STAN	6/19/2018	$100.00	Shelter Damage Deposit Release
Paid Chk# 033526	LEAGUE OF MN CITIES INS. TRU	6/19/2018	$50,220.00	Work Comp Clerical / Office: 0
Paid Chk# 033527	MCKEE, NINA	6/19/2018	$100.00	Shelter Damage Deposit Release
Paid Chk# 033528	MENARDS - BUFFALO	6/19/2018	$554.01	3 - 20# Bags of Hardy Mix Seed
Paid Chk# 033529	METRO WEST INSPECTION SER	6/19/2018	$1,209.40	Pmt 48-16 @ 10115 Kaitlin Aven
Paid Chk# 033530	MONTICELLO ANIMAL CONTROL	6/19/2018	$106.00	05/18/18 PickUp Lab Mix @ Coun
Paid Chk# 033531	Rupp Anderson Squires & Waldsp	6/19/2018	$529.00	Bob Ronning: April 2018
Paid Chk# 033532	SAUCEDO, LUIS	6/19/2018	$100.00	Shelter Damage Deposit Release
Paid Chk# 033533	ULTIMATE SAFETY CONCEPTS,	6/19/2018	$1,633.74	1 Inch Pistol Grip ShutOff, 2
Paid Chk# 033534	VEIT DISPOSAL SYSTEMS	6/19/2018	$1,653.00	2018 City Clean Up Day - 3 30
Paid Chk# 033535	Veolia Water North America	6/19/2018	$7,325.00	Water Services - July 2018
Paid Chk# 033536	Verizon Wireless	6/19/2018	$50.84	iPad Data Plan - 05/03/18 - 06
Paid Chk# 033537	WEINAND, KELLY	6/19/2018	$100.00	Shelter Damage Deposit Release
Paid Chk# 033538	WILSON, ALISTAIR & JODY	6/19/2018	$100.00	Shelter Damage Deposit Release
Paid Chk# 033539	WRIGHT COUNTY AUDITOR-TRE	6/19/2018	$8,760.00	WC Patrol Services - June 2018
Paid Chk# 033540	WRIGHT COUNTY AUDITOR-TRE	6/19/2018	$1,806.44	WC Patrol Fines - April 2018
Paid Chk# 033541	WRIGHT COUNTY JOURNAL PR	6/19/2018	$35.94	Legal Notice: CRH Future West
Paid Chk# 033542	XCEL ENERGY	6/19/2018	$1,818.87	City Owned Street Lighting 05/
		Total Checks	$126,436.36	

FILTER: None

Carson, Clelland & Schreder
ATTORNEYS AT LAW
6300 SHINGLE CREEK PARKWAY STE 305
MINNEAPOLIS, MN 55430-2190
(763)-561-2800

June 01, 2018

CITY OF HANOVER
CITY ADMINISTRATOR
11250 5TH STREET NE
HANOVER, MN 55341

Professional Services

		Amount
	Criminal	
4/30/2018	Phone call with complainant regarding updated input	16.25
5/25/2018	Open criminal files, preparation of criminal complaints; preparation of cases for court calendars, including court and jury trials; contact and notice to witnesses for trial testimony, prepare outgoing discovery requests, complete incoming discovery requests for monthly period	9.38
	Open criminal files, preparation of criminal complaints; preparation of cases for court calendars, including court and jury trials; contact and notice to witnesses for trial testimony, prepare outgoing discovery requests, complete incoming discovery requests for monthly period	18.75
	SUBTOTAL:	[44.38]
	For professional services rendered	**$44.38**
	Client Expense Charges :	
	Criminal Expenses:	
Monthly support fee for April		14.45
	SUBTOTAL:	[14.45]
	Total Client Expense Charges	**$14.45**
	Total amount of this bill	**$58.83**
	Previous balance	**$46.96**
5/22/2018	Payment - thank you	($46.96)

JUN 4 2018

	Amount
Total payments and adjustments	**($46.96)**
Balance due	**$58.83**

I hereby declare under the penalties of perjury that the foregoing statement for legal services is just and correct and that no part thereof has been paid.

John J. Thames, City Attorney

30.70 = April

28.13 = May

58.83

E# 100-41610-304
City Attorney
↳ Legal Fees

2377

Collaborative Planning, LLC
PO Box 251
Medina, MN 55340
763-473-0569

INVOICE

BILL TO
City of Hanover
PO Box 278
Hanover, MN 55341

INVOICE # 2018-092
DATE 06/13/2018

PROJECT
General Planning

DATE	ACCOUNT SUMMARY	AMOUNT
05/30/2018	Balance Forward	$1,313.00
	Payments and credits between 05/30/2018 and 06/13/2018	-1,313.00
	New charges (details below)	2,979.50
	Total Amount Due	$2,979.50

DATE		ACTIVITY	QTY	RATE	AMOUNT
		City of Hanover:Hanover General Planning:2040 Hanover Comprehensive Plan			
		Billable Time			
05/02/2018	Emails with Brian, preparing info for Council.	CMN	1:30	101.00	151.50
05/03/2018	Preparing info.	CMN	1:00	101.00	101.00
05/04/2018	Prepare packet for City Council.	CMN	2:15	101.00	227.25
05/09/2018	Prep for and attend Comp Plan meeting.	CMN	5:45	101.00	580.75
05/10/2018	Drafting.	CMN	1:15	101.00	126.25
05/21/2018	Drafting.	CMN	1:45	101.00	176.75
05/22/2018	Drafting.	CMN	1:30	101.00	151.50
		Subtotal: Billable Time			1,515.00
		SUBTOTAL - City of Hanover:Hanover General Planning:2040			1,515.00

DATE		ACTIVITY	QTY	RATE	AMOUNT
		Hanover Comprehensive Plan			
		City of Hanover:Hanover General Planning:Hanover General Planning			
		Billable Time			
05/01/2018	Review 880 Mallard site plan, phone conference with Justin, phone conference with Amy. Email from Brian, review mining EAW/EIS, phone conference with Brian.	CMN	1:15	101.00	126.25
05/02/2018	Email to Amy re: 880 Mallard. Phone conference with developer re: Anderson. Phone conference with Amy re: Astro.	CMN	1:15	101.00	126.25
05/07/2018	Preparing shoreland ordinance.	CMN	0:30	101.00	50.50
05/08/2018	Review property on Crow Hassan Park Road, phone conference with Amy. Emails re: PC packets.	CMN	0:30	101.00	50.50
05/10/2018	Phone conference with Amy re: Astro, review property, phone conference with architect, email to Justin.	CMN	0:45	101.00	75.75
05/14/2018	Emails re: 880 Mallard, 10496 Kalland. Astro Engineering. Review pool request, phone conference with Amy, email to Amy. Phone conference with Justin. Phone conference with builder. Prepare sketch for 880, email to builder. Various with Amy re: PC agenda.	CMN	2:45	101.00	277.75
05/15/2018	Phone conference with Justin, review plans for 880 Mallard, draft memo, various emails. Phone conference with Amy. Emails re: Overlook and Riverview Road properties.	CMN	1:45	101.00	176.75
05/16/2018	Review as built for 9813 Jasmine, various emails.	CMN	0:15	101.00	25.25
05/17/2018	Reviewing 11711 Riverview deck request, various emails.	CMN	0:15	101.00	25.25
05/21/2018	Review building permit for 10633 106th. Review 527 Overlook, provide info to Amy, phone	CMN	0:45	101.00	75.75

DATE		ACTIVITY	QTY	RATE	AMOUNT
	conference with Amy.				
05/22/2018	Preparing shoreland ordinance.	CMN	1:30	101.00	151.50
05/24/2018	Phone conference with architect for industrial building.	CMN	0:15	101.00	25.25
05/25/2018	Reviewing building permits, phone conference with Amy. Review draft PC minutes, email to Amy. Preparing shoreland ordinance.	CMN	2:15	101.00	227.25
05/29/2018	Phone conference with Brian re: pool, building permits.	CMN	0:15	101.00	25.25
05/30/2018	Phone conference with Brian re: Astro Engineering.	CMN	0:15	101.00	25.25
		Subtotal:			1,464.50
		SUBTOTAL - City of Hanover:Hanover General Planning:Hanover General Planning			1,464.50

TOTAL OF NEW CHARGES	2,979.50
BALANCE DUE	**$2,979.50**

E# 100-41910-310

Planning & Zoning
↳ Other Prof. Svcs.

Collaborative Planning, LLC
PO Box 251
Medina, MN 55340
763-473-0569

INVOICE

BILL TO
City of Hanover
PO Box 278
Hanover, MN 55341

INVOICE # 2018-093
DATE 06/13/2018

PROJECT
CRH West EAW

3rd Addition

DATE	ACCOUNT SUMMARY	AMOUNT
05/30/2018	Balance Forward	$1,489.75
	Payments and credits between 05/30/2018 and 06/13/2018	-1,489.75
	New charges (details below)	934.25
	Total Amount Due	$934.25

DATE		ACTIVITY	QTY	RATE	AMOUNT
05/01/2018	Prepare webpage information, email to Brian/Amy. Phone conference with Brian, email to Andrew. Email to Todd.	CMN	0:30	101.00	50.50
05/02/2018	Phone conference with Brian, email with reporter.	CMN	0:15	101.00	25.25
05/03/2018	Emails with Mn/DOT.	CMN	0:15	101.00	25.25
05/14/2018	Review comments from Wright County Engineering. Prepare item for PC meeting.	CMN	0:45	101.00	75.75
05/24/2018	Preparing EAW record. Phone conference with Brian.	CMN	1:15	101.00	126.25
05/25/2018	Preparing record of decision.	CMN	1:15	101.00	126.25
05/26/2018	Review letter from SHPO.	CMN	0:15	101.00	25.25
05/30/2018	Review letter from MPCA, various emails.	CMN	0:30	101.00	50.50
05/31/2018	Phone conference with Brian re: comment letters. Drafting response to comments, record of decision and resolution.	CMN	4:15	101.00	429.25

TOTAL OF NEW CHARGES 934.25

BALANCE DUE $934.25

G # 824-20200

CRHW 3rd Addition Phase 2 EAW

↳ A|P

Collaborative Planning, LLC
PO Box 251
Medina, MN 55340
763-473-0569

INVOICE

BILL TO
City of Hanover
PO Box 278
Hanover, MN 55341

INVOICE # 2018-094
DATE 06/13/2018

PROJECT
CRH West Prelim Plat Future West

DATE	ACCOUNT SUMMARY	AMOUNT
05/30/2018	Balance Forward	$580.75
	Payments and credits between 05/30/2018 and 06/13/2018	-580.75
	New charges (details below)	2,828.00
	Total Amount Due	$2,828.00

DATE		ACTIVITY	QTY	RATE	AMOUNT
05/02/2018	Draft public mailer, email to staff. Email to Todd. Reviewing plans. Prepare public hearing notice, email to newspaper.	CMN	2:15	101.00	227.25
05/03/2018	Review plans, review comment letter from engineering.	CMN	0:30	101.00	50.50
05/07/2018	Various emails. Reviewing plans.	CMN	1:00	101.00	101.00
05/08/2018	Reviewing plans.	CMN	0:45	101.00	75.75
05/10/2018	Preparing staff report, reviewing plans.	CMN	1:30	101.00	151.50
05/11/2018	Review plans, draft comment memo, various emails. Phone call with Brian, edit comment memo.	CMN	1:45	101.00	176.75
05/14/2018	Prepare staff report and item for PC agenda, email to Amy.	CMN	1:45	101.00	176.75
05/15/2018	Various emails re: pc packets. Emails with resident re: comments.	CMN	0:45	101.00	75.75
05/17/2018	Emails re: grading plan.	CMN	0:15	101.00	25.25
05/18/2018	Various emails re: escrows, phone conference with Jackie.	CMN	0:45	101.00	75.75
05/21/2018	Phone conference with Amy. Phone conference with Jackie. Email to Todd re: grading, escrows.	CMN	0:30	101.00	50.50

DATE		ACTIVITY	QTY	RATE	AMOUNT
05/22/2018	Emails re: public comments. Prepping for PC meeting.	CMN	0:45	101.00	75.75
05/23/2018	Prepare for Planning Commission meeting, phone conference with Amy, phone conference with Todd. Various emails re: meeting, comments, grading agreement. Attend Planning Commission meeting.	CMN	5:30	101.00	555.50
05/24/2018	Phone conference with Brian. Preparing conditions.	CMN	0:45	101.00	75.75
05/25/2018	Email to St. Michael staff. Emails with Amy. Phone conference with Brian. Reviewing plans.	CMN	1:30	101.00	151.50
05/29/2018	Email to Justin re: plan review. Preparing PUD resolution, emails with Todd. Phone conference with Jay re: grading agreement, emails re: grading agreement, plans. Phone conference with Brian. Phone conference with Finance/Commerce. Prepare info for grading agreement.	CMN	3:45	101.00	378.75
05/30/2018	Emails re: wetlands permitting, grading agreement. Emails re: St. Michael comments.	CMN	0:45	101.00	75.75
05/31/2018	Emails re: TEP meeting, phone conference with Brian. Addressing St. Michael comments. Review grading agreement, email to Jay, various emails. Emails with residents. Preparing resolution, staff report.	CMN	3:15	101.00	328.25

TOTAL OF NEW CHARGES	2,828.00
BALANCE DUE	$2,828.00

G# 825-20200
CRH Future West PUD/Preliminary Plat
↳ A/P

Collaborative Planning, LLC
PO Box 251
Medina, MN 55340
763-473-0569

INVOICE

BILL TO
Crow River Heights West 4th Addition
PO Box 278
Hanover, MN 55341

INVOICE # 2018-095
DATE 06/13/2018

PROJECT
CRH West 4th Addition Final Plat

DATE		ACTIVITY	QTY	RATE	AMOUNT
05/11/2018	Emails with Todd.	CMN	0:15	101.00	25.25
05/18/2018	Emails re: final plat submittal, grading agreement.	CMN	0:15	101.00	25.25
05/29/2018	Email to Justin re: final plat, review.	CMN	0:15	101.00	25.25

BALANCE DUE **$75.75**

G# 826-20200

CRH 4th Addition Final Plat

↳ A|P

Collaborative Planning, LLC
PO Box 251
Medina, MN 55340
763-473-0569

INVOICE

BILL TO
City of Hanover
PO Box 278
Hanover, MN 55341

INVOICE # 2018-096
DATE 06/13/2018

PROJECT
Hanover Dental

DATE	ACCOUNT SUMMARY	AMOUNT
05/30/2018	Balance Forward	$429.25
	Payments and credits between 05/30/2018 and 06/13/2018	-429.25
	New charges (details below)	151.50
	Total Amount Due	$151.50

DATE		ACTIVITY	QTY	RATE	AMOUNT
05/03/2018	Phone conference with Amy. Phone conference with contractor, phone conference with Amy, email to Amy.	CMN	0:30	101.00	50.50
05/05/2018	Emails re: updated plans.	CMN	0:15	101.00	25.25
05/08/2018	Phone conference with contractor, email to Amy.	CMN	0:15	101.00	25.25
05/11/2018	Review building permit submittal.	CMN	0:30	101.00	50.50

TOTAL OF NEW CHARGES	151.50
BALANCE DUE	$151.50

GM

G# 818-20200
Misc. Escrows
↳ A/P

Project # 208244

Collaborative Planning, LLC
PO Box 251
Medina, MN 55340
763-473-0569

INVOICE

BILL TO
City of Hanover
PO Box 278
Hanover, MN 55341

INVOICE # 2018-097
DATE 06/13/2018

PROJECT
Paxmar Concept Plan

DATE	ACCOUNT SUMMARY	AMOUNT
05/30/2018	Balance Forward	$757.50
	Payments and credits between 05/30/2018 and 06/13/2018	-757.50
	New charges (details below)	75.75
	Total Amount Due	$75.75

DATE		ACTIVITY	QTY	RATE	AMOUNT
05/22/2018	Emails re: survey. Review title commitment, ALTA info, email to Jason.	**CMN**	0:45	101.00	75.75

TOTAL OF NEW CHARGES	75.75
BALANCE DUE	**$75.75**

JH

G # 818-20200
Misc. Escrows
↳ A|P

Project # 208240

Collaborative Planning, LLC
PO Box 251
Medina, MN 55340
763-473-0569

INVOICE

BILL TO
City of Hanover
PO Box 278
Hanover, MN 55341

INVOICE # 2018-098
DATE 06/13/2018

PROJECT
Paxmar EAW

DATE	ACCOUNT SUMMARY	AMOUNT
05/30/2018	Balance Forward	$25.25
	Payments and credits between 05/30/2018 and 06/13/2018	-25.25
	New charges (details below)	227.25
	Total Amount Due	$227.25

DATE		ACTIVITY	QTY	RATE	AMOUNT
05/08/2018	Review environmental questionairre from Brian, email to Brian.	CMN	0:15	101.00	25.25
05/09/2018	Emails re: schedule, update schedule, various emails. Draft alternate schedule, various emails. Phone conference with Brian.	CMN	1:15	101.00	126.25
05/16/2018	Phone conference with Jason re: schedule, EAW. Phone conference with Brian.	CMN	0:30	101.00	50.50
05/17/2018	Email to Justin re: schedule.	CMN	0:15	101.00	25.25

TOTAL OF NEW CHARGES	227.25
BALANCE DUE	$227.25

gp

G# 818-20200
Misc. Escrows
↳ A/P

Project # 208245

Rupp, Anderson, Squires & Waldspurger, P.A.

333 South Seventh Street, Suite 2800
Minneapolis, MN 55402
Office (612) 436-4300 Fax (612) 436-4340
www.raswlaw.com

Federal Tax ID 46-1641135

Statement as of: 4/30/2018
Statement Date: 6/11/2018
Statement No. 7410

City of Hanover
11250 5th St NE
Hanover, MN 55341

4011(3)-0017: Transfer of Property From Church to City	205.00
Total Fees and Expenses:	$205.00
Previous Balance:	-
Total Now Due:	**$205.00**

JUN 13 2018

Rupp, Anderson, Squires & Waldspurger, P.A.

333 South Seventh Street, Suite 2800
Minneapolis, MN 55402
Office (612) 436-4300 Fax (612) 436-4340
www.raswlaw.com

Federal Tax ID 46-1641135

Statement as of: 4/30/2018
Statement Date: 6/11/2018
Statement No. 7410

City of Hanover
11250 5th St NE
Hanover, MN 55341

4011(3)-0017: Transfer of Property From Church to City

		Hours	Rate	Amount
04/16/2018 ZJC	Telephone conference with president of historical society regarding question related to well; Review correspondence from president regarding the same; Legal research regarding well disclosure certificates.	0.30	205.00	61.50
04/18/2018 ZJC	Complete legal research regarding well disclosure certificates; Read and respond to e-mails from Hanover Historical Society president Joe Kaul regarding the same; Telephone conferences with Joe regarding the same.	0.70	205.00	143.50
	Sub-total Fees:			$205.00

Rate Summary

Zachary J. Cronen	1.00	hours at $205.00/hr	205.00
Total hours:	1.00		205.00

Total Fees and Expenses: $205.00
Previous Balance: -
Total Now Due: $205.00

I declare under the penalties of law that this account is just and correct and that no part of it has been paid.

Ann Thorne
Accounts Manager

G# 818-20200
Misc. Escrows
↳ A/P

Project # 208238

Rupp, Anderson, Squires & Waldspurger, P.A.

333 South Seventh Street, Suite 2800
Minneapolis, MN 55402
Office (612) 436-4300 Fax (612) 436-4340
www.raswlaw.com

Federal Tax ID 46-1641135

Statement as of: 4/30/2018
Statement Date: 6/11/2018
Statement No. 7411

City of Hanover
Mr. Brian Hagen
11250 5th St NE
Hanover, MN 55341

4011(1)-0001: Miscellaneous	324.00
Total Fees and Expenses:	$324.00
Previous Balance:	-
Total Now Due:	**$324.00**

JUN 13 2018

Rupp, Anderson, Squires & Waldspurger, P.A.

333 South Seventh Street, Suite 2800
Minneapolis, MN 55402
Office (612) 436-4300 Fax (612) 436-4340
www.raswlaw.com

Federal Tax ID 46-1641135

Statement as of: 4/30/2018
Statement Date: 6/11/2018
Statement No. 7411

City of Hanover
Mr. Brian Hagen
11250 5th St NE
Hanover, MN 55341

4011(1)-0001: Miscellaneous

		Hours	Rate	Amount
04/02/2018 ARK	Review and analyze electronic correspondence with client regarding easement agreement for 8th Street; Draft easement agreement; Draft electronic correspondence to City Administrator Brian Hagen regarding and attaching the same.	1.10	180.00	198.00
04/02/2018 JTS	Review Brian e-mail regarding driveway agreement and new easement; Office conference with associate regarding preparation of same.	0.20	180.00	36.00
04/19/2018 JTS	Jackie e-mail regarding availability of water and sewer question; review and analyze chapter 9 of city code pertinent to issue; e-mail to client with response to question. - Anderson Property	0.50	180.00	90.00
	Sub-total Fees:			$324.00

234.00 = G# 818-20200
Misc. Escrows
↳ A/P
Bob Ronning
Project # 208243

Rate Summary

Jay T. Squires	0.70 hours at $180.00/hr	126.00	
Abbi R. Kelzer	1.10 hours at $180.00/hr	198.00	
Total hours:	1.80	324.00	

Total Fees and Expenses:	$324.00
Previous Balance:	-
Total Now Due:	**$324.00**

I declare under the penalties of law that this account is just and correct and that no part of it has been paid.

Ann Thorne
Accounts Manager

90.00 = E# 100-41610-304
City Attorney
↳ Legal Fees

CITY OF HANOVER
Cash Balances
June 2018

Fund	Begin Month	GL Debits Month	GL Credits Month	Balance
100 GENERAL FUND	$280,341.06	$31.16	$155,637.06	$124,735.16
107 FIRE DEPT DONATIONS FUND	$21,019.28	$0.00	$0.00	$21,019.28
201 EDA SPECIAL REVENUE FUND	$59,593.07	$0.00	$3,588.00	$56,005.07
205 EDA BUSINESS INCENTIVE FUND	$249,068.36	$0.00	$0.00	$249,068.36
311 2008A GO CIP REFUNDING BOND	$45,006.28	$0.00	$0.00	$45,006.28
312 2009A GO IMP REFUNDING BOND	$5,242.50	$0.00	$0.00	$5,242.50
313 2010 GO EQUIPMENT CERTIFICATES	$0.00	$0.00	$0.00	$0.00
314 2011A GO IMP CROSSOVER REF BD	$428,550.03	$0.00	$0.00	$428,550.03
315 2016A GO CIP BOND	$5,422.25	$0.00	$0.00	$5,422.25
401 GENERAL CAPITAL PROJECTS	$1,343,879.87	$0.00	$0.00	$1,343,879.87
402 PARKS CAPITAL PROJECTS	$112,902.02	$0.00	$847.13	$112,054.89
403 FIRE DEPT CAPITAL FUND	$238,011.97	$0.00	$0.00	$238,011.97
404 HISTORICAL CAPITAL PROJ FUND	$0.00	$0.00	$0.00	$0.00
405 PARK DEDICATION FEE	$2,740.00	$0.00	$0.00	$2,740.00
407 TIF REDEV DIST #1	$7,068.92	$0.00	$0.00	$7,068.92
409 MAHLER PIT - 15TH ST IMP FUND	$10,230.12	$0.00	$0.00	$10,230.12
411 FACILITIES CAPITAL PROJ FUND	-$437,975.51	$0.00	$0.00	-$437,975.51
417 EQUIPMENT CAPITAL FUND	$114,335.90	$0.00	$0.00	$114,335.90
418 STREET CAPITAL PROJ FUND	$690,714.76	$0.00	$1,710.50	$689,004.26
601 WATER ENTERPRISE FUND	$867,874.49	$0.00	$11,821.82	$856,052.67
602 SEWER ENTERPRISE FUND	$414,601.93	$0.00	$25,927.50	$388,674.43
603 STORM WATER ENTERPRISE FUND	$121,651.68	$0.00	$887.38	$120,764.30
611 WATER CAPITAL IMP FUND	$137,857.92	$0.00	$0.00	$137,857.92
612 SEWER CAPITAL IMP FUND	$1,850,168.31	$0.00	$0.00	$1,850,168.31
613 STORM WATER CAPITAL IMP FUND	$552,929.07	$0.00	$0.00	$552,929.07
701 RIVER ROAD CEMETERY	$35,981.74	$0.00	$0.00	$35,981.74
804 SCHENDELS FIELD ESC FUND	$0.00	$0.00	$0.00	$0.00
809 BRIDGES AT HANOVER ESC FUND	$0.00	$0.00	$0.00	$0.00
811 EROSION CONTROL ESCROW FUND	$40,000.00	$0.00	$2,000.00	$38,000.00
815 LANDSCAPE ESCROW FUND	$36,000.00	$0.00	$2,000.00	$34,000.00
817 INFRASTRUCTURE ESCROW FUND	$22,000.00	$0.00	$1,000.00	$21,000.00
818 MISC ESCROWS FUND	$13,560.86	$0.00	$3,253.00	$10,307.86
820 BRIDGES TOWNHOMES ESC FUND	$3,606.78	$0.00	$0.00	$3,606.78
821 QUAIL PASS 2ND ADD ESCROW FD	$0.00	$0.00	$0.00	$0.00
823 CROW RVR HTS WEST 3RD / BACKES	$148,318.92	$0.00	$1,120.00	$147,198.92
824 CROW RVR HTS WEST 3RD PH2 EAW	$8,954.13	$0.00	$2,424.00	$6,530.13
825 CROW RVR HTS FUT WEST PLAT/PUD	$40,331.25	$0.00	$4,103.19	$36,228.06
826 CROW RVR HTS 4TH ADD FINL PLAT	$3,000.00	$0.00	$75.75	$2,924.25
900 INTEREST	$1,230.99	$0.00	$0.00	$1,230.99

CITY OF HANOVER

Cash Balances

June 2018

Fund	Begin Month	GL Debits Month	GL Credits Month	Balance
	$7,474,218.95	$31.16	$216,395.33	$7,257,854.78

CITY OF HANOVER
Revenue Budget by Source - General Fund

Source Alt Code	Account Descr	June 2018 Amt	2018 YTD Amt	2018 YTD Budget	2018 YTD Balance	%YTD Budget
Fund 100 GENERAL FUND						
TAXES	R 100-31000 Property Taxes - General	$0.00	$0.00	$881,449.00	$881,449.00	0.00%
TAXES	R 100-31020 Property Taxes - Fire	$0.00	$0.00	$129,904.00	$129,904.00	0.00%
TAXES	R 100-31800 Franchise Fees	$0.00	$3,738.97	$15,000.00	$11,261.03	24.93%
Source Alt Code TAXES		$0.00	$3,738.97	$1,026,353.00	$1,022,614.03	0.36%
SERVICE	R 100-34000 Charges for Services	$0.00	$3,759.00	$0.00	-$3,759.00	0.00%
SERVICE	R 100-34101 City Hall Rent Revenue	$0.00	$4,525.00	$10,000.00	$5,475.00	45.25%
SERVICE	R 100-34107 Assessment Search Fees	$0.00	$375.00	$400.00	$25.00	93.75%
SERVICE	R 100-34108 Administrative Fees	$0.00	$3,550.00	$2,000.00	-$1,550.00	177.50%
SERVICE	R 100-34109 Copies/Faxes	$0.00	$16.00	$75.00	$59.00	21.33%
SERVICE	R 100-34206 Other Public Safety Charges	$0.00	$300.00	$0.00	-$300.00	0.00%
SERVICE	R 100-34207 Fire Protection Services	$0.00	$41,947.60	$140,661.00	$98,713.40	29.82%
SERVICE	R 100-34403 Recycling Rev/Reimb	$0.00	$1,111.60	$6,000.00	$4,888.40	18.53%
SERVICE	R 100-34780 Park Rental Fees	$0.00	$1,250.00	$3,000.00	$1,750.00	41.67%
SERVICE	R 100-34940 Cemetery Revenues	$0.00	$1,500.00	$2,000.00	$500.00	75.00%
Source Alt Code SERVICE		$0.00	$58,334.20	$164,136.00	$105,801.80	35.54%
MISC	R 100-36100 Special Assessments	$0.00	$0.00	$500.00	$500.00	0.00%
MISC	R 100-36200 Miscellaneous Revenues	$0.00	$337.53	$900.00	$562.47	37.50%
MISC	R 100-36210 Interest Earnings	$0.00	$1,509.11	$3,000.00	$1,490.89	50.30%
MISC	R 100-36215 Investment Income/Loss	$0.00	-$2,574.41	$6,000.00	$8,574.41	-42.91%
MISC	R 100-36230 Contributions and Donations	$0.00	$375.00	$2,000.00	$1,625.00	18.75%
MISC	R 100-36235 Insurance Dividends	$0.00	$0.00	$8,000.00	$8,000.00	0.00%
MISC	R 100-36250 Damage Deposits	$0.00	$0.00	$0.00	$0.00	0.00%
MISC	R 100-36260 Refunds or Reimbursements	$0.00	$29.38	$0.00	-$29.38	0.00%
MISC	R 100-36290 Sale of Vehicles/Equipment	$0.00	$0.00	$0.00	$0.00	0.00%
MISC	R 100-39101 Sales of General Fixed Asset	$0.00	$0.00	$0.00	$0.00	0.00%
MISC	R 100-39203 Transfer from Other Fund	$0.00	$0.00	$0.00	$0.00	0.00%
Source Alt Code MISC		$0.00	-$323.39	$20,400.00	$20,723.39	-1.59%
LIC PERM	R 100-32110 Alchoholic Beverages	$0.00	$7,020.00	$10,370.00	$3,350.00	67.70%
LIC PERM	R 100-32180 Other Bus. Licenses/Permits	$0.00	$1,140.00	$400.00	-$740.00	285.00%
LIC PERM	R 100-32210 Building Permits	$0.00	$37,776.53	$140,000.00	$102,223.47	26.98%
LIC PERM	R 100-32240 Animal Licenses	$0.00	$0.00	$100.00	$100.00	0.00%
LIC PERM	R 100-32260 Solid Waste Hauler Licenses	$0.00	$1,250.00	$1,500.00	$250.00	83.33%
LIC PERM	R 100-32270 Rental Dwelling Licenses	$0.00	$0.00	$800.00	$800.00	0.00%
LIC PERM	R 100-32280 Other Non-Business Lic/Per	$0.00	$1.00	$50.00	$49.00	2.00%
Source Alt Code LIC PERM		$0.00	$47,187.53	$153,220.00	$106,032.47	30.80%
INTGOVT	R 100-33400 State Grants and Aids	$0.00	$0.00	$0.00	$0.00	0.00%
INTGOVT	R 100-33401 Local Government Aid	$0.00	$0.00	$117,651.00	$117,651.00	0.00%
INTGOVT	R 100-33410 MV Credit	$0.00	$0.00	$0.00	$0.00	0.00%
INTGOVT	R 100-33420 PERA Aid	$0.00	$0.00	$339.00	$339.00	0.00%
INTGOVT	R 100-33422 State Fire Aid	$0.00	$0.00	$39,000.00	$39,000.00	0.00%
INTGOVT	R 100-33426 State Police Aid	$0.00	$0.00	$5,500.00	$5,500.00	0.00%
INTGOVT	R 100-33610 County Grants/Aid for Roads	$0.00	$0.00	$0.00	$0.00	0.00%
Source Alt Code INTGOVT		$0.00	$0.00	$162,490.00	$162,490.00	0.00%
FINES	R 100-35100 Court Fines	$0.00	$2,492.96	$2,000.00	-$492.96	124.65%
Source Alt Code FINES		$0.00	$2,492.96	$2,000.00	-$492.96	124.65%
Fund 100 GENERAL FUND		$0.00	$111,430.27	$1,528,599.00	$1,417,168.73	7.29%

CITY OF HANOVER

Revenue Budget by Source - General Fund

Source Alt Code	Account Descr	June 2018 Amt	2018 YTD Amt	2018 YTD Budget	2018 YTD Balance	%YTD Budget
		$0.00	$111,430.27	$1,528,599.00	$1,417,168.73	7.29%

CITY OF HANOVER
Expenditure Budget Report - General Fund

Dept Abbrev	Account Descr	June 2018 Amt	2018 YTD Amt	2018 YTD Budget	2018 YTD Balance	%YTD Budget
Fund 100 GENERAL FUND						
Dept 41110 Council						
COUNCIL	E 100-41110-111 Committee Wages/Mee	$0.00	$0.00	$13,000.00	$13,000.00	0.00%
COUNCIL	E 100-41110-122 FICA	$0.00	$0.00	$806.00	$806.00	0.00%
COUNCIL	E 100-41110-123 Medicare	$0.00	$0.00	$189.00	$189.00	0.00%
COUNCIL	E 100-41110-208 Training and Instructio	$0.00	$300.00	$400.00	$100.00	75.00%
COUNCIL	E 100-41110-306 Dues & Subscriptions	$0.00	$2,653.85	$7,500.00	$4,846.15	35.38%
COUNCIL	E 100-41110-331 Travel Expenses	$0.00	$0.00	$500.00	$500.00	0.00%
COUNCIL	E 100-41110-437 Other Miscellaneous	$588.55	$1,113.55	$17,503.00	$16,389.45	6.36%
Dept 41110 Council		$588.55	$4,067.40	$39,898.00	$35,830.60	10.19%
Dept 41330 Boards and Commissions						
BRDCOMM	E 100-41330-111 Committee Wages/Mee	$0.00	$0.00	$4,000.00	$4,000.00	0.00%
BRDCOMM	E 100-41330-208 Training and Instructio	$0.00	$0.00	$500.00	$500.00	0.00%
BRDCOMM	E 100-41330-331 Travel Expenses	$0.00	$0.00	$100.00	$100.00	0.00%
Dept 41330 Boards and Commissions		$0.00	$0.00	$4,600.00	$4,600.00	0.00%
Dept 41400 City Administrator						
CITYADM	E 100-41400-101 Full-Time Employees R	$5,541.52	$31,633.85	$72,040.00	$40,406.15	43.91%
CITYADM	E 100-41400-121 PERA	$415.62	$2,490.18	$5,403.00	$2,912.82	46.09%
CITYADM	E 100-41400-122 FICA	$343.58	$2,058.55	$4,466.00	$2,407.45	46.09%
CITYADM	E 100-41400-123 Medicare	$80.36	$481.47	$1,045.00	$563.53	46.07%
CITYADM	E 100-41400-134 Employer Paid Life	$31.38	$188.28	$400.00	$211.72	47.07%
CITYADM	E 100-41400-151 Med/Dental Insurance	$691.40	$4,148.40	$8,400.00	$4,251.60	49.39%
CITYADM	E 100-41400-208 Training and Instructio	$0.00	$1,161.04	$1,500.00	$338.96	77.40%
CITYADM	E 100-41400-306 Dues & Subscriptions	$0.00	$91.72	$500.00	$408.28	18.34%
Dept 41400 City Administrator		$7,103.86	$42,253.49	$93,754.00	$51,500.51	45.07%
Dept 41410 Elections						
ELECTION	E 100-41410-200 Office Supplies (GENER	$0.00	$0.00	$5,000.00	$5,000.00	0.00%
ELECTION	E 100-41410-310 Other Professional Serv	$32.42	$32.42	$5,000.00	$4,967.58	0.65%
ELECTION	E 100-41410-351 Legal Notices Publishin	$0.00	$0.00	$300.00	$300.00	0.00%
ELECTION	E 100-41410-400 Repairs & Maint Cont (	$0.00	$0.00	$1,500.00	$1,500.00	0.00%
Dept 41410 Elections		$32.42	$32.42	$11,800.00	$11,767.58	0.27%
Dept 41430 Clerical Staff						
CLERICAL	E 100-41430-101 Full-Time Employees R	$3,516.80	$20,149.24	$45,718.00	$25,568.76	44.07%
CLERICAL	E 100-41430-121 PERA	$263.76	$1,585.48	$3,429.00	$1,843.52	46.24%
CLERICAL	E 100-41430-122 FICA	$218.04	$1,310.65	$2,835.00	$1,524.35	46.23%
CLERICAL	E 100-41430-123 Medicare	$51.00	$306.56	$663.00	$356.44	46.24%
CLERICAL	E 100-41430-134 Employer Paid Life	$125.90	$755.38	$1,600.00	$844.62	47.21%
CLERICAL	E 100-41430-142 Unemployment Benefit	$0.00	$0.00	$0.00	$0.00	0.00%
CLERICAL	E 100-41430-151 Med/Dental Insurance	$700.02	$4,200.12	$8,400.00	$4,199.88	50.00%
CLERICAL	E 100-41430-208 Training and Instructio	$0.00	$0.00	$500.00	$500.00	0.00%
CLERICAL	E 100-41430-306 Dues & Subscriptions	$0.00	$22.50	$250.00	$227.50	9.00%
Dept 41430 Clerical Staff		$4,875.52	$28,329.93	$63,395.00	$35,065.07	44.69%
Dept 41435 Staff Expenses						
STAFFEXP	E 100-41435-260 Uniforms	$0.00	$200.00	$300.00	$100.00	66.67%
STAFFEXP	E 100-41435-310 Other Professional Serv	$0.00	$240.00	$500.00	$260.00	48.00%
STAFFEXP	E 100-41435-331 Travel Expenses	$338.52	$383.43	$2,000.00	$1,616.57	19.17%
Dept 41435 Staff Expenses		$338.52	$823.43	$2,800.00	$1,976.57	29.41%
Dept 41530 Accounting						
ACCTING	E 100-41530-101 Full-Time Employees R	$4,080.00	$23,305.47	$53,040.00	$29,734.53	43.94%
ACCTING	E 100-41530-121 PERA	$306.00	$1,836.00	$3,978.00	$2,142.00	46.15%

Dept Abbrev	Account Descr	June 2018 Amt	2018 YTD Amt	2018 YTD Budget	2018 YTD Balance	%YTD Budget
ACCTING	E 100-41530-122 FICA	$251.64	$1,509.84	$3,288.00	$1,778.16	45.92%
ACCTING	E 100-41530-123 Medicare	$58.84	$353.04	$769.00	$415.96	45.91%
ACCTING	E 100-41530-134 Employer Paid Life	$86.36	$518.16	$1,100.00	$581.84	47.11%
ACCTING	E 100-41530-151 Med/Dental Insurance	$700.00	$4,200.00	$8,400.00	$4,200.00	50.00%
ACCTING	E 100-41530-208 Training and Instructio	$0.00	$0.00	$1,000.00	$1,000.00	0.00%
ACCTING	E 100-41530-306 Dues & Subscriptions	$0.00	$41.66	$250.00	$208.34	16.66%
ACCTING	E 100-41530-310 Other Professional Serv	$2,815.75	$2,815.75	$5,000.00	$2,184.25	56.32%
Dept 41530 Accounting		$8,298.59	$34,579.92	$76,825.00	$42,245.08	45.01%
Dept 41540 Auditing						
AUDITING	E 100-41540-301 Auditing and Acctg Ser	$3,400.00	$21,050.00	$21,050.00	$0.00	100.00%
Dept 41540 Auditing		$3,400.00	$21,050.00	$21,050.00	$0.00	100.00%
Dept 41550 Assessing						
ASSESS G	E 100-41550-310 Other Professional Serv	$12,755.50	$12,766.50	$20,000.00	$7,233.50	63.83%
Dept 41550 Assessing		$12,755.50	$12,766.50	$20,000.00	$7,233.50	63.83%
Dept 41570 Purchasing						
PURCHASE	E 100-41570-200 Office Supplies (GENER	$218.33	$1,918.03	$3,500.00	$1,581.97	54.80%
PURCHASE	E 100-41570-205 Bank Fees	$0.00	-$100.87	$200.00	$300.87	-50.44%
PURCHASE	E 100-41570-207 Computer Supplies	$1,590.00	$3,731.63	$8,000.00	$4,268.37	46.65%
PURCHASE	E 100-41570-220 Repair/Maint Supply (G	$176.05	$1,896.48	$4,000.00	$2,103.52	47.41%
PURCHASE	E 100-41570-322 Postage	$0.00	$415.85	$2,500.00	$2,084.15	16.63%
PURCHASE	E 100-41570-570 Office Equip and Furnis	$0.00	$1,122.00	$6,000.00	$4,878.00	18.70%
Dept 41570 Purchasing		$1,984.38	$8,983.12	$24,200.00	$15,216.88	37.12%
Dept 41600 Computer						
COMPUTER	E 100-41600-310 Other Professional Serv	$104.00	$5,689.80	$8,500.00	$2,810.20	66.94%
Dept 41600 Computer		$104.00	$5,689.80	$8,500.00	$2,810.20	66.94%
Dept 41610 City Attorney						
CITYATNY	E 100-41610-304 Legal Fees	$808.82	$5,471.99	$23,500.00	$18,028.01	23.29%
Dept 41610 City Attorney		$808.82	$5,471.99	$23,500.00	$18,028.01	23.29%
Dept 41910 Planning and Zoning						
PLANZONG	E 100-41910-310 Other Professional Serv	$5,606.50	$10,972.50	$25,000.00	$14,027.50	43.89%
Dept 41910 Planning and Zoning		$5,606.50	$10,972.50	$25,000.00	$14,027.50	43.89%
Dept 41940 General Govt Buildings/Plant						
GOVTBLDG	E 100-41940-210 Operating Supplies (GE	$0.00	$0.00	$1,500.00	$1,500.00	0.00%
GOVTBLDG	E 100-41940-220 Repair/Maint Supply (G	$461.37	$1,505.77	$7,000.00	$5,494.23	21.51%
GOVTBLDG	E 100-41940-306 Dues & Subscriptions	$0.00	$620.00	$250.00	-$370.00	248.00%
GOVTBLDG	E 100-41940-310 Other Professional Serv	$46.90	$3,089.96	$9,000.00	$5,910.04	34.33%
GOVTBLDG	E 100-41940-321 Telephone	$670.30	$3,518.48	$4,200.00	$681.52	83.77%
GOVTBLDG	E 100-41940-325 Taxes	$0.00	$262.00	$300.00	$38.00	87.33%
GOVTBLDG	E 100-41940-381 Electric Utilities	$1,274.05	$5,243.27	$14,000.00	$8,756.73	37.45%
GOVTBLDG	E 100-41940-383 Gas Utilities	$141.85	$6,452.00	$8,000.00	$1,548.00	80.65%
GOVTBLDG	E 100-41940-384 Refuse/Garbage Dispos	$240.58	$1,402.16	$3,500.00	$2,097.84	40.06%
GOVTBLDG	E 100-41940-415 Other Equipment Renta	$0.00	$0.00	$500.00	$500.00	0.00%
GOVTBLDG	E 100-41940-520 Buildings and Structure	$0.00	$471.15	$4,500.00	$4,028.85	10.47%
GOVTBLDG	E 100-41940-560 Furniture and Fixtures	$1,450.00	$1,450.00	$2,500.00	$1,050.00	58.00%
GOVTBLDG	E 100-41940-580 Other Equipment	$0.00	$0.00	$500.00	$500.00	0.00%
Dept 41940 General Govt Buildings/Plant		$4,285.05	$24,014.79	$55,750.00	$31,735.21	43.08%
Dept 41950 Engineer						
ENGINEER	E 100-41950-303 Engineering Fees	$0.00	$0.00	$25,000.00	$25,000.00	0.00%
Dept 41950 Engineer		$0.00	$0.00	$25,000.00	$25,000.00	0.00%

CITY OF HANOVER
Expenditure Budget Report - General Fund

Dept Abbrev	Account Descr	June 2018 Amt	2018 YTD Amt	2018 YTD Budget	2018 YTD Balance	%YTD Budget
Dept 41960 Insurance						
INSURANCE	E 100-41960-150 Worker s Comp (GENE	$7,867.02	$7,867.02	$9,500.00	$1,632.98	82.81%
INSURANCE	E 100-41960-152 Worker s Comp Benefit	$0.00	$0.00	$0.00	$0.00	0.00%
INSURANCE	E 100-41960-361 General Liability Ins	$13,521.98	$13,521.98	$22,000.00	$8,478.02	61.46%
Dept 41960 Insurance		$21,389.00	$21,389.00	$31,500.00	$10,111.00	67.90%
Dept 41970 Legal Publications						
LEGALPUB	E 100-41970-341 Employment	$0.00	$0.00	$300.00	$300.00	0.00%
LEGALPUB	E 100-41970-343 Other Advertising	$0.00	$0.00	$50.00	$50.00	0.00%
LEGALPUB	E 100-41970-351 Legal Notices Publishin	$0.00	$140.78	$2,000.00	$1,859.22	7.04%
LEGALPUB	E 100-41970-354 Recording Fees	$0.00	$165.95	$500.00	$334.05	33.19%
Dept 41970 Legal Publications		$0.00	$306.73	$2,850.00	$2,543.27	10.76%
Dept 42101 Hennepin County Sheriff						
HCSHERIFF	E 100-42101-310 Other Professional Serv	$0.00	$20,273.93	$81,096.00	$60,822.07	25.00%
Dept 42101 Hennepin County Sheriff		$0.00	$20,273.93	$81,096.00	$60,822.07	25.00%
Dept 42102 Wright County Sheriff						
WCSHERIFF	E 100-42102-310 Other Professional Serv	$10,566.44	$54,366.44	$105,120.00	$50,753.56	51.72%
Dept 42102 Wright County Sheriff		$10,566.44	$54,366.44	$105,120.00	$50,753.56	51.72%
Dept 42210 Fire Dept Administration						
FIREADMIN	E 100-42210-103 Part-Time Employees	$0.00	-$1,628.62	$59,000.00	$60,628.62	-2.76%
FIREADMIN	E 100-42210-122 FICA	$0.00	$1,319.96	$3,658.00	$2,338.04	36.08%
FIREADMIN	E 100-42210-123 Medicare	$0.00	$308.69	$856.00	$547.31	36.06%
FIREADMIN	E 100-42210-142 Unemployment Benefit	$0.00	$167.88	$0.00	-$167.88	0.00%
FIREADMIN	E 100-42210-150 Worker s Comp (GENE	$5,040.18	$5,040.18	$8,500.00	$3,459.82	59.30%
FIREADMIN	E 100-42210-200 Office Supplies (GENER	$0.00	$0.00	$350.00	$350.00	0.00%
FIREADMIN	E 100-42210-305 Medical and Dental Fee	$674.00	$1,249.00	$4,000.00	$2,751.00	31.23%
FIREADMIN	E 100-42210-306 Dues & Subscriptions	$0.00	$100.00	$1,000.00	$900.00	10.00%
FIREADMIN	E 100-42210-361 General Liability Ins	$2,003.82	$2,003.82	$5,000.00	$2,996.18	40.08%
Dept 42210 Fire Dept Administration		$7,718.00	$8,560.91	$82,364.00	$73,803.09	10.39%
Dept 42220 Fire Dept Equipment						
FIREEQUIP	E 100-42220-221 Equipment Parts	$0.00	$3,363.03	$15,500.00	$12,136.97	21.70%
FIREEQUIP	E 100-42220-228 Medical Supplies	$252.86	$841.83	$1,500.00	$658.17	56.12%
FIREEQUIP	E 100-42220-240 Small Tools and Minor	$205.00	$239.07	$850.00	$610.93	28.13%
FIREEQUIP	E 100-42220-260 Uniforms	$1,365.00	$3,055.92	$28,500.00	$25,444.08	10.72%
FIREEQUIP	E 100-42220-580 Other Equipment	$1,583.74	$1,916.37	$5,000.00	$3,083.63	38.33%
Dept 42220 Fire Dept Equipment		$3,406.60	$9,416.22	$51,350.00	$41,933.78	18.34%
Dept 42240 Fire Dept Training						
FIRETRNG	E 100-42240-208 Training and Instructio	$0.00	$974.00	$12,500.00	$11,526.00	7.79%
FIRETRNG	E 100-42240-310 Other Professional Serv	$765.98	$1,585.46	$3,210.00	$1,624.54	49.39%
FIRETRNG	E 100-42240-331 Travel Expenses	$0.00	$1,397.06	$1,500.00	$102.94	93.14%
Dept 42240 Fire Dept Training		$765.98	$3,956.52	$17,210.00	$13,253.48	22.99%
Dept 42260 Fire Vehicles						
FIREVEH	E 100-42260-212 Motor Fuels	$469.40	$1,338.48	$4,500.00	$3,161.52	29.74%
FIREVEH	E 100-42260-220 Repair/Maint Supply (G	$3.96	$892.73	$9,000.00	$8,107.27	9.92%
FIREVEH	E 100-42260-240 Small Tools and Minor	$0.00	$147.04	$2,000.00	$1,852.96	7.35%
FIREVEH	E 100-42260-323 Radio Units	$365.80	$3,673.05	$7,805.00	$4,131.95	47.06%
Dept 42260 Fire Vehicles		$839.16	$6,051.30	$23,305.00	$17,253.70	25.97%
Dept 42280 Fire Stations and Bldgs						
FIREBLDG	E 100-42280-215 Shop Supplies	$0.00	$113.31	$1,650.00	$1,536.69	6.87%
FIREBLDG	E 100-42280-220 Repair/Maint Supply (G	$19.00	$1,832.42	$7,500.00	$5,667.58	24.43%

Dept Abbrev	Account Descr	June 2018 Amt	2018 YTD Amt	2018 YTD Budget	2018 YTD Balance	%YTD Budget
FIREBLDG	E 100-42280-321 Telephone	$139.88	$464.13	$1,000.00	$535.87	46.41%
FIREBLDG	E 100-42280-325 Taxes	$0.00	$0.00	$175.00	$175.00	0.00%
FIREBLDG	E 100-42280-381 Electric Utilities	$257.19	$1,180.53	$4,500.00	$3,319.47	26.23%
FIREBLDG	E 100-42280-383 Gas Utilities	$26.66	$2,004.67	$3,000.00	$995.33	66.82%
FIREBLDG	E 100-42280-520 Buildings and Structure	$0.00	$932.35	$0.00	-$932.35	0.00%
Dept 42280 Fire Stations and Bldgs		$442.73	$6,527.41	$17,825.00	$11,297.59	36.62%
Dept 42290 Fire Relief Association						
FIRERELIEF	E 100-42290-124 Fire Pension Contributi	$0.00	$0.00	$39,000.00	$39,000.00	0.00%
FIRERELIEF	E 100-42290-125 Other Retirement Contr	$0.00	$0.00	$12,011.00	$12,011.00	0.00%
FIRERELIEF	E 100-42290-301 Auditing and Acctg Ser	$0.00	$0.00	$6,500.00	$6,500.00	0.00%
Dept 42290 Fire Relief Association		$0.00	$0.00	$57,511.00	$57,511.00	0.00%
Dept 42401 Building Inspection Admin						
INSPADMN	E 100-42401-310 Other Professional Serv	$1,209.40	$19,144.07	$50,000.00	$30,855.93	38.29%
Dept 42401 Building Inspection Admin		$1,209.40	$19,144.07	$50,000.00	$30,855.93	38.29%
Dept 42700 Animal Control						
ANIMCTRL	E 100-42700-310 Other Professional Serv	$311.00	$561.00	$500.00	-$61.00	112.20%
Dept 42700 Animal Control		$311.00	$561.00	$500.00	-$61.00	112.20%
Dept 42800 Cemetery						
CEMETERY	E 100-42800-310 Other Professional Serv	$0.00	$0.00	$0.00	$0.00	0.00%
Dept 42800 Cemetery		$0.00	$0.00	$0.00	$0.00	0.00%
Dept 43000 Public Works (GENERAL)						
PUBWRKS	E 100-43000-101 Full-Time Employees R	$11,638.63	$67,049.17	$131,192.00	$64,142.83	51.11%
PUBWRKS	E 100-43000-102 Full-Time Employees O	$0.00	$583.44	$2,000.00	$1,416.56	29.17%
PUBWRKS	E 100-43000-103 Part-Time Employees	$2,340.00	$4,380.00	$13,740.00	$9,360.00	31.88%
PUBWRKS	E 100-43000-121 PERA	$872.89	$5,330.01	$11,714.00	$6,383.99	45.50%
PUBWRKS	E 100-43000-122 FICA	$836.45	$4,469.54	$10,536.00	$6,066.46	42.42%
PUBWRKS	E 100-43000-123 Medicare	$195.62	$1,045.31	$2,464.00	$1,418.69	42.42%
PUBWRKS	E 100-43000-134 Employer Paid Life	$205.47	$1,119.80	$2,100.00	$980.20	53.32%
PUBWRKS	E 100-43000-142 Unemployment Benefit	$0.00	$5,200.44	$250.00	-$4,950.44	080.18%
PUBWRKS	E 100-43000-151 Med/Dental Insurance	$2,734.12	$15,444.01	$30,000.00	$14,555.99	51.48%
PUBWRKS	E 100-43000-208 Training and Instructio	$338.99	$2,162.99	$2,500.00	$337.01	86.52%
PUBWRKS	E 100-43000-212 Motor Fuels	$729.23	$6,739.87	$7,000.00	$260.13	96.28%
PUBWRKS	E 100-43000-215 Shop Supplies	$121.77	$5,792.53	$5,500.00	-$292.53	105.32%
PUBWRKS	E 100-43000-220 Repair/Maint Supply (G	$539.94	$6,854.08	$9,000.00	$2,145.92	76.16%
PUBWRKS	E 100-43000-226 Sign Repair Materials	$0.00	$0.00	$1,500.00	$1,500.00	0.00%
PUBWRKS	E 100-43000-240 Small Tools and Minor	$312.86	$1,276.44	$5,000.00	$3,723.56	25.53%
PUBWRKS	E 100-43000-260 Uniforms	$0.00	$584.76	$3,000.00	$2,415.24	19.49%
PUBWRKS	E 100-43000-310 Other Professional Serv	$0.00	$1,250.00	$17,000.00	$15,750.00	7.35%
PUBWRKS	E 100-43000-321 Telephone	$328.57	$1,543.63	$2,800.00	$1,256.37	55.13%
PUBWRKS	E 100-43000-325 Taxes	$0.00	$118.00	$200.00	$82.00	59.00%
Dept 43000 Public Works (GENERAL)		$21,194.54	$130,944.02	$257,496.00	$126,551.98	50.85%
Dept 43121 Paved Streets						
PAVSTRTS	E 100-43121-224 Street Maint Materials	$1,811.87	$1,811.87	$100,000.00	$98,188.13	1.81%
Dept 43121 Paved Streets		$1,811.87	$1,811.87	$100,000.00	$98,188.13	1.81%
Dept 43122 Unpaved Streets						
UNPAVSTS	E 100-43122-224 Street Maint Materials	$0.00	$0.00	$15,000.00	$15,000.00	0.00%
Dept 43122 Unpaved Streets		$0.00	$0.00	$15,000.00	$15,000.00	0.00%
Dept 43125 Ice & Snow Removal						
SNOWREMO	E 100-43125-224 Street Maint Materials	$0.00	$6,624.48	$15,000.00	$8,375.52	44.16%

CITY OF HANOVER
Expenditure Budget Report - General Fund

Dept Abbrev	Account Descr	June 2018 Amt	2018 YTD Amt	2018 YTD Budget	2018 YTD Balance	%YTD Budget
Dept 43125 Ice & Snow Removal		$0.00	$6,624.48	$15,000.00	$8,375.52	44.16%
Dept 43160 Street Lighting						
STLGHTG	E 100-43160-381 Electric Utilities	$1,921.96	$9,624.18	$25,000.00	$15,375.82	38.50%
Dept 43160 Street Lighting		$1,921.96	$9,624.18	$25,000.00	$15,375.82	38.50%
Dept 43240 Waste (refuse) Disposal						
REFDISPO	E 100-43240-384 Refuse/Garbage Dispos	$1,935.00	$1,935.00	$0.00	-$1,935.00	0.00%
Dept 43240 Waste (refuse) Disposal		$1,935.00	$1,935.00	$0.00	-$1,935.00	0.00%
Dept 43245 Recycling: Refuse						
RECYCLING	E 100-43245-384 Refuse/Garbage Dispos	$3,366.08	$16,817.84	$38,500.00	$21,682.16	43.68%
Dept 43245 Recycling: Refuse		$3,366.08	$16,817.84	$38,500.00	$21,682.16	43.68%
Dept 45186 Senior Center						
SRCENTER	E 100-45186-437 Other Miscellaneous	$0.00	$1,887.00	$8,700.00	$6,813.00	21.69%
Dept 45186 Senior Center		$0.00	$1,887.00	$8,700.00	$6,813.00	21.69%
Dept 45200 Parks (GENERAL)						
PARKS	E 100-45200-212 Motor Fuels	$42.94	$42.94	$2,000.00	$1,957.06	2.15%
PARKS	E 100-45200-220 Repair/Maint Supply (G	$1,196.20	$1,257.25	$5,000.00	$3,742.75	25.15%
PARKS	E 100-45200-225 Landscaping Materials	$119.94	$231.18	$8,000.00	$7,768.82	2.89%
PARKS	E 100-45200-310 Other Professional Serv	$0.00	$6,800.00	$6,800.00	$0.00	100.00%
PARKS	E 100-45200-381 Electric Utilities	$309.40	$875.59	$2,200.00	$1,324.41	39.80%
PARKS	E 100-45200-400 Repairs & Maint Cont (	$0.00	$0.00	$1,500.00	$1,500.00	0.00%
PARKS	E 100-45200-440 Programs	$325.00	$2,467.31	$2,200.00	-$267.31	112.15%
PARKS	E 100-45200-580 Other Equipment	$408.75	$408.75	$8,000.00	$7,591.25	5.11%
Dept 45200 Parks (GENERAL)		$2,402.23	$12,083.02	$35,700.00	$23,616.98	33.85%
Dept 45500 Libraries (GENERAL)						
LIBRARY	E 100-45500-437 Other Miscellaneous	$0.00	$4,188.19	$11,500.00	$7,311.81	36.42%
Dept 45500 Libraries (GENERAL)		$0.00	$4,188.19	$11,500.00	$7,311.81	36.42%
Dept 48205 Damage Deposit Refunds						
DMGDEPRF	E 100-48205-810 Refunds & Reimbursem	$0.00	$0.00	$0.00	$0.00	0.00%
Dept 48205 Damage Deposit Refunds		$0.00	$0.00	$0.00	$0.00	0.00%
Dept 49360 Transfers Out						
TRNSFERS	E 100-49360-700 Transfers (GENERAL)	$0.00	$0.00	$0.00	$0.00	0.00%
Dept 49360 Transfers Out		$0.00	$0.00	$0.00	$0.00	0.00%
Dept 49800 Transit (GENERAL)						
TRANSIT	E 100-49800-310 Other Professional Serv	$488.63	$488.63	$5,000.00	$4,511.37	9.77%
Dept 49800 Transit (GENERAL)		$488.63	$488.63	$5,000.00	$4,511.37	9.77%
Fund 100 GENERAL FUND		$129,950.33	$535,993.05	$1,528,599.00	$992,605.95	35.06%

CITY OF HANOVER
Expenditure Budget Report - General Fund

Dept Abbrev	Account Descr	June 2018 Amt	2018 YTD Amt	2018 YTD Budget	2018 YTD Balance	%YTD Budget
		$129,950.33	$535,993.05	$1,528,599.00	$992,605.95	35.06%

CITY OF HANOVER
COUNTIES OF WRIGHT AND HENNEPIN
STATE OF MINNESOTA

A regular meeting of the City Council of the City of Hanover, Minnesota, was called to order by Mayor Kauffman at 6:00 p.m. in the Council Chambers of the City Hall, in the City of Hanover, Minnesota, on the 19th day of June, 2018.

The following Council Members were present:

The following Council Members were absent:

A motion to adopt the following resolution was made by ____ and seconded by ____.

RESOLUTION NO 06-19-18-65

APPOINTING 2018 ABSENTEE BALLOT BOARD

NOW THEREFORE, BE IT RESOLVED, that the City Council of the City of Hanover, Minnesota hereby appoints staff members Brian Hagen and Jackie Heinz as Absentee Ballot Board Judges for the 2018 Primary and General Elections.

Council members voting in favor:

Opposed or abstained:

Adopted by the city Council this 19th day of June, 2018.

APPROVED BY:

_____
Chris Kauffman, Mayor

ATTEST:

_____
Brian Hagen, City Administrator

Collaborative Planning, LLC

Memorandum

Date: June 19, 2018

To: Honorable Mayor and Council

From: Cindy Nash, City Planner

RE: Crow River Heights West Future Additions EAW – Negative Declaration

---

An Environmental Assessment Worksheet (EAW) is a process that lays out basic facts about a project to determine if an Environmental Impact Statement (EIS) is required for the proposed project. It consists of a form that provides information needed to determine if the project will have the potential for significant environmental impacts. In addition to the legal purpose of the EAW, it also provides permit information, informs the public about the project, and helps identify ways to protect the environment.

Projects that meet or exceed certain thresholds in Minnesota Rules 4410.4300 are required to complete an EAW. The minimum threshold for a residential development in this area is 100 unattached or 150 attached units. A project that does not meet the minimum threshold can still go through the EAW process if the governmental unit with approval authority orders a discretionary EAW.

A copy of the EAW is available on the City website. Public comment was accepted through May 30, 2018. The Planning Commission received additional public comment at their meeting on May 23, 2018.

After a review of the comments, a Record of Decision and Findings of Fact was prepared for the Council's consideration. This includes an analysis and response to the comments received on the EAW. The City Council must make a determination on whether an Environmental Impact Statement (EIS) will be required for this project. If one will not be required, a negative declaration on the need for an EIS is made which then completes the environmental review for this project. If a positive declaration is made, then an EIS would need to be prepared.

Staff Recommendation

Based on the EAW document, the factors to consider under Minnesota Rules, the comments received, and the ability to address known environmental impacts through existing permitting procedures, staff is recommending that the Council issue a negative declaration on the need for an Environmental Impact Statement.

Documents:

1. Crow River Heights West Future Additions EAW
2. Record of Decision and Findings of Fact
3. Resolution issuing a negative declaration

ENVIRONMENTAL ASSESSMENT WORKSHEET

This Environmental Assessment Worksheet (EAW) form and EAW Guidelines are available at the Environmental Quality Board's website at:
http://www.eqb.state.mn.us/EnvRevGuidanceDocuments.htm. The EAW form provides information about a project that may have the potential for significant environmental effects. The EAW Guidelines provide additional detail and resources for completing the EAW form.
Cumulative potential effects can either be addressed under each applicable EAW Item, or can be addresses collectively under EAW Item 19.
Note to reviewers: Comments must be submitted to the RGU during the 30-day comment period following notice of the EAW in the *EQB Monitor*. Comments should address the accuracy and completeness of information, potential impacts that warrant further investigation and the need for an EIS.

1. **Project title: CROW RIVER HEIGHTS WEST FUTURE ADDITIONS**

2. **Proposer: Backes Development, LLC**
   Contact person: Dennis (Buck) Backes
   Title: Developer
   Address: 11413 Ashbury Circle N.
   City, State, Zip: Champlin, MN 55316
   Phone: 612-369-7750
   Fax: 763-566-1525
   Email: dcbackes@gmail.com

3. **RGU: City of Hanover**
   Contact person: Cindy Nash
   Title: City Planner
   Address: 11250 5th Street NE
   City, State, Zip: Hanover, MN 55341
   Phone: 763-473-0569
   Fax: 763-497-1873
   Email: cnash@collaborative-planning.com

4. **Reason for EAW Preparation:** (check one)

Required:	Discretionary:
☐ EIS Scoping	☐ Citizen petition
X☐ Mandatory EAW	☐ RGU discretion
	☐ Proposer initiated

If EAW or EIS is mandatory give EQB rule category subpart number(s) and name(s):
4410.4300 Subpart 19B, Residential Development

5. **Project Location:**
   County: Wright
   City/Township: Hanover
   PLS Location (¼, ¼, Section, Township, Range): NE ¼ Section 34, TWP 120N, R 24W
   Watershed (81 major watershed scale): South Fork Crow River
   GPS Coordinates: 45.163671, -93.689999
   Tax Parcel Number: 108500341102

   At a minimum attach each of the following to the EAW:
   - County map showing the general location of the project;
   - U.S. Geological Survey 7.5 minute, 1:24,000 scale map indicating project boundaries (photocopy acceptable); and
   - Site plans showing all significant project and natural features. (**Attachments 1-3**)

6. Project Description:

a. Provide the brief project summary to be published in the *EQB Monitor*, (approximately 50 words).

The development of 159 single family detached homes on 72 acres in the City of Hanover. The project will be developed as a Planned Unit Development (PUD) allowing an average lot size of 11,968 square feet. The proposed lots are part of a revived development started in 1999.

b. Give a complete description of the proposed project and related new construction, including infrastructure needs. If the project is an expansion include a description of the existing facility. Emphasize: 1) construction, operation methods and features that will cause physical manipulation of the environment or will produce wastes, 2) modifications to existing equipment or industrial processes, 3) significant demolition, removal or remodeling of existing structures, and 4) timing and duration of construction activities.

The development of 159 single family detached homes on 72 acres in the City of Hanover. The Project is the revived development of a 274-residential single-family subdivision. In September of 1999 the City of Hanover submitted an EAW for West Crow River Heights Residential Development. In 1999, a negative declaration for an EIS was approved by the City. In 2000 a preliminary plat was approved and the developer completed 106 of the lots and graded most of the roads for the development before stopping construction in 2007. In 2018, a new developer (Backes Development LLC) is completing the project with some changes to the previously approved plans. The plan is altered due to new wetland setback and buffer ordinances and with the replacement of 77 previously approved detached town-homes with single family lots. The project will be developed as a Planned Unit Development (PUD) allowing an average lot size of 11,968 square feet. Several small wetland basins will be filled and mitigated by using on-site wetland replacement. Due to the lapse of time from the initial EAW the city ordered a new EAW for the uncompleted portion of the development, with the exception of 30 lots which were allowed to be developed in 2017. Disturbance of the site will be for grading the roads, installation of municipal water and sanitary sewer infrastructure, installation of stormwater infrastructure, and completion of pads for building sites. The project is anticipated to be developed in phases consisting of approximately 30 lots per phase for a total of 5 to 6 phases. With the current demand for single family homes, each phase could begin every year for a completion date of within 5 to 6 years.

c. Project magnitude:

Total Project Acreage	71.98 acres
Linear project length	NA
Number and type of residential units	159 Single Family
Commercial building area (in square feet)	NA
Industrial building area (in square feet)	NA
Institutional building area (in square feet)	NA
Other uses – specify (in square feet)	NA
Structure height(s)	NA

d. Explain the project purpose; if the project will be carried out by a governmental unit, explain the need for the project and identify its beneficiaries.

The project purpose is to complete a single-family subdivision for which construction had been previously commenced and then stopped. The project will meet the housing demands for the City of Hanover and the surrounding area.

e. Are future stages of this development including development on any other property planned or likely to happen? ☐ Yes X No
If yes, briefly describe future stages, relationship to present project, timeline and plans for environmental review.

f. Is this project a subsequent stage of an earlier project? X Yes ☐ No
If yes, briefly describe the past development, timeline and any past environmental review.

In 1999, a negative declaration for an EIS was approved by the City of Hanover upon their review of the 1999 EAW for the West Crow River Heights Residential Development. The City of Hanover approved the original West Crow River Heights preliminary plat of 274 single family lots in 2000. In 2007 the developer had constructed 106 of the lots and graded most of the roads within the project area prior to stopping construction due to the slow-down in housing sales. In 2017, Backes Development, LLC proposed to complete the remaining lots. The city approved the development of 30 lots in 2017 with the condition of a new EAW submittal for the remaining 159 lots.

7. **Cover types:** Estimate the acreage of the site with each of the following cover types before and after development:

	Before	**After**		**Before**	**After**
Wetlands	6.1	5.6	Lawn/landscaping	0	45.4
Deep water/streams	0	0	Impervious surface	0	16.6
Wooded/forest	9.1	0.5	Stormwater Pond	1.2	3.3
Brush/Grassland	13.9	0.6	Previously Graded Area	29.6	0
Cropland	12.1	0			
			TOTAL	**72.0**	**72.0**

8. **Permits and approvals required:** List all known local, state and federal permits, approvals, certifications and financial assistance for the project. Include modifications of any existing permits, governmental review of plans and all direct and indirect forms of public financial assistance including bond guarantees, Tax Increment Financing and infrastructure. *All of these final decisions are prohibited until all appropriate environmental review has been completed. See Minnesota Rules, Chapter 4410.3100.*

Unit of government	Type of application	Status
US Corps of Engineers	Section 404 Wetland Impact	Obtain if needed
DNR Waters	Dewatering Permit	Obtain if needed
MPCA	NPDES Permit	To be obtained
MPCA	Sanitary Sewer Permit	To be obtained
MDH	Water Extension Permit	To be obtained
Wright SWCD-LGU	WCA Permit	To be obtained

City of Hanover	Plat Approval	To be obtained
City of Hanover	Rezoning	To be obtained
City of Hanover	Planned Unit Development	To be obtained
City of Hanover	Building Permit	To be obtained

Cumulative potential effects may be considered and addressed in response to individual EAW Item Nos. 9-18, or the RGU can address all cumulative potential effects in response to EAW Item No. 19. If addressing cumulative effect under individual items, make sure to include information requested in EAW Item No. 19

9. Land use:

a. Describe:

i. Existing land use of the site as well as areas adjacent to and near the site, including parks, trails, prime or unique farmlands.

The majority of the site has been farmed and/or grazed in the past, prior to previous grading activity. Much of the site was graded in the early 2000's, and then that grading work was abandoned. There are wetlands and forested areas within the site. Adjacent lands are:

South: single family wooded lots, the project will connect the adjacent neighborhood via Jandel Ave, NE
North: single family homes with Beebe Lake Rd NE and Lake Wilhelm beyond
East: single family homes, part of the earlier development of Crow River Heights West and Crow River Heights East
West: farmed and/or grazed fields with woods to the south and a single family residential development to the north

ii. Plans. Describe planned land use as identified in comprehensive plan (if available) and any other applicable plan for land use, water, or resources management by a local, regional, state, or federal agency.

The City adopted a Comprehensive Plan on July 15, 2008. The plan includes a future land use map (amended July 2009) identifying this area as Neighborhood Residential. The Comprehensive Plan was amended in 2017 to change the number of dwelling units allowed per acre within the Neighborhood Residential land use category to be between 2 and 4 dwelling units per net developable acre. This is the same land use designated for the previous developed portion of Crow River Heights West. The developed land to the south is identified as Rural Preservation, 2.5 acre lots. **(Attachment 4, Land Use)**

The Comprehensive Plan also includes a park map and a trail map identifying future search areas and connections near the project site. A park search area is identified to the east of the site. The Park and Trail System Map was updated as part of the 2011 Park Dedication Fee Study that removes the park search for this area but shows a future trail connection to the north and a neighborhood link to the west. **(Attachment 5, park plan)**

iii. Zoning, including special districts or overlays such as shoreland, floodplain, wild and scenic rivers, critical area, agricultural preserves, etc.

The site is zoned R-1A, Single Family Residential. The project will require the rezoning of the site for a Planned Unit Development (PUD) allowing an average lot size of 11,968 square feet. The project utilizes

the underlying R-1A zoning district in establishing development standards and to be in conformance to the previous approved lots. The minimum lot size in the R-1A is 12,000 square feet. PUD flexibility will be requested for lot area, (minimum lot size is 7,342), setbacks and length of a cul-de-sac.

The City adopted a Wetland Overlay District that provides sound management practices and mitigation as provided in the Wetland Conservation Act (WCA).

b. Discuss the project's compatibility with nearby land uses, zoning, and plans listed in Item 9a above, concentrating on implications for environmental effects.

The project is the revived construction of a previously approved and mostly developed subdivision. It is generally in conformance with the City's zoning and comprehensive plan. The proposed project incorporates the new wetland ordinance standards providing improved protection of wetlands than what was previously allowed.

c. Identify measures incorporated into the proposed project to mitigate any potential incompatibility as discussed in Item 9b above.

The project continues to conform to the city's comprehensive plan and is compatible to the city's underlying R-1A district. It continues to follow the same development pattern that was used in the earlier stages of the development. The project has removed the previously approved 77 detached townhomes and converted them to single-family lots, which are more in line with the surrounding homes. Since the original development was approved in 2000 the city has adopted new wetland protection and buffer ordinances. The new ordinance requires a 30-foot vegetated buffer from the edge of wetlands which is incorporated into the proposed plans.

10. Geology, soils and topography/land forms:

a. Geology - Describe the geology underlying the project area and identify and map any susceptible geologic features such as sinkholes, shallow limestone formations, unconfined/shallow aquifers, or karst conditions. Discuss any limitations of these features for the project and any effects the project could have on these features. Identify any project designs or mitigation measures to address effects to geologic features.

A 1999 Geotechnical Exploration was conducted by GME Consultants for the previous Crow River Heights Housing Development. The exploration consisted of 20 borings, with borings 1-6 located within this EAW project area. (**Attachment 6, 1999 Geotechnical Report**). The report notes that based on the Minnesota of Natural Resource (DNR) Atlas for this area, the predominate soil types consist of Des Moines lobe clayey glacial drift underlain by Superior lobe clay till with buried sand and gravel deposits of variable thickness. Low lying, poorly drained areas have accumulated surficial deposits of alluvial silt and organics.

The past studies noted that there are no known geologic site hazards located within the project area and that the minimum depth to bedrock is at 50 feet with the average depth at over 100 feet. (**Attachment 7, Geology Map**)

b. Soils and topography - Describe the soils on the site, giving NRCS (SCS) classifications and descriptions, including limitations of soils. Describe topography, any special site conditions relating to erosion potential, soil stability or other soils limitations, such as steep slopes, highly permeable soils. Provide estimated volume and acreage of soil excavation and/or grading. Discuss impacts from project activities (distinguish between construction and operational activities) related to soils and topography. Identify measures during and after project construction

to address soil limitations including stabilization, soil corrections or other measures. Erosion/sedimentation control related to stormwater runoff should be addressed in response to Item 11.b.ii.

The NRCS classifications for the project site consists of 5 soil types which are predominately Angus-Cordova and Angus -LeSueur soils. The soils include: (**Attachment 8, NRCS map**)

Glencoe clay loam, 0-1 percent slopes	(Map Unit Symbol 114)
Hamel-Glencoe complex, 0-2 percent slopes	(Map Unit Symbol 740)
Angus-Cordova complex, 0-5 percent slopes	(Map Unit Symbol 1094B)
Cordova loam, 0-2 percent slopes	(Map Unit Symbol 1156)
Angus-LeSueur complex, 1-5 percent slope	(Map Unit Symbol 1901B)

Based on the 6 borings from the 1999 Geotechnical exploration study within the EAW project area the borings logs noted mostly Brown and Gray Silty Sandy Clays. The borings went to a depth of 15 feet. Groundwater was encountered in two of the borings (1 & 4). Piezometers were installed in the borings and they were dry to elevations 931 to 970.6 feet. However, the piezometer reading in boring 1 noted groundwater at an elevation of 976.7 feet. This was determined to be perched water moving laterally through the site.

The site has rolling hills and generally slopes from west to east with scattered wetlands. The western elevation is at or around 992 feet sloping to 960 feet on the east. Portions of the site had been previously graded for the construction of roads that would serve this project and connect to adjoining roads. The topography of the site in relation to the proposed development does not appear to create any limitations to the project. The geotechnical exploration opinion was that houses may be supported on conventional spread footings. Standard erosion control measures will be used in accordance with the MPCA's best management practices incorporated in the NPDES permit that will be obtained.

The site grading is limited to only the portions of the site which have not been previously graded. Therefore, site grading will occur on approximately 42 acres with an estimated quantity of 250,000 cubic yards of soil excavation. The construction will be phased over a period of 5-6 years. Grading will be accomplished with conventional earth moving equipment such as scrapers, dozers, backhoes and compactors. The grading will be vegetated within the required time frame or sooner to minimize the risk of erosion. All graded surfaces that are constructed on 3:1 slopes will be required to have erosion control blankets placed to stabilize the slopes. All grading and erosion control measures will be completed in accordance with the requirements of the NPDES permit.

NOTE: For silica sand projects, the EAW must include a hydrogeologic investigation assessing the potential groundwater and surface water effects and geologic conditions that could create an increased risk of potentially significant effects on groundwater and surface water. Descriptions of water resources and potential effects from the project in EAW Item 11 must be consistent with the geology, soils and topography/land forms and potential effects described in EAW Item 10.

11. Water resources:

a. Describe surface water and groundwater features on or near the site in a.i. and a.ii. below.
   i. Surface water - lakes, streams, wetlands, intermittent channels, and county/judicial ditches. Include any special designations such as public waters, trout stream/lake, wildlife lakes, migratory waterfowl feeding/resting lake, and outstanding resource value water. Include water quality impairments or special designations listed on the current MPCA 303d Impaired

Waters List that are within 1 mile of the project. Include DNR Public Waters Inventory number(s), if any.

There are no protected DNR public waters within the site. Lake Wilhelm (DNR # 86-20P) is located 250 feet north of the site across County Road 34 (Beebe Lake Rd). A Crow River backwater basin is located 3,000 feet southeast of the site and identified by the DNR Public Water Inventory as Unnamed (86-24W). The National Hydrography Dataset showed two smaller Lake/Pond water features to the southeast and west of the site. (**Attachment 9, Water Resources Map**)

In April, 1999 a wetland delineation was conducted by Kjolhaug Environmental Services for the original project and was subsequently re-approved in October, 2005. On May 3, 2017 the wetlands were re-delineated by Kjolhaug Environmental Services for the subject site and 12 wetlands were delineated. The 12 wetlands are larger in size than the same wetlands delineated in 1999. The cause of the increased size was due to incidental impacts caused by the site preparation of the larger development. (**Attachment 10, Wetland Delineation & No-Loss Report**)

ii. Groundwater – aquifers, springs, seeps. Include: 1) depth to groundwater; 2) if project is within a MDH wellhead protection area; 3) identification of any onsite and/or nearby wells, including unique numbers and well logs if available. If there are no wells known on site or nearby, explain the methodology used to determine this.

The project site lies above the Franconia-Ironton-Galesville Aquifer. The Franconia is not a significant source of water regionally, but the Ironton-Galesville (sandstone) may be an important source outside of the boundary of the Prairie du Chein-Jordan aquafer as noted in the Designation of Principal Water Supply Aquifers in Minnesota, US Geological Survey 1981. (**Attachment 11, Aquifers Map**)

Per the 1999 EAW it was noted that the minimum depth to groundwater is 0-3 feet with an average depth of 20-40 feet throughout the larger development site. As noted in the 1999 Geotechnical Exploration they encountered groundwater in six of the 20 borings, at depth of 2-14 feet. Piezometers were installed in the borings and they were dry to elevations 931 to 970.6 feet. However, the piezometer reading in boring 1 noted groundwater at an elevation of 976.7 feet. This was determined to be perched water moving laterally through the site.

The site is not within a MDH wellhead protection area and there are no known wells within the project site. Wells were identified in 1999 on the eastern (developed) side of the site and were capped as part of the development.

b. Describe effects from project activities on water resources and measures to minimize or mitigate the effects in Item b.i. through Item b.iv. below.

i. Wastewater - For each of the following, describe the sources, quantities and composition of all sanitary, municipal/domestic and industrial wastewater produced or treated at the site.

1) If the wastewater discharge is to a publicly owned treatment facility, identify any pretreatment measures and the ability of the facility to handle the added water and waste loadings, including any effects on, or required expansion of, municipal wastewater infrastructure.

Only normal domestic sewage will be generated by this residential project. The sewage loading is estimated at 0.053 MGD for the ultimate development. The sewage from the development will be directed to the St. Michael Wastewater Treatment Facility. The plant has a current capacity of 2.5 MGD with a current flow of 0.971 MGD. The sewage treatment plant will have capacity to accept the sewage

from this project. The sewage will be collected by onsite sanitary sewer piping and will connect to existing pipe stubs adjacent to the site.

2) If the wastewater discharge is to a subsurface sewage treatment systems (SSTS), describe the system used, the design flow, and suitability of site conditions for such a system.

N/A

3) If the wastewater discharge is to surface water, identify the wastewater treatment methods and identify discharge points and proposed effluent limitations to mitigate impacts. Discuss any effects to surface or groundwater from wastewater discharges.

N/A

ii. Stormwater - Describe the quantity and quality of stormwater runoff at the site prior to and post construction. Include the routes and receiving water bodies for runoff from the site (major downstream water bodies as well as the immediate receiving waters). Discuss any environmental effects from stormwater discharges. Describe stormwater pollution prevention plans including temporary and permanent runoff controls and potential BMP site locations to manage or treat stormwater runoff. Identify specific erosion control, sedimentation control or stabilization measures to address soil limitations during and after project construction.

Since a portion of the site has been graded several stormwater ponds exist on the site. These ponds were designed to collect stormwater runoff and provide rate control and treatment. This project will utilize the existing ponds and expand them and provide additional ponds to provide additional treatment as required by the NPDES permit.

The ponds are required to provide the following:
- Rate control so that the runoff rates do not exceed 0.1 cubic feet per second per acre of drainage area for the 1, 10, 100 and the 100 year-10 day snowmelt rainfall events.
- Volume control to capture the one-inch runoff volume from the new impervious surfaces and provide infiltration / filtration
- Water quality to reduce the total suspended solids (TSS) by 85% and reduce the total phosphorus (TP) load by 55%.

Stormwater runoff from the project will be directed to stormwater treatment and retention ponds on site via storm sewer and overland flow prior to discharging off-site. While the quantity of storm water generated by the project is anticipated to increase, the proposed discharge rate for the site will not exceed the existing discharge rate.

The major downstream water body is the Crow River. Since the water will be pre-treated and discharge rates will be held to pre-development rates, this project is not anticipated to negatively affect downstream water bodies. Silt fencing and seeding plus any other required erosion control measures through the NPDES permit review will be utilized on the site.

The site erosion control plan will implement several BMP's starting with minimize disturbed areas, temporary mulch, erosion control blankets and re-vegetation within 14 days of completed construction activities. Silt fence will be utilized as perimeter control and will be maintained throughout the construction and will be removed when honesties have been completed and lawns established.

iii. Water appropriation - Describe if the project proposes to appropriate surface or groundwater (including dewatering). Describe the source, quantity, duration, use and purpose of the water use and if a DNR water appropriation permit is required. Describe any well abandonment. If connecting to an existing municipal water supply, identify the wells to be used as a water source and any effects on, or required expansion of, municipal water infrastructure. Discuss environmental effects from water appropriation, including an assessment of the water resources available for appropriation. Identify any measures to avoid, minimize, or mitigate environmental effects from the water appropriation.

Soil borings had identified possible perched water in the project area. Dewatering may be necessary for construction. The contractor will obtain the required DNR permit if necessary.
The project will be served by city water service. Watermain stubs are available adjacent to the project site for water connections.

iv. Surface Waters

a) Wetlands - Describe any anticipated physical effects or alterations to wetland features such as draining, filling, permanent inundation, dredging and vegetative removal. Discuss direct and indirect environmental effects from physical modification of wetlands, including the anticipated effects that any proposed wetland alterations may have to the host watershed. Identify measures to avoid (e.g., available alternatives that were considered), minimize, or mitigate environmental effects to wetlands. Discuss whether any required compensatory wetland mitigation for unavoidable wetland impacts will occur in the same minor or major watershed, and identify those probable locations.

The wetlands within the project area are mostly Type 1 small isolated basins with a couple of large basin along the eastern side and the northwest corner of the project area. The plan was designed to avoid wetlands where possible and preserve them throughout the site. The larger basins were fully preserved. Other basins will be fully or partially impacted to provide the necessary grading for the proposed road connectivity and building sites. It is anticipated that the construction impacts will require the fill and mitigation of 0.57 acres of wetland (24,901 sq ft). The impacted wetlands will be mitigated on-site.

Due to the small size and disconnect between the wetland basins there will be minimal impact to the host watershed. The smaller basins would provide little benefit within a built environment. The wetlands that will remain will be protected under the city and watershed wetland ordinances and buffer standards.

The final wetland locations have been reviewed and approved by the Technical Evaluation Panel (TEP). A meeting was held at the City on March 2, 2018 to discuss the wetland impacts. Representatives from the City, Kjolhaug, the TEP and the developer were in attendance. In the proposed plans it is assumed that the small isolated wetlands would ultimately be impacted by any surrounding development and will be mitigated. Larger wetland areas were preserved. The impacted wetlands will be mitigated on-site.

b) Other surface waters- Describe any anticipated physical effects or alterations to surface water features (lakes, streams, ponds, intermittent channels, county/judicial ditches) such as draining, filling, permanent inundation, dredging, diking, stream diversion, impoundment, aquatic plant removal and riparian alteration. Discuss direct and indirect environmental effects from physical modification of water features. Identify measures to avoid, minimize, or mitigate environmental effects to surface water features, including in-water Best Management Practices that are

proposed to avoid or minimize turbidity/sedimentation while physically altering the water features. Discuss how the project will change the number or type of watercraft on any water body, including current and projected watercraft usage.

There are no other surface water features except for the above noted wetlands. The surrounding surface waters, Lake Wilhelm and the Crow River backwater basin will be protected by an erosion control plan and an NPDES permit.

12. Contamination/Hazardous Materials/Wastes:

a. Pre-project site conditions - Describe existing contamination or potential environmental hazards on or in close proximity to the project site such as soil or ground water contamination, abandoned dumps, closed landfills, existing or abandoned storage tanks, and hazardous liquid or gas pipelines. Discuss any potential environmental effects from pre-project site conditions that would be caused or exacerbated by project construction and operation. Identify measures to avoid, minimize or mitigate adverse effects from existing contamination or potential environmental hazards. Include development of a Contingency Plan or Response Action Plan.

There are no known existing contamination or potential environmental hazards on or in close proximity to the project site.

b. Project related generation/storage of solid wastes - Describe solid wastes generated/stored during construction and/or operation of the project. Indicate method of disposal. Discuss potential environmental effects from solid waste handling, storage and disposal. Identify measures to avoid, minimize or mitigate adverse effects from the generation/storage of solid waste including source reduction and recycling.

During the construction phase solid waste such as lumber, sheetrock and other typical debris will be collected and disposed of to a demolition/construction landfill. The site contains no existing buildings or other manufactured solid waste. The development of 159 homes will generate an estimated 1120 pounds of typical household solid waste per day. The City encourages recycling, which will reduce the amount of solid waste. The waste will be disposed of by contracted waste removal operations that provide home refuse collection services.

c. Project related use/storage of hazardous materials - Describe chemicals/hazardous materials used/stored during construction and/or operation of the project including method of storage. Indicate the number, location and size of any above or below ground tanks to store petroleum or other materials. Discuss potential environmental effects from accidental spill or release of hazardous materials. Identify measures to avoid, minimize or mitigate adverse effects from the use/storage of chemicals/hazardous materials including source reduction and recycling. Include development of a spill prevention plan.

During construction, hazardous materials such as fuels (small quantities stored above ground) and specific construction materials would be on site during construction and stored and handled in conformance with state and federal regulations to prevent accidental spill or release of hazardous materials. Builders and contractors are responsible for proper management of hazardous materials utilized during construction. The contractor would minimize and mitigate adverse effects from the generation and storage of hazardous wastes by recycling wastes that can be recycled, and by developing a spill prevention plan for the project.

d. Project related generation/storage of hazardous wastes - Describe hazardous wastes generated/stored during construction and/or operation of the project. Indicate method of disposal.

Discuss potential environmental effects from hazardous waste handling, storage, and disposal. Identify measures to avoid, minimize or mitigate adverse effects from the generation/storage of hazardous waste including source reduction and recycling. Upon completion of the project it is anticipated that no hazardous waste or materials will be produced.

Outside of the materials described above, the project is not anticipated to generate or require the storing, handling or disposal of hazardous wastes during construction or operation of the project.

13. Fish, wildlife, plant communities, and sensitive ecological resources (rare features):

a. Describe fish and wildlife resources as well as habitats and vegetation on or near the site.

The northerly portion of the site is used for agriculture purposes with the majority of the remaining site is undisturbed. A wooded area in the southwestern portion and sporadic wetland basins. This land provides habitat for a variety of bird, mammal, reptile and amphibian species common to the area such as deer, fox, squirrels and turkeys.

The surrounding land uses consist of a developed residential neighborhood with sodded yards to the east and residential homes on 2-acre wooded lots to the south with agricultural fields to the west. Lake Wilhelm is located north of the site across County Road 34.

b. Describe rare features such as state-listed (endangered, threatened or special concern) species, native plant communities, Minnesota County Biological Survey Sites of Biodiversity Significance, and other sensitive ecological resources on or within close proximity to the site. Provide the license agreement number (LA-____) and/or correspondence number (ERDB #,ES#) from which the data were obtained and attach the Natural Heritage letter from the DNR. Indicate if any additional habitat or species survey work has been conducted within the site and describe the results.

A Natural Heritage Data Review was conducted per the 1999 EAW review, ES# 990724. Based on that review there were 6 known occurrences of rare species or natural communities within an approximate 1-mile search area. The only specific comment received for an element that may have a potential impact by the project was regarding the Blanding turtle.

A new Natural Heritage Information System (NHIS) request was submitted for this EAW. On March 30, 2018 a response letter was received, ERDB 210880366. (**Attachment 12, 2018 NHIS letter**)

c. Discuss how the identified fish, wildlife, plant communities, rare features and ecosystems may be affected by the project. Include a discussion on introduction and spread of invasive species from the project construction and operation. Separately discuss effects to known threatened and endangered species.

Based on the DNR review they identified the Blanding turtle as a rare feature that may be adversely affected by the project by direct fatality or habitat disturbance.

A tree survey was conducted on February 5th 2018. The survey identified 771 trees consisting of 21 different specimens. The most prominent specimens are Ash, Elm and Maple trees. Many of the trees will be removed for site grading, especially for the road connection to Jandel Ave, south of the site. The development will preserve the trees along the property lines to provide a natural buffer from the adjoining lots. (**Attachment 13, Tree Survey**)

d. Identify measures that will be taken to avoid, minimize, or mitigate adverse effects to fish, wildlife, plant communities, and sensitive ecological resources.

Per the DNR letter recommendations actions will be taken to minimize disturbance of the turtles. Measures include: avoid type 2 & 3 wetlands; implement wildlife friendly erosion control methods; distribute the fact sheet and flyer to contractors for easier identification and encourage contractors and home builders to report sightings of turtles and turtle habitat.

Preserved trees will be protected during the construction period to prevent impacts to the tree and root that could cause future damage to the trees.

14. Historic properties:

Describe any historic structures, archeological sites, and/or traditional cultural properties on or in close proximity to the site. Include: 1) historic designations, 2) known artifact areas, and 3) architectural features. Attach letter received from the State Historic Preservation Office (SHPO). Discuss any anticipated effects to historic properties during project construction and operation. Identify measures that will be taken to avoid, minimize, or mitigate adverse effects to historic properties.

On January 10, 2018 an EAW database search for historic properties was requested from the State Historic Preservation Office (SHPO). On the same day we received a responding email from Jesse Kling stating that the results of the cultural resources database search found that no historic structures were identified in a search of the Minnesota Archaeological Inventory and Historic and Architectural Inventory for the search area requested. (**Attachment 14, SHPO letter**)

15. Visual:

Describe any scenic views or vistas on or near the project site. Describe any project related visual effects such as vapor plumes or glare from intense lights. Discuss the potential visual effects from the project. Identify any measures to avoid, minimize, or mitigate visual effects.

The site consists of agricultural land surrounded by single family development. Although Lake Wilhelm is 250 feet north of the project site it is across a paved road (Beebe Lake Road) and surrounded by existing homes. Scenic views of the lake will be very limited from the project site.

There are no anticipated visual effects from the project site as it will be a detached single-family project surrounded by other single-family homes. The project site is the continuous development of a larger development phased plan.

16. Air:

a. Stationary source emissions - Describe the type, sources, quantities and compositions of any emissions from stationary sources such as boilers or exhaust stacks. Include any hazardous air pollutants, criteria pollutants, and any greenhouse gases. Discuss effects to air quality including any sensitive receptors, human health or applicable regulatory criteria. Include a discussion of any methods used assess the project's effect on air quality and the results of that assessment. Identify pollution control equipment and other measures that will be taken to avoid, minimize, or mitigate adverse effects from stationary source emissions.

There will be no stationary source of air emissions.

b. Vehicle emissions - Describe the effect of the project's traffic generation on air emissions. Discuss the project's vehicle-related emissions effect on air quality. Identify measures (e.g. traffic operational improvements, diesel idling minimization plan) that will be taken to minimize or mitigate vehicle-related emissions.

Construction vehicles will create temporary exhaust emissions while grading the site. Construction activities will be conducted during daytime regulated hours and all vehicles will be to state and federal standards. The proposed project will generate an increase in carbon monoxide levels due to an increase in passenger vehicle and truck trips. The project will not require an indirect source permit. No baseline air quality monitoring or modeling is proposed and no measures to mitigate for the increase in vehicle related emissions are being considered.

c. Dust and odors - Describe sources, characteristics, duration, quantities, and intensity of dust and odors generated during project construction and operation. (Fugitive dust may be discussed under item 16a). Discuss the effect of dust and odors in the vicinity of the project including nearby sensitive receptors and quality of life. Identify measures that will be taken to minimize or mitigate the effects of dust and odors.

Construction vehicles may create dust if the construction conditions are dry. Since a portion of the road system has already been graded this will minimize the construction time for the project. The sensitive receptors in the vicinity are the surrounding single-family homes. The homes to the south are buffered by woods to help in restricting dust entering their homes. Dust control measures will be utilized per the city permits.

17. Noise

Describe sources, characteristics, duration, quantities, and intensity of noise generated during project construction and operation. Discuss the effect of noise in the vicinity of the project including 1) existing noise levels/sources in the area, 2) nearby sensitive receptors, 3) conformance to state noise standards, and 4) quality of life. Identify measures that will be taken to minimize or mitigate the effects of noise.

Construction vehicles will generate temporary increases to the existing noise levels. Construction activities will be conducted during daytime regulated hours and all vehicles will be to state and federal standards. The noise generated will be no different than previous development activities and regulated by approved permits.

18. Transportation

a. Describe traffic-related aspects of project construction and operation. Include: 1) existing and proposed additional parking spaces, 2) estimated total average daily traffic generated, 3) estimated maximum peak hour traffic generated and time of occurrence, 4) indicate source of trip generation rates used in the estimates, and 5) availability of transit and/or other alternative transportation modes.

A traffic study was prepared by Swing Traffic Solutions, LLC in February, 2018. The study, at that time, assumed a development with a total of 166 lots and is based upon the traffic generated by 166 lots. The current site plan shows 159 total lots. Swing Traffic Solutions has reviewed the study for any notable impacts from the reduction in proposed lots and determined that a revised traffic study is not necessary since the decrease in traffic volume is fairly insignificant and will only result in better traffic conditions. The following data from the traffic study is based upon a development of 166 lots.

The proposed development is occurring on undeveloped land, without existing parking. The development of the land will result in 166 single family homes with generally 2 to 3 car garages. The trip generation estimates are based on the Institute of Transportation Engineers Trip Generation Manual 10th Edition

Land Use Code 210 for Single Family Homes. The largest peak hour is the PM Peak, and the Table Below summarizes the AM, PM and Daily trip generation estimates. Transit is not available in the area.

Table 1
Trip Generation

Land Use	AM Peak Hour		PM Peak Hour		Daily Trips
	Enter	Exit	Enter	Exit	
Single Family Homes (166 Homes)	31 Trips	92 Trips	104 Trips	61 Trips	1,567 Trips
TOTAL	**123 Trips**		**165 Trips**		**1,567 Trips**

1. Per the data and methodologies in Trip Generation, 10th Edition, published by ITE.

b. Discuss the effect on traffic congestion on affected roads and describe any traffic improvements necessary. The analysis must discuss the project's impact on the regional transportation system. *If the peak hour traffic generated exceeds 250 vehicles or the total daily trips exceeds 2,500, a traffic impact study must be prepared as part of the EAW.* Use the format and procedures described in the Minnesota Department of Transportation's Access Management Manual, Chapter 5 *(available at: http://www.dot.state.mn.us/accessmanagement/resources.html)* or a similar local guidance,

While the development of the remaining property associated with Crow River Heights West does not generate enough traffic to warrant a full traffic study, one has been completed and is included in the Appendices. The community of Hanover is a bedroom community with large proportion of traffic destined to the Twin Cities during the AM Peak, and from the Twin Cities during the PM peak. Labeaux Avenue NE (CSAH 19) is the primary route taken to destinations to the east. The analysis considered two design years 2025, (the year after build out), and 2040 (the design year consistent with current long- range planning). The analysis indicated that development of 166 single family homes would not result in a change in traffic operations in terms of Level of Service at any of the intersections studied. The study showed that all study area intersections will operate at acceptable Level of Service C or better in the year 2025. However, the analysis did identify that Labeaux Avenue NE (CSAH 19), with or without the project will operate with long queues during the peak hours in 2025 and 2040.

c. Identify measures that will be taken to minimize or mitigate project related transportation effects.

While the project does not result in a change in operations, it suggested that Wright County give consideration to widening Labeaux Avenue NE or CSAH 19 from the existing three lane section to a four-lane section after 2025 to accommodate anticipate growth in background traffic. This improvement will reduce vehicle queuing throughout the community of Hanover. Results of the traffic operational are detailed in the traffic study. (**Attachment 15, Traffic Study**)

19. Cumulative potential effects: (Preparers can leave this item blank if cumulative potential effects are addressed under the applicable EAW Items)

N/A

a. Describe the geographic scales and timeframes of the project related environmental effects that could combine with other environmental effects resulting in cumulative potential effects.

b. Describe any reasonably foreseeable future projects (for which a basis of expectation has been laid) that may interact with environmental effects of the proposed project within the geographic scales and timeframes identified above.

c. Discuss the nature of the cumulative potential effects and summarize any other available information relevant to determining whether there is potential for significant environmental effects due to these cumulative effects.

20. Other potential environmental effects: If the project may cause any additional environmental effects not addressed by items 1 to 19, describe the effects here, discuss the how the environment will be affected, and identify measures that will be taken to minimize and mitigate these effects.

N/A

RGU CERTIFICATION. *(The Environmental Quality Board will only accept **SIGNED** Environmental Assessment Worksheets for public notice in the EQB Monitor.)*

I hereby certify that:

- The information contained in this document is accurate and complete to the best of my knowledge.
- The EAW describes the complete project; there are no other projects, stages or components other than those described in this document, which are related to the project as connected actions or phased actions, as defined at Minnesota Rules, parts 4410.0200, subparts 9c and 60, respectively.
- Copies of this EAW are being sent to the entire EQB distribution list.

Signature Cynthia M Wash Date 4/23/18

Title City Planner

This map was created using Loucks Geographic Information Systems (GIS), it is a compilation of information and data from various sources. This map is not a surveyed or legally recorded map and is intended to be used as a reference. Tom Loucks, Inc. is not responsible for any inaccuracies contained herein.

LOUCKS

Legend

Project Boundary

N

0 1,000

Scale In Feet

Crow River Heights

Hanover, MN

Site Location

Exhibit 1

ATTACHMENT 1

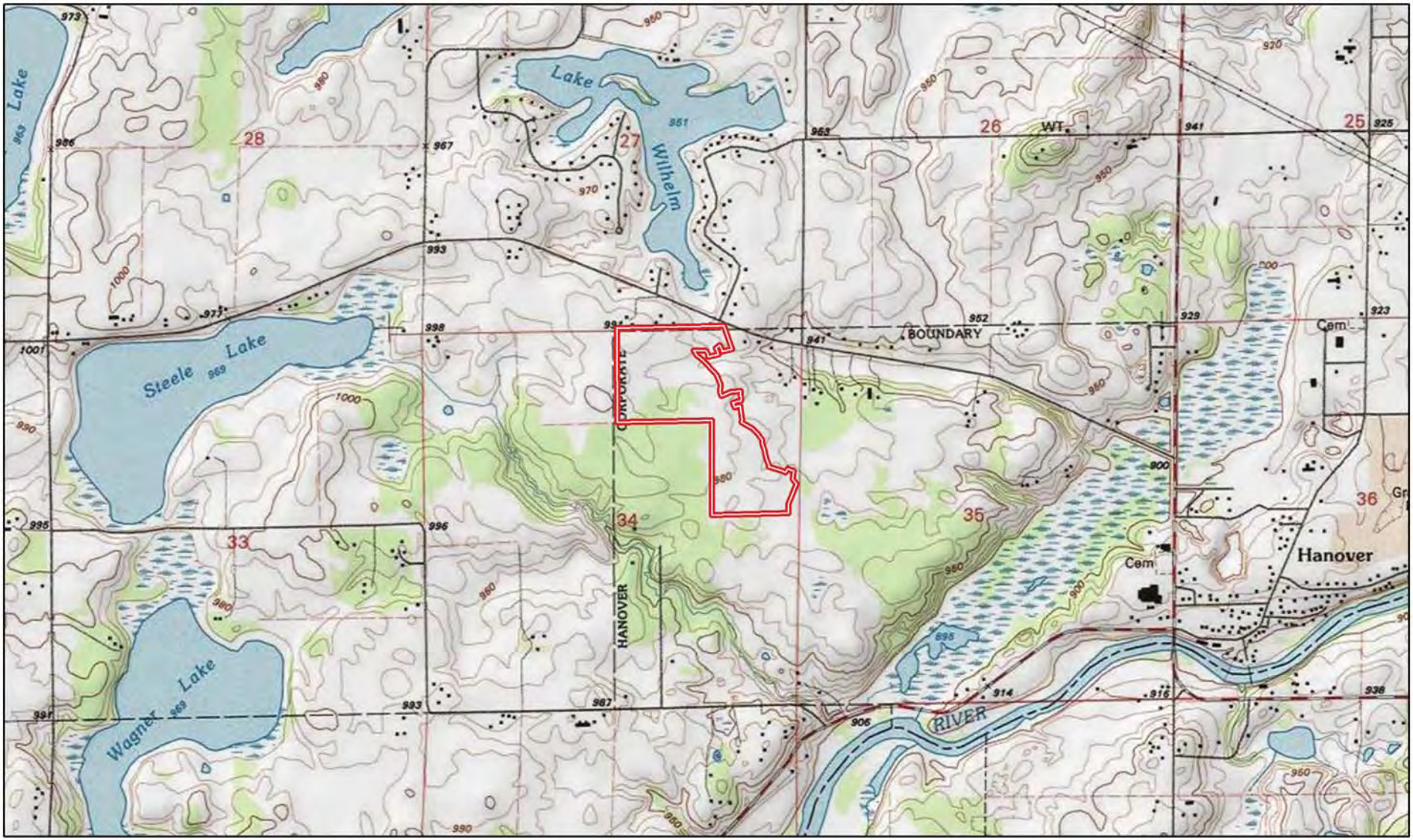

This map was created using Loucks Geographic Information Systems (GIS), it is a compilation of information and data from various sources. This map is not a surveyed or legally recorded map and is intended to be used as a reference. Tom Loucks, Inc. is not responsible for any inaccuracies contained herein.

LOUCKS

Legend

Project Boundary
Sec. 34, T. 120, R. 24

N

0 2,000
Scale In Feet

Crow River Heights

Hanover, MN

USGS Topography

Exhibit 2

ATTACHMENT 2

Attachment 3

CROW RIVER HEIGHTS WEST

FUTURE ADDITIONS

HANOVER, MINNESOTA

PRELIMINARY PLANS FOR:
SITE GRADING, SANITARY SEWER, WATERMAIN,
STORM SEWER AND STREET CONSTRUCTION

VICINITY MAP

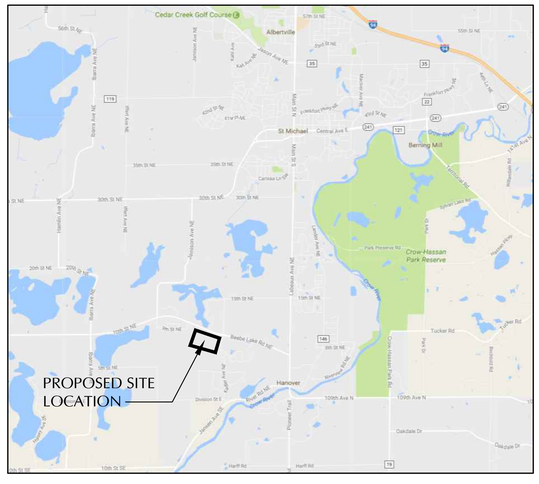

WARNING:

THE CONTRACTOR SHALL BE RESPONSIBLE FOR CALLING FOR LOCATIONS OF ALL EXISTING UTILITIES. THEY SHALL COOPERATE WITH ALL UTILITY COMPANIES IN MAINTAINING THEIR SERVICE AND / OR RELOCATION OF LINES.

THE CONTRACTOR SHALL CONTACT GOPHER STATE ONE CALL AT 651-454-0002 AT LEAST 48 HOURS IN ADVANCE FOR THE LOCATIONS OF ALL UNDERGROUND WIRES, CABLES, CONDUITS, PIPES, MANHOLES, VALVES OR OTHER BURIED STRUCTURES BEFORE DIGGING. THE CONTRACTOR SHALL REPAIR OR REPLACE THE ABOVE WHEN DAMAGED DURING CONSTRUCTION AT NO COST TO THE OWNER.

DEVELOPER

BACKES DEVELOPMENT, LLC
11413 ASHBURY CIRCLE N.
CHAMPLIN, MN 55316

DENNIS BACKES
TEL: 612.369.7750
FAX: 612.566.1525

CALL BEFORE YOU DIG!
Gopher State One Call
TWIN CITY AREA: 651-454-0002
TOLL FREE: 1-800-252-1166

BENCHMARKS

TOP NUT HYDRANT AT END OF JASMINE CT
CUL-DE-SAC, Elevation = 975.48 feet (NGVD1929).

CROW RIVER HEIGHTS WEST FUTURE ADD.
HANOVER, MN

BACKES COMPANIES
11413 ASHBURY CIRCLE N.
CHAMPLIN, MN 55316
PHONE: (612) 369-7750
FAX (612) 566-1525

LOUCKS
PLANNING
CIVIL ENGINEERING
LAND SURVEYING
LANDSCAPE ARCHITECTURE
ENVIRONMENTAL
7200 Hemlock Lane, Suite 300
Maple Grove, MN 55369
763.424.5505
www.loucksinc.com

CADD QUALIFICATION

CADD files prepared by the Consultant for this project are instruments of the Consultant professional services for use solely with respect to this project. These CADD files shall not be used on other projects, for additions to this project, or for completion of this project by others without written approval by the Consultant. Only the original signature and seal/stamp shall be permitted on hard copies of the CADD drawing files for information and reference only. All intentional or unintentional revisions, additions, or deletions to these CADD files shall be made at the full risk of that party making such revisions, additions or deletions and that party shall hold harmless and indemnify the Consultant from any & all responsibilities, claims, and liabilities.

SUBMITTAL/REVISIONS

04/20/18	CITY SUBMITTAL

PROFESSIONAL SIGNATURE

I hereby certify that this plan, specification or report was prepared by me or under my direct supervision and that I am a duly Licensed Professional Engineer under the laws of the State of Minnesota.

PRELIMINARY

Licensed Professional Engineer: Zachary H. Louth - PE
Date: License No. 20383

QUALITY CONTROL

Loucks Project No.	16101A
Project Lead	TWM
Drawn By	ZHW
Checked By	TWM
Review Date	04/02/18

SHEET INDEX

C0-1	COVER SHEET
C1-1	EXISTING CONDITIONS
C1-2	PRELIMINARY PLAT
C2-0 - C2-2	SITE PLAN
C3-0 - C3-2	GRADING PLAN
C3-3 - C3-5	SWPPP PLAN & NOTES
C4-0 - C4-2	UTILITY PLAN
C8-1 - C8-2	DETAILS
L0-1 - L0-3	TREE PRESERVATION
L0-4	TREE INVENTORY
L1-1 - L1-2	LANDSCAPE PLANS
L2-1	LANDSCAPE DETAILS

COVER SHEET
C0-1

Plotted: 04 /18 / 2018 8:21 AM W:\2016\16101A\CADD DATA\CIVIL_dwg\ Sheet Files\C0-1 COVER SHEET

0 100 200
SCALE IN FEET

SURVEY LEGEND

AS	ASH	CATCH BASIN	STORM SEWER
AP	APPLE	STORM MANHOLE	SANITARY SEWER
BA	BASSWOOD	SANITARY MANHOLE	WATERMAIN
BI	BIRCH	WATER MANHOLE	SANITARY SEWER SERVICE
BO	BOXELDER	HYDRANT	WATER SERVICE
BU	BUCKEYE	GATE VALVE	CULVERT
BS	BUSH	POWER POLE	UNDERGROUND CABLE TV
CA	CATULPA	LIGHT POLE	UNDERGROUND ELECTRIC
CE	CEDAR	YARD LIGHT	UNDERGROUND FIBER OPTIC
CO	COTTONWOOD	GUY WIRE	UNDERGROUND GAS
DE	DEAD TREE	SIGN	UNDERGROUND TELEPHONE
EL	ELM	972.5 SPOT ELEVATION	UNDERGROUND UTILITY
FR	MISC FRUIT	A/C UNIT	OVERHEAD UTILITY
FI	FIR	CABLE TV PEDESTAL	UNDERGROUND TRAFFIC
HA	HACKBERRY	ELECTRIC TRANSFORMER	DRAIN TILE
HI	HICKORY	TELEPHONE PEDESTAL	FORCE MAIN
IR	IRONWOOD	UTILITY PEDESTAL	CHAIN LINK FENCE
LI	LINDEN	ELECTRIC MANHOLE	POST FENCE
LO	LOCUST	GAS VALVE	WOOD FENCE
MA	MAPLE	TELEPHONE MANHOLE	GUARDRAIL
OA	OAK	UTILITY MANHOLE	RETAINING WALL
PA	PALM	ELECTRIC METER	TRAFFIC SIGNAL
PI	PINE	GAS METER	CONCRETE CURB
PO	POPLAR	HAND HOLE	CONCRETE
SP	SPRUCE	ROOF DRAIN	BITUMINOUS
TR	TREE (GEN)	ELECTRIC OUTLET	PAVERS
WA	WALNUT	FIRE CONNECTION	872 CONTOUR
WI	WILLOW	MAILBOX	RAILROAD TRACKS
TC	TOP OF CURB	FLAG POLE	CONIFEROUS TREE
TW	TOP OF WALL	GUARDPOST	DECIDUOUS TREE
THSD	ELEV @ THRESHOLD	MONITORING WELL	
		POST INDICATOR VALVE	
		SOIL BORING	WETLAND DELINATION KJOLHAUG ENV. 05/17/18

CROW RIVER HEIGHTS WEST FUTURE ADD.

HANOVER, MN

BACKES COMPANIES
11413 ASHBURY CIRCLE N.
CHAMPLIN, MN 55316
PHONE: (612) 369-7750
FAX (612) 566-1525

LOUCKS
PLANNING
CIVIL ENGINEERING
LAND SURVEYING
LANDSCAPE ARCHITECTURE
ENVIRONMENTAL
7200 Hemlock Lane, Suite 300
Maple Grove, MN 55369
763.424.5505
www.loucksinc.com

CADD QUALIFICATION

CADD files prepared by the Consultant for this project are instruments of the Consultant's professional services for use solely with respect to this project. These CADD files shall not be used on other projects, for additions to this project, or for completion of this project by others without written approval by the Consultant. Under no circumstances shall transfer of these files be permitted, a complete copy of the CADD drawing files for information and reference only. All intentional or unintentional revisions, additions, or deletions to these CADD files shall be made at the full risk of that party making such revisions, additions or deletions and that party shall hold harmless and indemnify the Consultant from any & all responsibilities, claims, and liabilities.

SUBMITTAL/REVISIONS

04/20/18 CITY SUBMITTAL

PROFESSIONAL SIGNATURE

I hereby certify that this plan, specification, or report was prepared by me or under my direct supervision and that I am a duly Licensed Professional Engineer under the laws of the State of Minnesota.

PRELIMINARY

Licensed Zachary H. Lounsbury - PE
Date: 20383

QUALITY CONTROL

Loucks Project No.	16101A
Project Lead	TWM
Drawn By	ZHW
Checked By	TWM
Review Date	04/02/18

SHEET INDEX

C0-1	COVER SHEET
C1-1	EXISTING CONDITIONS
C1-2	PRELIMINARY PLAT
C2-0 - C2-2	SITE PLAN
C3-0 - C3-2	GRADING PLAN
C3-3 - C3-5	SWPPP PLAN & NOTES
C4-0 - C4-2	UTILITY PLAN
C8-1 - C8-2	DETAILS
L0-1 - L0-3	TREE PRESERVATION
L0-4	TREE INVENTORY
L1-1 - L1-2	LANDSCAPE PLANS
L2-1	LANDSCAPE DETAILS

CALL BEFORE YOU DIG!
Gopher State One Call
TWIN CITY AREA: 651-454-0002
TOLL FREE: 1-800-252-1166

WARNING:

THE CONTRACTOR SHALL BE RESPONSIBLE FOR CALLING FOR LOCATIONS OF ALL EXISTING UTILITIES. THEY SHALL COOPERATE WITH ALL UTILITY COMPANIES IN MAINTAINING THEIR SERVICE AND / OR RELOCATION OF LINES.

THE CONTRACTOR SHALL CONTACT GOPHER STATE ONE CALL AT 651-454-0002 AT LEAST 48 HOURS IN ADVANCE FOR THE LOCATIONS OF ALL UNDERGROUND WIRES, CABLES, CONDUITS, PIPES, MANHOLES, VALVES OR OTHER BURIED STRUCTURES BEFORE DIGGING. THE CONTRACTOR SHALL REPAIR OR REPLACE THE ABOVE WHEN DAMAGED DURING CONSTRUCTION AT NO COST TO THE OWNER.

EXISTING CONDITIONS

C1-0

Plotted: 04/19/2018 8:22 AM W:\2016\16101A\CADD DATA\CIVIL\ dwg Sheet Files\C1-1 EXISTING CONDITIONS

Preliminary Plat: CROW RIVER HEIGHTS WEST FUTURE ADDITIONS

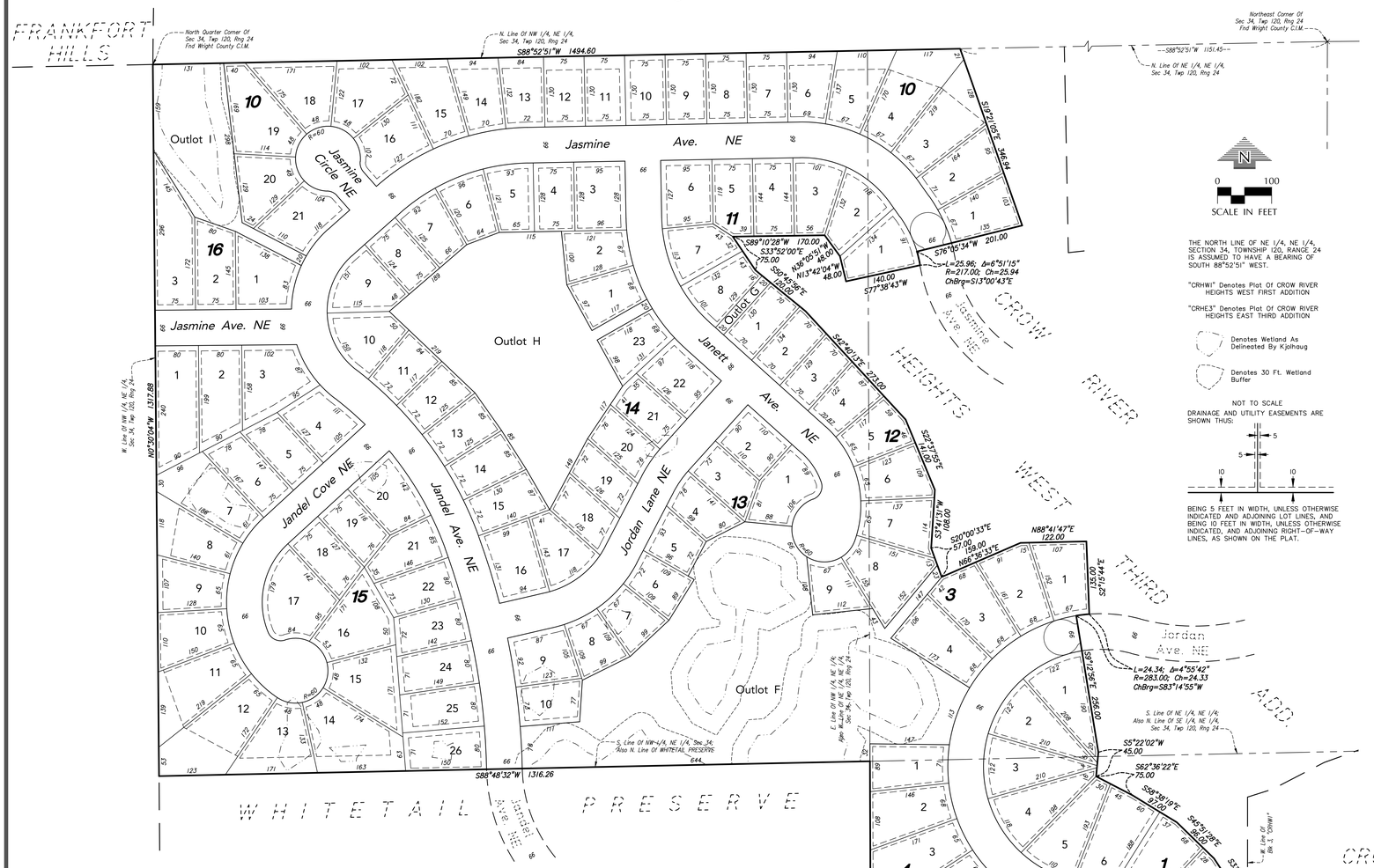

PRELIMINARY PLAT GENERAL NOTES

LEGAL DESCRIPTION:

Those parts of the Northeast Quarter of the Northeast Quarter, the Northwest Quarter of the Northeast Quarter, and the Southeast Quarter of the Northeast Quarter of Section 34, Township 120 North, Range 24 West, Wright County, Minnesota, lying westerly, northerly, southwesterly, westerly, southwesterly and westerly of the following described line:

Commencing at the Northeast corner of said Northeast Quarter; thence westerly, on an assumed bearing of South 88 degrees 52 minutes 51 seconds West, along the north line of said Northeast Quarter, a distance of 1151.45 feet to the point of beginning of the line to be described; thence South 19 degrees 21 minutes 05 seconds East a distance of 346.94 feet; thence South 76 degree 05 minutes 34 seconds West a distance of 201.00 feet; thence southerly 25.96 feet along a non-tangential curve concave to the west, said curve has a radius of 217.00 feet, a central angle of 6 degrees 51 minutes 15 seconds, and a chord that bears South 13 degrees 00 minutes 43 seconds East; thence South 77 degrees 38 minutes 43 seconds West, not tangent to said curve a distance of 140.00 feet; thence North 13 degrees 42 minutes 04 seconds West a distance of 48.00 feet; thence North 36 degrees 05 minutes 51 seconds West a distance of 48.00 feet; thence South 89 degrees 10 minutes 28 seconds West a distance of 170.00 feet; thence South 33 degrees 52 minutes 00 seconds East a distance of 75.00 feet; thence South 50 degrees 45 minutes 56 seconds East a distance of 120.00 feet; thence South 42 degrees 40 minutes 13 seconds East a distance of 273.00 feet; thence South 22 degrees 37 minutes 55 seconds East a distance of 141.00 feet; thence South 3 degrees 41 minutes 31 seconds West a distance of 108.00 feet; thence South 20 degrees 00 minutes 33 seconds East a distance of 57.00 feet; thence North 66 degrees 36 minutes 33 seconds East a distance of 159.00 feet; thence North 88 degrees 41 minutes 47 seconds East a distance of 122.00 feet; thence South 2 degrees 15 minutes 44 seconds East a distance of 135.00 feet; thence westerly 24.34 feet along a non-tangential curve concave to the south, said curve has a radius of 283.00 feet, a central angle of 4 degrees 55 minutes 42 seconds, and a chord that bears South 83 degrees 14 minutes 55 seconds West; thence South 9 degrees 12 minutes 56 seconds East, not tangent to said curve a distance of 256.00 feet; thence South 5 degrees 22 minutes 02 seconds West a distance of 45.00 feet; thence South 62 degrees 36 minutes 22 seconds East a distance of 75.00 feet; thence South 58 degrees 38 minutes 19 seconds East a distance of 97.00 feet; thence South 45 degrees 51 minutes 28 seconds East a distance of 96.00 feet; thence South 33 degrees 17 minutes 50 seconds East a distance of 113.00 feet to the west line of Block 3, CROW RIVER HEIGHTS WEST FIRST ADDITION, Wright County, Minnesota; thence on a bearing of SOUTH, a distance of 39.13 feet to a corner of Lot 6, said Block 3; thence southeasterly, northeasterly, easterly, southerly and southeasterly, along the southwesterly boundary of said CROW RIVER HEIGHTS WEST FIRST ADDITION, a distance of 945.55 feet to the most southerly corner of Lot 1, Block 5, said CROW RIVER HEIGHTS WEST FIRST ADDITION, which corner is also on the west line of Block 4, CROW RIVER HEIGHTS EAST THIRD ADDITION, said Wright County; thence southwesterly and southerly, along the westerly line of said CROW RIVER HEIGHTS EAST THIRD ADDITION, and said line extended, a distance of 428.09 feet, to the south line of said Southeast Quarter of the Northeast Quarter and there terminating.

SURVEYOR:
Loucks
7200 Hemlock Lane, Suite 300
Maple Grove, MN 55330
612-369-7750

OWNER/DEVELOPER:
Backes Development, LLC
11413 Ashbury Circle N.
Champlin, MN 55316
612-369-7750

DATE OF PREPARATION:
April 2018

BENCHMARK:
Top nut of hydrant located in cul-de-sac of Jasmine Court as shown on Sheet 2 of 3.
Elev. = 975.48 (NAVD 88)

EXISTING ZONING:
Zone: R1A

PROPOSED ZONING:
Zone: R1A with PUD Overlay

FLOOD ZONE DESIGNATION:
This property is contained in an unprinted Flood Insurance Rate Map (no special flood hazard areas).

AREAS:

Proposed Lots =	1,902,756 SF or	43.68 Acres
Proposed Outlot A =	2,938 SF or	0.07 Acres
Proposed Outlot B =	87,377 SF or	2.00 Acres
Proposed Outlot C =	45,233 SF or	1.04 Acres
Proposed Outlot D =	137,323 SF or	3.15 Acres
Proposed Outlot E =	68,170 SF or	1.56 Acres
Proposed Outlot F =	210,356 SF or	4.83 Acres
Proposed Outlot G =	2,594 SF or	0.06 Acres
Proposed Outlot H =	113,041 SF or	2.60 Acres
Proposed Outlot I =	40,859 SF or	0.94 Acres
Proposed R.O.W. =	524,799 SF or	12.05 Acres
Total Property =	3,135,448 SF or	71.98 Aces

PROPOSED BUILDING SETBACKS:

Front	=	25 - 45 Feet Minimum, Varies
Side (Corner)	=	25/30 Feet Minimum, Varies
Side (Interior)	=	10 Feet
Rear	=	10/20/30 Feet Minimum, Varies

PROPOSED LOT DATA:
No. Lots = 159
Minimum Lot Size = 7,342 SF
Average Lot Size = 11,968 SF

WETLANDS:
Wetland Area = 267,156 SF or 6.13 Acres

Block	Lot	Area (sf)	Width @ Front Setback	Front Setback	Rear Setback	Side Setback	Side Street Setback	House Pad Width	House Pad Depth
1	1	13167	106	30	30	10	N/A	55	50
	2	13232	107	30	30	10	N/A	55	50
	3	13236	107	30	30	10	N/A	55	50
	4	13459	104	30	30	10	N/A	55	50
	5	13706	97	35	30	10	N/A	55	50
	6	16530	76	35	30	10	N/A	55	50
	7	16226	76	37	30	10	N/A	55	50
	8	15525	77	40	30	10	N/A	55	50
	9	13936	78	43	30	10	N/A	55	50
	10	12385	78	41	30	10	N/A	55	50
2	1	11965	79	30	30	10	N/A	55	50
	2	11476	79	30	30	10	N/A	55	50
	3	11071	79	30	30	10	N/A	55	50
	4	9952	80	30	30	10	N/A	55	50
	5	11784	113	30	30	10	N/A	55	50
	6	11438	112	30	30	10	N/A	55	50
	7	10848	126	25	30	10	N/A	55	50
	8	9219	89	25	20	10	N/A	55	50
3	1	12134	79	45	30	10	N/A	55	50
	2	13556	79	45	30	10	N/A	55	50
	3	14838	79	45	30	10	N/A	55	50
	4	14686	79	45	30	10	N/A	55	50
4	1	11591	75	30	30	10	N/A	55	50
	2	13480	75	30	30	10	N/A	55	50
	3	17092	75	40	30	10	N/A	55	50
	4	19716	75	40	30	10	N/A	55	50
	5	10436	75	30	20	10	N/A	55	50
5	1	11838	98	30	30	10	N/A	55	50
	2	12023	93	30	30	10	N/A	55	50
	3	11441	93	30	30	10	N/A	55	50
	4	10175	93	30	20	10	N/A	55	50
	5	11315	95	30	20	10	25	55	50
	6	10838	86	25	30	10	N/A	55	50
	7	13944	77	25	30	10	N/A	55	50
6	1	14982	71	25	30	10	N/A	50	50
	2	23736	77	25	30	10	N/A	55	50
	3	9720	84	25	10	10	N/A	55	50
7	1	8044	75	25	10	10	N/A	55	50
	2	10111	91	30	10	10	25	55	50
	3	10430	75	30	20	10	N/A	55	50
	4	12362	98	30	10	10	30	55	50
	5	12307	77	25	20	10	N/A	55	50
	6	25873	77	25	30	10	N/A	55	50
	7	18974	77	25	30	10	N/A	55	50
	8	16660	107	25	30	10	N/A	55	50
	9	14432	84	25	30	10	N/A	55	50
	10	12316	75	25	30	10	N/A	55	50
	11	9022	75	25	20	10	N/A	55	50
8	1	7516	70	25	10	10	N/A	50	50
	2	10294	75	25	20	10	N/A	55	50
	3	9889	75	25	20	10	N/A	55	50
	4	7342	75	25	10	10	N/A	55	45
	5	7574	75	25	10	10	N/A	55	45
	6	9039	75	25	20	10	N/A	55	50
	7	10885	97	25	20	10	30	55	50

Block	Lot	Area (sf)	Width @ Front Setback	Front Setback	Rear Setback	Side Setback	Side Street Setback	House Pad Width	House Pad Depth
9	1	10546	121	25	20	10	N/A	55	50
	2	9788	83	25	30	10	N/A	55	50
	3	9563	77	25	30	10	N/A	55	50
	4	9954	77	25	30	10	N/A	55	50
10	1	11490	75	30	30	10	N/A	55	50
	2	12314	75	30	30	10	N/A	55	50
	3	17170	75	30	30	10	N/A	55	50
	4	18589	75	32	30	10	N/A	55	50
	5	12928	75	32	30	10	N/A	55	50
	6	10718	75	30	30	10	N/A	55	50
	7	9750	75	30	30	10	N/A	55	50
	8	9750	75	30	30	10	N/A	55	50
	9	9750	75	30	30	10	N/A	55	50
	10	9750	75	30	30	10	N/A	55	50
	11	9750	75	30	30	10	N/A	55	50
	12	9750	75	30	30	10	N/A	55	50
	13	10195	75	30	30	10	N/A	55	50
	14	11310	75	30	30	10	N/A	55	50
	15	13642	75	30	30	10	N/A	55	50
	16	13141	96	30	20	10	30	55	50
	17	14344	77	30	30	10	N/A	55	50
	18	13964	77	30	30	10	N/A	55	50
	19	16615	77	30	30	10	N/A	55	50
	20	11668	76	30	20	10	N/A	55	50
	21	12462	96	30	20	10	30	55	50
11	1	11344	75	30	30	10	N/A	55	50
	2	10898	75	30	30	10	N/A	55	50
	3	11033	75	30	30	10	N/A	55	50
	4	10802	75	30	30	10	N/A	55	50
	5	10340	75	30	30	10	N/A	55	50
	6	11676	75	30	20	10	30	55	50
	7	10558	75	30	20	10	N/A	55	50
	8	10422	75	30	30	10	N/A	55	50
12	1	9230	70	30	30	10	N/A	50	50
	2	9240	70	30	30	10	N/A	50	50
	3	8795	70	30	20	10	N/A	50	50
	4	9366	75	30	20	10	N/A	55	50
	5	10298	75	30	20	10	N/A	55	50
	6	11125	75	30	30	10	N/A	55	50
	7	11979	75	30	30	10	N/A	55	50
	8	15626	77	30	30	10	N/A	55	50
	9	8649	78	25	10	10	N/A	55	45
13	1	12514	99	25	30	10	25	55	50
	2	9890	90	25	20	10	25	55	50
	3	9409	75	25	30	10	N/A	55	50
	4	9122	75	25	20	10	N/A	55	50
	5	7908	88	25	10	10	N/A	55	45
	6	8580	76	25	20	10	N/A	55	50
	7	8794	75	25	20	10	N/A	55	50
	8	8794	75	25	20	10	N/A	55	50
	9	11201	95	30	20	10	30	55	50
	10	8960	75	30	20	10	N/A	55	50

Block	Lot	Area (sf)	Width @ Front Setback	Front Setback	Rear Setback	Side Setback	Side Street Setback	House Pad Width	House Pad Depth
14	1	9909	75	30	30	10	N/A	55	50
	2	10171	75	30	30	10	N/A	55	50
	3	12118	95	30	30	10	30	55	50
	4	9563	75	30	30	10	N/A	55	50
	5	9928	87	30	20	10	N/A	55	50
	6	9757	88	30	20	10	N/A	55	50
	7	9778	86	30	20	10	N/A	55	50
	8	9315	75	30	20	10	N/A	55	50
	9	11959	136	30	20	10	N/A	55	50
	10	11855	137	30	20	10	N/A	55	50
	11	9130	75	30	20	10	N/A	55	50
	12	9406	75	30	20	10	N/A	55	50
	13	9734	75	30	20	10	N/A	55	50
	14	9951	75	30	30	10	N/A	55	50
	15	10611	75	30	30	10	N/A	55	50
	16	13145	95	25	30	10	30	55	50
	17	10807	106	25	30	10	N/A	55	50
	18	9446	75	25	20	10	N/A	55	50
	19	8773	70	25	20	10	N/A	55	50
	20	9199	75	25	20	10	N/A	55	50
	21	9531	75	25	30	10	N/A	55	50
	22	11622	95	25	30	10	30	55	50
	23	10080	75	30	20	10	N/A	55	50
15	1	17544	80	30	30	10	N/A	55	50
	2	14281	80	30	30	10	N/A	55	50
	3	15284	114	30	30	10	45	55	50
	4	11671	95	30	20	10	30	55	50
	5	10254	75	30	30	10	N/A	55	50
	6	11818	75	30	30	10	N/A	55	50
	7	16244	70	30	30	10	N/A	50	50
	8	13483	71	30	30	10	N/A	50	50
	9	11222	75	30	30	10	N/A	55	50
	10	11777	75	30	30	10	N/A	55	50
	11	16767	75	30	30	10	N/A	55	50
	12	21468	75	30	30	10	N/A	55	50
	13	14738	77	30	30	10	N/A	55	50
	14	19994	77	30	30	10	N/A	55	50
	15	14730	77	30	30	10	N/A	55	50
	16	15387	76	30	30	10	N/A	55	50
	17	16473	166	30	20	10	N/A	55	50
	18	10093	75	30	30	10	N/A	55	50
	19	9134	75	30	20	10	N/A	55	50
	20	12387	102	30	20	10	N/A	55	50
	21	10312	81	30	30	10	N/A	55	50
	22	10478	78	30	30	10	N/A	55	50
	23	10328	78	30	30	10	N/A	55	50
	24	11006	78	30	30	10	N/A	55	50
	25	11356	78	30	30	10	N/A	55	50
	26	11394	78	30	30	10	N/A	55	50
16	1	12712	106	30	20	10	40	55	50
	2	11877	75	30	30	10	N/A	55	50
	3	17538	75	30	30	10	N/A	55	50

CROW RIVER HEIGHTS WEST FUTURE ADD.

HANOVER, MN

BACKES COMPANIES
11413 ASHBURY CIRCLE N.
CHAMPLIN, MN 55316
PHONE: (612) 369-7750
FAX (612) 566-1525

LOUCKS
PLANNING
CIVIL ENGINEERING
LAND SURVEYING
LANDSCAPE ARCHITECTURE
ENVIRONMENTAL
7200 Hemlock Lane, Suite 300
Maple Grove, MN 55369
763.424.5505
www.loucksinc.com

CADD QUALIFICATION

CADD files prepared by the Consultant for this project are instruments of the Consultant professional services for use solely with respect to this project. These CADD files shall not be used on other projects, for additions to this project, or for completion of this project by others without written approval by the Consultant. Under no circumstances shall transfer of these files constitute a sale of the CADD drawing files for information and reference only. All intentional or unintentional revisions, additions, or deletions to these CADD files shall be made at the full risk of that party making such revisions, additions or deletions and that party shall hold harmless and indemnify the Consultant from any & all responsibilities, claims, and liabilities.

SUBMITTAL/REVISIONS

04/20/18 ..... CITY SUBMITTAL

PROFESSIONAL SIGNATURE

I hereby certify that this survey, plan or report was prepared by me or under my direct supervision and that I am a duly Licensed Land Surveyor under the laws of the State of Minnesota.

Henry D. Nelson
Henry D. Nelson - PLS

License No. 17255
Date 4/2/18

QUALITY CONTROL

Loucks Project No.	16-101.AA
Project Lead	HDN
Drawn By	SFM
Checked By	HDN
Field Crew	DP/GF

SHEET INDEX

C0-1 ..... COVER SHEET
C1-1 ..... EXISTING CONDITIONS
C1-2 ..... PRELIMINARY PLAT
C2-0 - C2-2 ..... SITE PLAN
C3-0 - C3-2 ..... GRADING PLAN
C3-3 - C3-5 ..... SWPPP PLAN & NOTES
C4-0 - C4-2 ..... UTILITY PLAN
C8-1 - C8-2 ..... DETAILS

PRELIMINARY PLAT

C1-2

Plotted: 04 /17 / 2018 9:40 AM W:\2016\16101A\CADD DATA\SURVEY_dwg Sheet Files\P16101A-PrePlat

N

0 100 200

SCALE IN FEET

EXISTING	CIVIL LEGEND	PROPOSED
	SANITARY MANHOLE	
	STORM MANHOLE	
	CATCH BASIN	
	CULVERT	
	HYDRANT	
	GATEVALVE	
	POST INDICATOR VALVE	
	LIGHT POLE	
	POWER POLE	
	SIGN	
	BENCHMARK	
	SOIL BORINGS	
	WATER MANHOLE	
	TELEPHONE MANHOLE	
	UTILITY MANHOLE	
	ELECTRIC MANHOLE	
	WATER SERVICE	
	SANITARY SERVICE	
	HANDICAP PARKING	
	DIRECTION OF FLOW	
	SPOT ELEVATION	
	CONTOURS	
	SANITARY SEWER	
	STORM SEWER	
	WATERMAIN	
	FORCEMAIN	
	DRAINTILE	
	SILT FENCE	
	CURB & GUTTER	
	RETAINING WALL	
	TREELINE	
	EASEMENT LINE	
	SETBACK LINE	
	FENCE LINE	
	UNDERGROUND TELE	
	UNDERGROUND GAS	
	OVERHEAD UTILITY	

CROW RIVER HEIGHTS WEST FUTURE ADD.

HANOVER, MN

BACKES COMPANIES
11413 ASHBURY CIRCLE N.
CHAMPLIN, MN 55316
PHONE: (612) 369-7750
FAX (612) 566-1525

LOUCKS
PLANNING
CIVIL ENGINEERING
LAND SURVEYING
LANDSCAPE ARCHITECTURE
ENVIRONMENTAL
7200 Hemlock Lane, Suite 300
Maple Grove, MN 55369
763.424.5505
www.loucksinc.com

WETLANDS

ID #	Area sf	Impact sf	Mitigation sf
1	10,783	0	0
2A	1,712	1,712	3,424
2B	1,600	1,600	3,200
2C	4,153	4,153	8,306
2D	21,766	0	0
2E	40,216	0	0
3	1,276	1,276	2,552
4	18,376	0	0
5	5,981	5,981	11,962
6	39,712	0	0
7	1,014	1,014	2,028
8	2,536	2,536	5,072
10	6,629	6,629	13,258
11	41,815	0	0
12	69,587	0	0

Total Wetland Area = 267,156 sf
Total Wetland Impact = 24,901 sf
Total Mitigation Area= 49,802 sf

CADD QUALIFICATION

CADD files prepared by the Consultant for this project are instruments of the Consultant professional services for use solely with respect to this project. These CADD files shall not be used on other projects, for additions to this project, or for completion of this project by others without written approval by the Consultant. Only the original signature and seal/stamp shall be permitted on obtaining copies of the CADD drawing files for information and reference only. All intentional or unintentional revisions, additions, or deletions to these CADD files shall be made at the full risk of that party making such revisions, additions or deletions and that party shall hold harmless and indemnify the Consultant from any & all responsibilities, claims, and liabilities.

SUBMITTAL/REVISIONS

04/20/18 CITY SUBMITTAL

PROFESSIONAL SIGNATURE

I hereby certify that this plan, specification, or report was prepared by me or under my direct supervision and that I am a duly Licensed Professional Engineer under the laws of the State of Minnesota.

PRELIMINARY

Licensed Name: Tyler W. McLouth - PE
Date: License No. 20383

QUALITY CONTROL

Loucks Project No.	16101A
Project Lead	TWM
Drawn By	ZHW
Checked By	TWM
Review Date	04/02/18

SHEET INDEX

C0-1 ..... COVER SHEET
C1-1 ..... EXISTING CONDITIONS
C1-2 ..... PRELIMINARY PLAT
C2-0 - C2-2 ..... SITE PLAN
C3-0 - C3-2 ..... GRADING PLAN
C3-3 - C3-5 ..... SWPPP PLAN & NOTES
C4-0 - C4-2 ..... UTILITY PLAN
C8-1 - C8-2 ..... DETAILS
L0-1 - L0-3 ..... TREE PRESERVATION
L0-4 ..... TREE INVENTORY
L1-1 - L1-2 ..... LANDSCAPE PLANS
L2-1 ..... LANDSCAPE DETAILS

CALL BEFORE YOU DIG!

Gopher State One Call

TWIN CITY AREA: 651-454-0002
TOLL FREE: 1-800-252-1166

WARNING:

THE CONTRACTOR SHALL BE RESPONSIBLE FOR CALLING FOR LOCATIONS OF ALL EXISTING UTILITIES. THEY SHALL COOPERATE WITH ALL UTILITY COMPANIES IN MAINTAINING THEIR SERVICE AND / OR RELOCATION OF LINES.

THE CONTRACTOR SHALL CONTACT GOPHER STATE ONE CALL AT 651-454-0002 AT LEAST 48 HOURS IN ADVANCE FOR THE LOCATIONS OF ALL UNDERGROUND WIRES, CABLES, CONDUITS, PIPES, MANHOLES, VALVES OR OTHER BURIED STRUCTURES BEFORE DIGGING. THE CONTRACTOR SHALL REPAIR OR REPLACE THE ABOVE WHEN DAMAGED DURING CONSTRUCTION AT NO COST TO THE OWNER.

OVERALL SITE PLAN

C2-0

Plotted: 04/19/2018 9:35 AM W:\2016\16101A\CADD DATA\CIVIL_dwg Sheet Files\C2-1 SITE PLAN

0 50 100
SCALE IN FEET

EXISTING	CIVIL LEGEND	PROPOSED
	SANITARY MANHOLE	
	STORM MANHOLE	
	CATCH BASIN	
	CULVERT	
	HYDRANT	
	GATEVALVE	
	POST INDICATOR VALVE	
	LIGHT POLE	
	POWER POLE	
	SIGN	
	BENCHMARK	
	SOIL BORINGS	
	WATER MANHOLE	
	TELEPHONE MANHOLE	
	UTILITY MANHOLE	
	ELECTRIC MANHOLE	
	WATER SERVICE	
	SANITARY SERVICE	
	HANDICAP PARKING	
	DIRECTION OF FLOW	
	SPOT ELEVATION	
	CONTOURS	
	SANITARY SEWER	
	STORM SEWER	
	WATERMAIN	
	FORCEMAIN	
	DRAINTILE	
	SILT FENCE	
	CURB & GUTTER	
	RETAINING WALL	
	TREELINE	
	EASEMENT LINE	
	SETBACK LINE	
	FENCE LINE	
	UNDERGROUND TELE	
	UNDERGROUND GAS	
	OVERHEAD UTILITY	

CALL BEFORE YOU DIG!
Gopher State One Call
TWIN CITY AREA: 651-454-0002
TOLL FREE: 1-800-252-1166

WARNING:

THE CONTRACTOR SHALL BE RESPONSIBLE FOR CALLING FOR LOCATIONS OF ALL EXISTING UTILITIES. THEY SHALL COOPERATE WITH ALL UTILITY COMPANIES IN MAINTAINING THEIR SERVICE AND / OR RELOCATION OF LINES.

THE CONTRACTOR SHALL CONTACT GOPHER STATE ONE CALL AT 651-454-0002 AT LEAST 48 HOURS IN ADVANCE FOR THE LOCATIONS OF ALL UNDERGROUND WIRES, CABLES, CONDUITS, PIPES, MANHOLES, VALVES OR OTHER BURIED STRUCTURES BEFORE DIGGING. THE CONTRACTOR SHALL REPAIR OR REPLACE THE ABOVE WHEN DAMAGED DURING CONSTRUCTION AT NO COST TO THE OWNER.

CROW RIVER HEIGHTS WEST FUTURE ADD.

HANOVER, MN

BACKES COMPANIES
11413 ASHBURY CIRCLE N.
CHAMPLIN, MN 55316
PHONE: (612) 369-7750
FAX (612) 566-1525

LOUCKS
PLANNING
CIVIL ENGINEERING
LAND SURVEYING
LANDSCAPE ARCHITECTURE
ENVIRONMENTAL
7200 Hemlock Lane, Suite 300
Maple Grove, MN 55369
763.424.5505
www.loucksinc.com

CADD QUALIFICATION

CADD files prepared by the Consultant for this project are instruments of the Consultant professional services for use solely with respect to this project. These CADD files shall not be used on other projects, for additions to this project, or for completion of this project by others without written approval by the Consultant. With the Consultant's approval, others may be permitted to obtain copies of the CADD drawing files for information and reference only. All intentional or unintentional revisions, additions, or deletions to these CADD files shall be made at the full risk of that party making such revisions, additions or deletions and that party shall hold harmless and indemnify the Consultant from any & all responsibilities, claims, and liabilities.

SUBMITTAL/REVISIONS

04/20/18	CITY SUBMITTAL

PROFESSIONAL SIGNATURE

I hereby certify that this plan, specification, or report was prepared by me or under my direct supervision and that I am a duly Licensed Professional Engineer under the laws of the State of Minnesota.

PRELIMINARY

Licensed McLouth - PE
Date 20383

QUALITY CONTROL

Loucks Project No.	16101A
Project Lead	TWM
Drawn By	ZHW
Checked By	TWM
Review Date	04/02/18

SHEET INDEX

C0-1	COVER SHEET
C1-1	EXISTING CONDITIONS
C1-2	PRELIMINARY PLAT
C2-0 - C2-2	SITE PLAN
C3-0 - C3-2	GRADING PLAN
C3-3 - C3-5	SWPPP PLAN & NOTES
C4-0 - C4-2	UTILITY PLAN
C8-1 - C8-2	DETAILS
L0-1 - L0-3	TREE PRESERVATION
L0-4	TREE INVENTORY
L1-1 - L1-2	LANDSCAPE PLANS
L2-1	LANDSCAPE DETAILS

NORTH SITE PLAN

C2-1

Plotted: 04 /19 / 2018 9:35 AM W:\2016\16101A\CADD DATA\CIVIL\ dwg Sheet File\C2-1 SITE PLAN

EXISTING	CIVIL LEGEND	PROPOSED
	SANITARY MANHOLE	
	STORM MANHOLE	
	CATCH BASIN	
	CULVERT	
	HYDRANT	
	GATEVALVE	
	POST INDICATOR VALVE	
	LIGHT POLE	
	POWER POLE	
	SIGN	
	BENCHMARK	
	SOIL BORINGS	
	WATER MANHOLE	
	TELEPHONE MANHOLE	
	UTILITY MANHOLE	
	ELECTRIC MANHOLE	
	WATER SERVICE	
	SANITARY SERVICE	
	HANDICAP PARKING	
	DIRECTION OF FLOW	
	SPOT ELEVATION	
	CONTOURS	
	SANTARY SEWER	
	STORM SEWER	
	WATERMAIN	
	FORCEMAIN	
	DRAINTILE	
	SILT FENCE	
	CURB & GUTTER	
	RETAINING WALL	
	TREELINE	
	EASEMENT LINE	
	SETBACK LINE	
	FENCE LINE	
	UNDERGROUND TELE	
	UNDERGROUND GAS	
	OVERHEAD UTILITY	

0 50 100
SCALE IN FEET

CALL BEFORE YOU DIG!
Gopher State One Call
TWIN CITY AREA: 651-454-0002
TOLL FREE: 1-800-252-1166

WARNING:

THE CONTRACTOR SHALL BE RESPONSIBLE FOR CALLING FOR LOCATIONS OF ALL EXISTING UTILITIES. THEY SHALL COOPERATE WITH ALL UTILITY COMPANIES IN MAINTAINING THEIR SERVICE AND / OR RELOCATION OF LINES.

THE CONTRACTOR SHALL CONTACT GOPHER STATE ONE CALL AT 651-454-0002 AT LEAST 48 HOURS IN ADVANCE FOR THE LOCATIONS OF ALL UNDERGROUND WIRES, CABLES, CONDUITS, PIPES, MANHOLES, VALVES OR OTHER BURIED STRUCTURES BEFORE DIGGING. THE CONTRACTOR SHALL REPAIR OR REPLACE THE ABOVE WHEN DAMAGED DURING CONSTRUCTION AT NO COST TO THE OWNER.

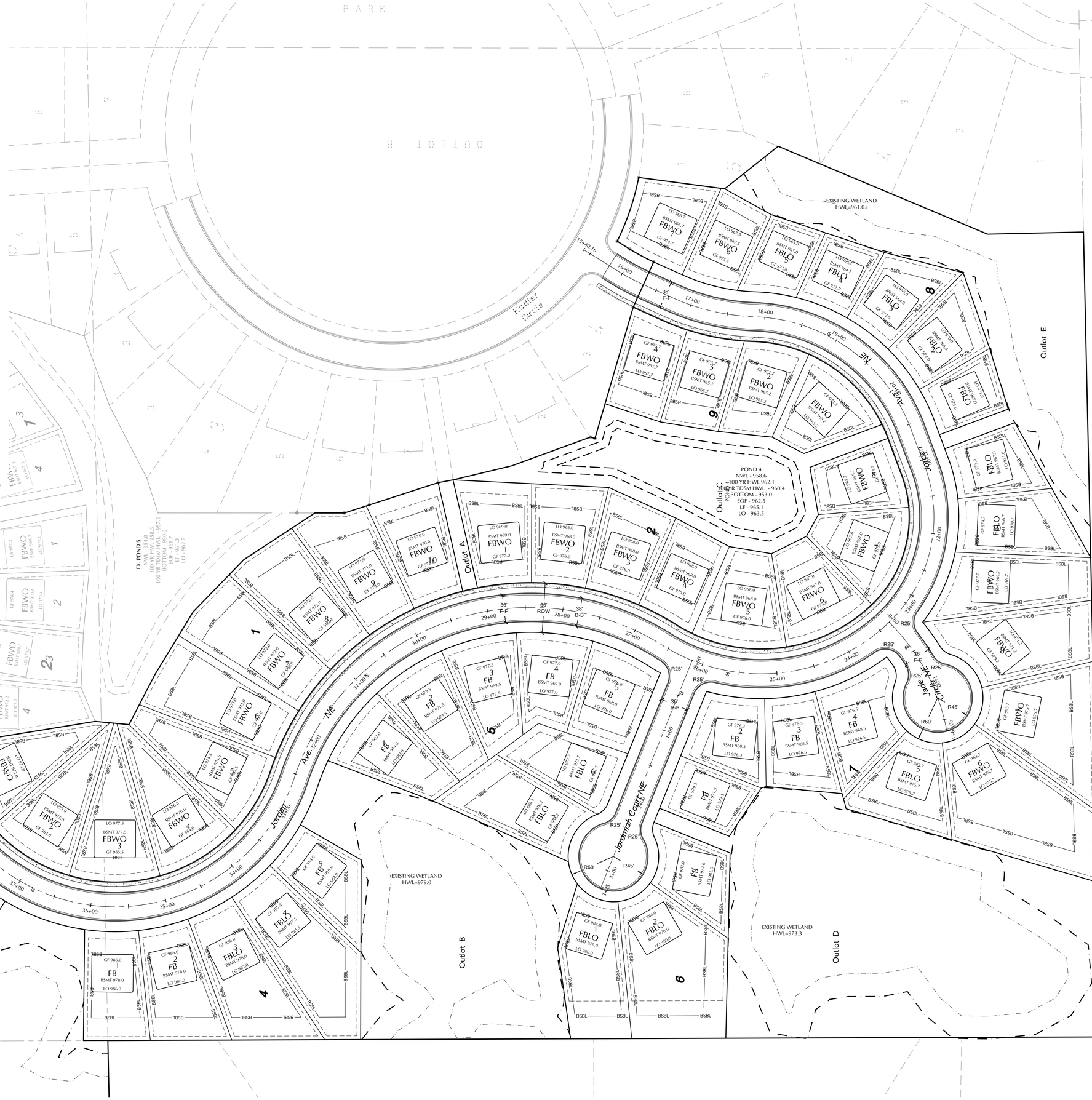

CROW RIVER HEIGHTS WEST FUTURE ADD.
HANOVER, MN

BACKES COMPANIES
11413 ASHBURY CIRCLE N.
CHAMPLIN, MN 55316
PHONE: (612) 369-7750
FAX (612) 566-1525

LOUCKS
PLANNING
CIVIL ENGINEERING
LAND SURVEYING
LANDSCAPE ARCHITECTURE
ENVIRONMENTAL
7200 Hemlock Lane, Suite 300
Maple Grove, MN 55369
763.424.5505
www.loucksinc.com

CADD QUALIFICATION

CADD files prepared by the Consultant for this project are instruments of the Consultant professional services for use solely with respect to this project. These CADD files shall not be used on other projects, for additions to this project, or for completion of this project by others without written approval by the Consultant. With the Consultant's approval, others may be permitted to obtain copies of the CADD drawing files for information and reference only. All intentional or unintentional revisions, additions, or deletions to these CADD files shall be made at the full risk of that party making such revisions, additions or deletions and that party shall hold harmless and indemnify the Consultant from any & all responsibilities, claims, and liabilities.

SUBMITTAL/REVISIONS

04/20/18	CITY SUBMITTAL

PROFESSIONAL SIGNATURE

I hereby certify that this plan, specification or report was prepared by me or under my direct supervision and that I am a duly Licensed Professional Engineer under the laws of the State of Minnesota.

PRELIMINARY

License Number 20383
Date

QUALITY CONTROL

Loucks Project No.	16101A
Project Lead	TWM
Drawn By	ZHW
Checked By	TWM
Review Date	04/02/18

SHEET INDEX

C0-1	COVER SHEET
C1-1	EXISTING CONDITIONS
C1-2	PRELIMINARY PLAT
C2-0 - C2-2	SITE PLAN
C3-0 - C3-2	GRADING PLAN
C3-3 - C3-5	SWPPP PLAN & NOTES
C4-0 - C4-2	UTILITY PLAN
C8-1 - C8-2	DETAILS
L0-1 - L0-3	TREE PRESERVATION
L0-4	TREE INVENTORY
L1-1 - L1-2	LANDSCAPE PLANS
L2-1	LANDSCAPE DETAILS

SOUTH SITE PLAN

C2-2

Plotted: 04/19/2018 9:35 AM W:\2016\16101A\CADD DATA\CIVIL\ dwg Sheet Files\C2-1 SITE PLAN

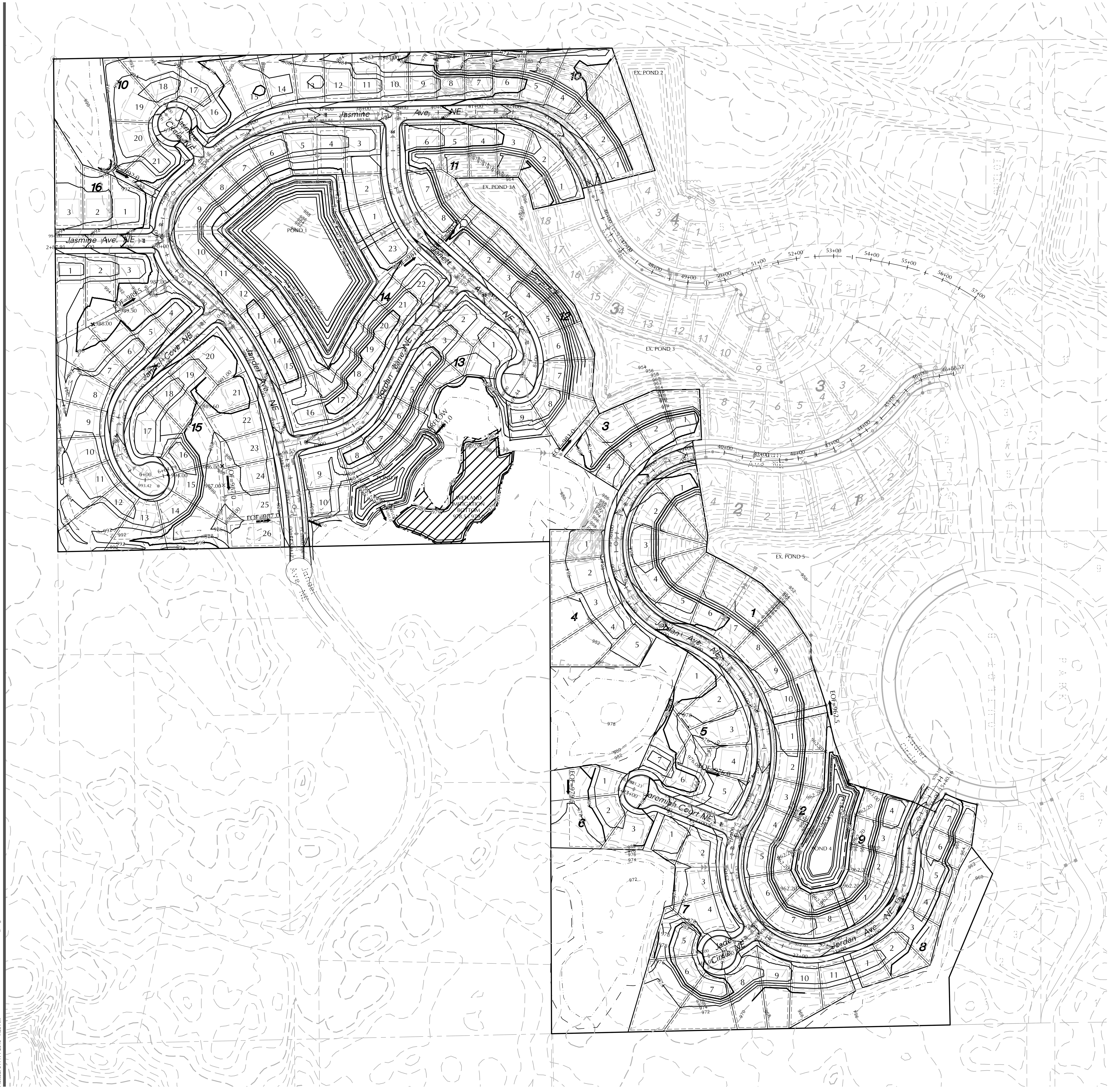

N

0 100 200
SCALE IN FEET

EXISTING	CIVIL LEGEND	PROPOSED
	SANITARY MANHOLE	
	STORM MANHOLE	
	CATCH BASIN	
	CULVERT	
	HYDRANT	
	GATEVALVE	
	POST INDICATOR VALVE	
	LIGHT POLE	
	POWER POLE	
	SIGN	
	BENCHMARK	
	SOIL BORINGS	
	WATER MANHOLE	
	TELEPHONE MANHOLE	
	UTILITY MANHOLE	
	ELECTRIC MANHOLE	
	WATER SERVICE	
	SANITARY SERVICE	
	HANDICAP PARKING	
	DIRECTION OF FLOW	
	SPOT ELEVATION	
	CONTOURS	
	SANITARY SEWER	
	STORM SEWER	
	WATERMAIN	
	FORCEMAIN	
	DRAINTILE	
	SILT FENCE	
	CURB & GUTTER	
	RETAINING WALL	
	TREELINE	
	EASEMENT LINE	
	SETBACK LINE	
	FENCE LINE	
	UNDERGROUND TELE	
	UNDERGROUND GAS	
	OVERHEAD UTILITY	

CROW RIVER HEIGHTS WEST FUTURE ADD.

HANOVER, MN

BACKES COMPANIES
11413 ASHBURY CIRCLE N.
CHAMPLIN, MN 55316
PHONE: (612) 369-7750
FAX (612) 566-1525

LOUCKS
PLANNING
CIVIL ENGINEERING
LAND SURVEYING
LANDSCAPE ARCHITECTURE
ENVIRONMENTAL

7200 Hemlock Lane, Suite 300
Maple Grove, MN 55369
763.424.5505
www.loucksinc.com

CADD QUALIFICATION

CADD files prepared by the Consultant for this project are instruments of the Consultant professional services for use solely with respect to this project. These CADD files shall not be used on other projects, for additions to this project, or for completion of this project by others without written approval by the Consultant. With the Consultant's approval, others may be permitted to obtain copies of the CADD drawing files for information and reference only. All intentional or unintentional revisions, additions, or deletions to these CADD files shall be made at the full risk of that party making such revisions, additions or deletions and that party shall hold harmless and indemnify the Consultant from any & all responsibilities, claims, and liabilities.

SUBMITTAL/REVISIONS

04/20/18 CITY SUBMITTAL

PROFESSIONAL SIGNATURE

I hereby certify that this plan, specification or report was prepared by me or under my direct supervision and that I am a duly Licensed Professional Engineer under the laws of the State of Minnesota.

PRELIMINARY

Todd W. McLouth - PE
License No. 20383
Date

QUALITY CONTROL

Loucks Project No.	16101A
Project Lead	TWM
Drawn By	ZHW
Checked By	TWM
Review Date	04/02/18

SHEET INDEX

C0-1	COVER SHEET
C1-1	EXISTING CONDITIONS
C1-2	PRELIMINARY PLAT
C2-0 - C2-2	SITE PLAN
C3-0 - C3-2	GRADING PLAN
C3-3 - C3-5	SWPPP PLAN & NOTES
C4-0 - C4-2	UTILITY PLAN
C8-1 - C8-2	DETAILS
L0-1 - L0-3	TREE PRESERVATION
L0-4	TREE INVENTORY
L1-1 - L1-2	LANDSCAPE PLANS
L2-1	LANDSCAPE DETAILS

CALL BEFORE YOU DIG!
Gopher State One Call
TWIN CITY AREA: 651-454-0002
TOLL FREE: 1-800-252-1166

WARNING:

THE CONTRACTOR SHALL BE RESPONSIBLE FOR CALLING FOR LOCATIONS OF ALL EXISTING UTILITIES. THEY SHALL COOPERATE WITH ALL UTILITY COMPANIES IN MAINTAINING THEIR SERVICE AND / OR RELOCATION OF LINES.

THE CONTRACTOR SHALL CONTACT GOPHER STATE ONE CALL AT 651-454-0002 AT LEAST 48 HOURS IN ADVANCE FOR THE LOCATIONS OF ALL UNDERGROUND WIRES, CABLES, CONDUITS, PIPES, MANHOLES, VALVES OR OTHER BURIED STRUCTURES BEFORE DIGGING. THE CONTRACTOR SHALL REPAIR OR REPLACE THE ABOVE WHEN DAMAGED DURING CONSTRUCTION AT NO COST TO THE OWNER.

OVERALL GRADING PLAN

C3-0

Plotted: 04 /19 / 2018 9:36 AM W:\2016\16101A\CADD DATA\CIVIL_dwg Sheet Files\C3-1 GRADING PLAN

N

0 50 100

SCALE IN FEET

EXISTING	CIVIL LEGEND	PROPOSED
	SANITARY MANHOLE	
	STORM MANHOLE	
	CATCH BASIN	
	CULVERT	
	HYDRANT	
	GATEVALVE	
INV	POST INDICATOR VALVE	INV
	LIGHT POLE	
	POWER POLE	
	SIGN	
BM	BENCHMARK	
	SOIL BORINGS	
	WATER MANHOLE	
	TELEPHONE MANHOLE	
	UTILITY MANHOLE	
	ELECTRIC MANHOLE	
	WATER SERVICE	
	SANITARY SERVICE	
	HANDICAP PARKING	
1.0%	DIRECTION OF FLOW	1.0%
952.4	SPOT ELEVATION	
952	CONTOURS	952
	SANITARY SEWER	
	STORM SEWER	
	WATERMAIN	
FM	FORCEMAIN	FM
DT	DRAINTILE	DT
	SILT FENCE	
	CURB & GUTTER	
	RETAINING WALL	
	TREELINE	
	EASEMENT LINE	
	SETBACK LINE	
X	FENCE LINE	X
TEL	UNDERGROUND TELE	
GAS	UNDERGROUND GAS	
OH	OVERHEAD UTILITY	

CROW RIVER HEIGHTS WEST FUTURE ADD.

HANOVER, MN

BACKES COMPANIES
11413 ASHBURY CIRCLE N.
CHAMPLIN, MN 55316
PHONE: (612) 369-7750
FAX (612) 566-1525

LOUCKS
PLANNING
CIVIL ENGINEERING
LAND SURVEYING
LANDSCAPE ARCHITECTURE
ENVIRONMENTAL
7200 Hemlock Lane, Suite 300
Maple Grove, MN 55369
763.424.5505
www.loucksinc.com

CADD QUALIFICATION

CADD files prepared by the Consultant for this project are instruments of the Consultant's professional services for use solely with respect to this project. These CADD files shall not be used on other projects, for additions to this project, or for completion of this project by others without written approval by the Consultant. With the Consultant's approval, others may be permitted to obtain copies of the CADD drawing files for information and reference only. All intentional or unintentional revisions, additions, or deletions to these CADD files shall be made at the full risk of that party making such revisions, additions or deletions and that party shall hold harmless and indemnify the Consultant from any & all responsibilities, claims, and liabilities.

SUBMITTAL/REVISIONS

04/20/18	CITY SUBMITTAL

PROFESSIONAL SIGNATURE

I hereby certify that this plan, specification or report was prepared by me or under my direct supervision and that I am a duly Licensed Professional Engineer under the laws of the State of Minnesota.

PRELIMINARY

License Number 20383

Date

QUALITY CONTROL

Loucks Project No.	16101A
Project Lead	TWM
Drawn By	ZHW
Checked By	TWM
Review Date	04/02/18

SHEET INDEX

C0-1	COVER SHEET
C1-1	EXISTING CONDITIONS
C1-2	PRELIMINARY PLAT
C2-0 - C2-2	SITE PLAN
C3-0 - C3-2	GRADING PLAN
C3-3 - C3-5	SWPPP PLAN & NOTES
C4-0 - C4-2	UTILITY PLAN
C8-1 - C8-2	DETAILS
L0-1 - L0-3	TREE PRESERVATION
L0-4	TREE INVENTORY
L1-1 - L1-2	LANDSCAPE PLANS
L2-1	LANDSCAPE DETAILS

CALL BEFORE YOU DIG!

Gopher State One Call

TWIN CITY AREA: 651-454-0002
TOLL FREE: 1-800-252-1166

WARNING:

THE CONTRACTOR SHALL BE RESPONSIBLE FOR CALLING FOR LOCATIONS OF ALL EXISTING UTILITIES. THEY SHALL COOPERATE WITH ALL UTILITY COMPANIES IN MAINTAINING THEIR SERVICE AND / OR RELOCATION OF LINES.

THE CONTRACTOR SHALL CONTACT GOPHER STATE ONE CALL AT 651-454-0002 AT LEAST 48 HOURS IN ADVANCE FOR THE LOCATIONS OF ALL UNDERGROUND WIRES, CABLES, CONDUITS, PIPES, MANHOLES, VALVES OR OTHER BURIED STRUCTURES BEFORE DIGGING. THE CONTRACTOR SHALL REPAIR OR REPLACE THE ABOVE WHEN DAMAGED DURING CONSTRUCTION AT NO COST TO THE OWNER.

NORTH GRADING PLAN

C3-1

Plotted: 04/19/2018 9:36 AM W:\2016\16101A\CADD DATA\CIVIL dwg Sheet Files\C3-1 GRADING PLAN

EXISTING	CIVIL LEGEND	PROPOSED
	SANITARY MANHOLE	
	STORM MANHOLE	
	CATCH BASIN	
	CULVERT	
	HYDRANT	
	GATEVALVE	
	POST INDICATOR VALVE	
	LIGHT POLE	
	POWER POLE	
	SIGN	
	BENCHMARK	
	SOIL BORINGS	
	WATER MANHOLE	
	TELEPHONE MANHOLE	
	UTILITY MANHOLE	
	ELECTRIC MANHOLE	
	WATER SERVICE	
	SANITARY SERVICE	
	HANDICAP PARKING	
	DIRECTION OF FLOW	
	SPOT ELEVATION	
	CONTOURS	
	SANITARY SEWER	
	STORM SEWER	
	WATERMAIN	
	FORCEMAIN	
	DRAINTILE	
	SILT FENCE	
	CURB & GUTTER	
	RETAINING WALL	
	TREELINE	
	EASEMENT LINE	
	SETBACK LINE	
	FENCE LINE	
	UNDERGROUND TELE	
	UNDERGROUND GAS	
	OVERHEAD UTILITY	

0 50 100
SCALE IN FEET

CALL BEFORE YOU DIG!
Gopher State One Call
TWIN CITY AREA: 651-454-0002
TOLL FREE: 1-800-252-1166

WARNING:

THE CONTRACTOR SHALL BE RESPONSIBLE FOR CALLING FOR LOCATIONS OF ALL EXISTING UTILITIES. THEY SHALL COOPERATE WITH ALL UTILITY COMPANIES IN MAINTAINING THEIR SERVICE AND / OR RELOCATION OF LINES.

THE CONTRACTOR SHALL CONTACT GOPHER STATE ONE CALL AT 651-454-0002 AT LEAST 48 HOURS IN ADVANCE FOR THE LOCATIONS OF ALL UNDERGROUND WIRES, CABLES, CONDUITS, PIPES, MANHOLES, VALVES OR OTHER BURIED STRUCTURES BEFORE DIGGING. THE CONTRACTOR SHALL REPAIR OR REPLACE THE ABOVE WHEN DAMAGED DURING CONSTRUCTION AT NO COST TO THE OWNER.

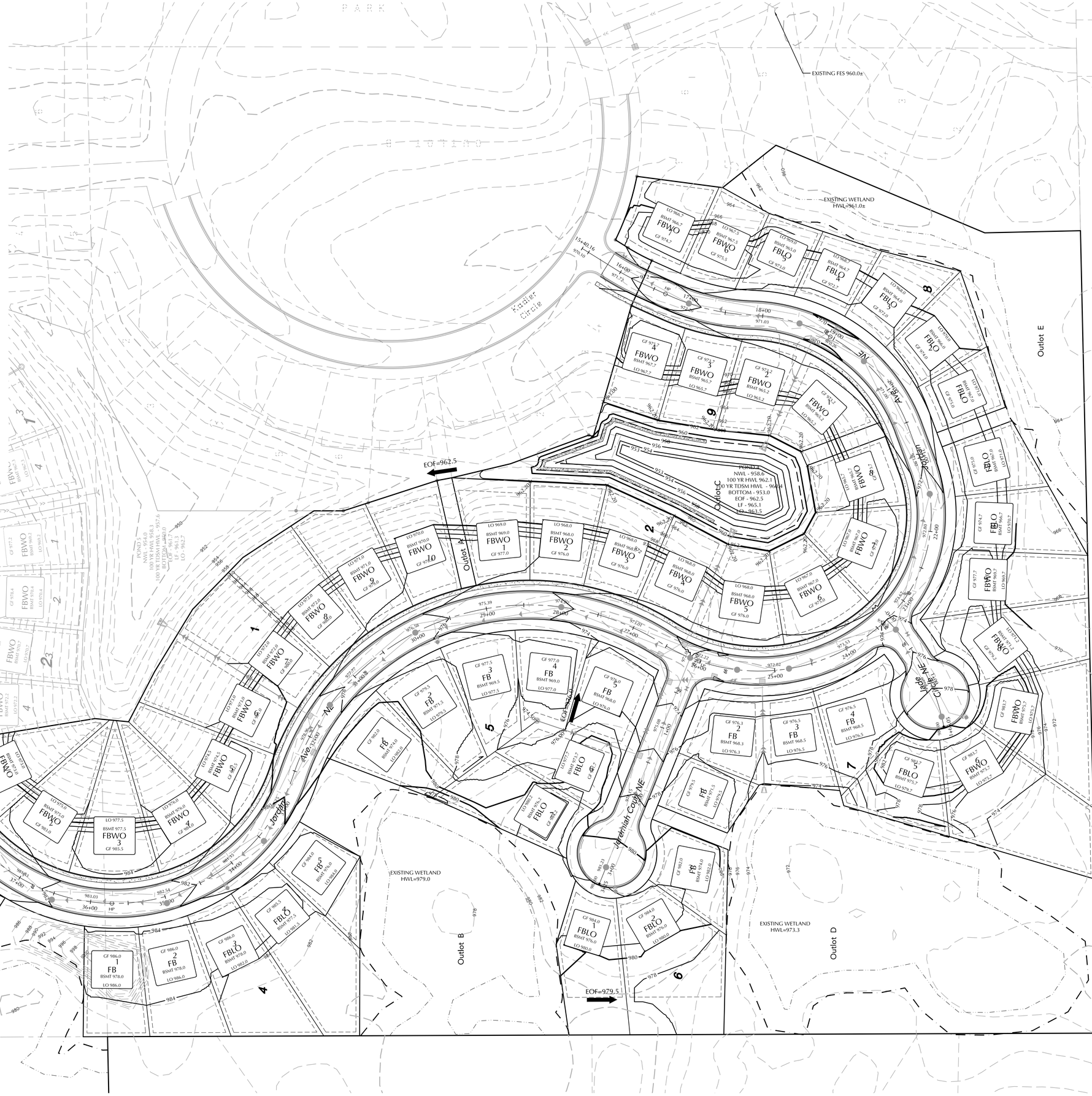

CROW RIVER HEIGHTS WEST FUTURE ADD.
HANOVER, MN

BACKES COMPANIES
11413 ASHBURY CIRCLE N.
CHAMPLIN, MN 55316
PHONE: (612) 369-7750
FAX (612) 566-1525

LOUCKS
PLANNING
CIVIL ENGINEERING
LAND SURVEYING
LANDSCAPE ARCHITECTURE
ENVIRONMENTAL
7200 Hemlock Lane, Suite 300
Maple Grove, MN 55369
763.424.5505
www.loucksinc.com

CADD QUALIFICATION

CADD files prepared by the Consultant for this project are instruments of the Consultant professional services for use solely with respect to this project. These CADD files shall not be used on other projects, for additions to this project, or for completion of this project by others without written approval by the Consultant. Limited hard copy information derived from CADD files is permitted. It is the responsibility of the CADD drawing files for information and reference only. All intentional or unintentional revisions, additions, or deletions to these CADD files shall be made at the full risk of that party making such revisions, additions or deletions and that party shall hold harmless and indemnify the Consultant from any & all responsibilities, claims, and liabilities.

SUBMITTAL/REVISIONS

04/20/18 CITY SUBMITTAL

PROFESSIONAL SIGNATURE

I hereby certify that this plan, specification or report was prepared by me or under my direct supervision and that I am a duly Licensed Professional Engineer under the laws of the State of Minnesota.

PRELIMINARY

Licensed Name: Zachary W. McLouth - PE
Date: License #: 20383

QUALITY CONTROL

Loucks Project No.	16101A
Project Lead	TWM
Drawn By	ZHW
Checked By	TWM
Review Date	04/02/18

SHEET INDEX

C0-1	COVER SHEET
C1-1	EXISTING CONDITIONS
C1-2	PRELIMINARY PLAT
C2-0 - C2-2	SITE PLAN
C3-0 - C3-2	GRADING PLAN
C3-3 - C3-5	SWPPP PLAN & NOTES
C4-0 - C4-2	UTILITY PLAN
C8-1 - C8-2	DETAILS
L0-1 - L0-3	TREE PRESERVATION
L0-4	TREE INVENTORY
L1-1 - L1-2	LANDSCAPE PLANS
L2-1	LANDSCAPE DETAILS

SOUTH GRADING PLAN

C3-2

Plotted: 04/19/2018 9:36 AM W:\2016\16101A\CADD DATA\CIVIL dwg\Sheet Files\C3-1 GRADING PLAN

0 50 100
SCALE IN FEET

EXISTING	CIVIL LEGEND	PROPOSED
	SANITARY MANHOLE	
	STORM MANHOLE	
	CATCH BASIN	
	CULVERT	
	HYDRANT	
	GATEVALVE	
	POST INDICATOR VALVE	
	LIGHT POLE	
	POWER POLE	
	SIGN	
	BENCHMARK	
	SOIL BORINGS	
	WATER MANHOLE	
	TELEPHONE MANHOLE	
	UTILITY MANHOLE	
	ELECTRIC MANHOLE	
	WATER SERVICE	
	SANITARY SERVICE	
	HANDICAP PARKING	
	DIRECTION OF FLOW	
	SPOT ELEVATION	
	CONTOURS	
	SANITARY SEWER	
	STORM SEWER	
	WATERMAIN	
	FORCEMAIN	
	DRAINTILE	
	SILT FENCE	
	CURB & GUTTER	
	RETAINING WALL	
	TREELINE	
	EASEMENT LINE	
	SETBACK LINE	
	FENCE LINE	
	UNDERGROUND TELE	
	UNDERGROUND GAS	
	OVERHEAD UTILITY	

SITE PLAN LEGEND

- SILT FENCE
- BIOROLL
- INLET PROTECTION
- EXISTING DRAINAGE PATTERN
- PROPOSED DRAINAGE PATTERN
- ROCK CONSTRUCTION ENTRANCE
- WOODFIBER BLANKET

CALL BEFORE YOU DIG!
Gopher State One Call
TWIN CITY AREA: 651-454-0002
TOLL FREE: 1-800-252-1166

WARNING:

THE CONTRACTOR SHALL BE RESPONSIBLE FOR CALLING FOR LOCATIONS OF ALL EXISTING UTILITIES. THEY SHALL COOPERATE WITH ALL UTILITY COMPANIES IN MAINTAINING THEIR SERVICE AND / OR RELOCATION OF LINES.

THE CONTRACTOR SHALL CONTACT GOPHER STATE ONE CALL AT 651-454-0002 AT LEAST 48 HOURS IN ADVANCE FOR THE LOCATIONS OF ALL UNDERGROUND WIRES, CABLES, CONDUITS, PIPES, MANHOLES, VALVES OR OTHER BURIED STRUCTURES BEFORE DIGGING. THE CONTRACTOR SHALL REPAIR OR REPLACE THE ABOVE WHEN DAMAGED DURING CONSTRUCTION AT NO COST TO THE OWNER.

CROW RIVER HEIGHTS WEST FUTURE ADD.

HANOVER, MN

BACKES COMPANIES
11413 ASHBURY CIRCLE N.
CHAMPLIN, MN 55316
PHONE: (612) 369-7750
FAX (612) 566-1525

LOUCKS
PLANNING
CIVIL ENGINEERING
LAND SURVEYING
LANDSCAPE ARCHITECTURE
ENVIRONMENTAL
7200 Hemlock Lane, Suite 300
Maple Grove, MN 55369
763.424.5505
www.loucksinc.com

CADD QUALIFICATION

CADD files prepared by the Consultant for this project are instruments of the Consultant professional services for use solely with respect to this project. These CADD files shall not be used on other projects, for additions to this project, or for completion of this project by others without written approval by the Consultant. Only hard copy (paper) documents shall be permitted to obtain copies of the CADD drawing files for information and reference only. All intentional or unintentional revisions, additions, or deletions to these CADD files shall be made at the full risk of that party making such revisions, additions or deletions and that party shall hold harmless and indemnify the Consultant from any & all responsibilities, claims, and liabilities.

SUBMITTAL/REVISIONS

04/20/18	CITY SUBMITTAL

PROFESSIONAL SIGNATURE

I hereby certify that this plan, specification or report was prepared by me or under my direct supervision and that I am a duly Licensed Professional Engineer under the laws of the State of Minnesota.

PRELIMINARY

Licensed McLouth - PE
Date 20383

QUALITY CONTROL

Loucks Project No.	16101A
Project Lead	TWM
Drawn By	ZHW
Checked By	TWM
Review Date	04/02/18

SHEET INDEX

C0-1	COVER SHEET
C1-1	EXISTING CONDITIONS
C1-2	PRELIMINARY PLAT
C2-0 - C2-2	SITE PLAN
C3-0 - C3-2	GRADING PLAN
C3-3 - C3-5	SWPPP PLAN & NOTES
C4-0 - C4-2	UTILITY PLAN
C8-1 - C8-2	DETAILS
L0-1 - L0-3	TREE PRESERVATION
L0-4	TREE INVENTORY
L1-1 - L1-2	LANDSCAPE PLANS
L2-1	LANDSCAPE DETAILS

NORTH SWPPP

C3-3

Plotted: 04 /19 / 2018 9:37 AM W:\2016\16101A\CADD DATA\CIVIL\ .dwg Sheet Files\C3-3 SWPPP

EXISTING	CIVIL LEGEND	PROPOSED
	SANITARY MANHOLE	
	STORM MANHOLE	
	CATCH BASIN	
	CULVERT	
	HYDRANT	
	GATEVALVE	
	POST INDICATOR VALVE	
	LIGHT POLE	
	POWER POLE	
	SIGN	
	BENCHMARK	
	SOIL BORINGS	
	WATER MANHOLE	
	TELEPHONE MANHOLE	
	UTILITY MANHOLE	
	ELECTRIC MANHOLE	
	WATER SERVICE	
	SANITARY SERVICE	
	HANDICAP PARKING	
	DIRECTION OF FLOW	
	SPOT ELEVATION	
	CONTOURS	
	SANITARY SEWER	
	STORM SEWER	
	WATERMAIN	
	FORCEMAIN	
	DRAINTILE	
	SILT FENCE	
	CURB & GUTTER	
	RETAINING WALL	
	TREELINE	
	EASEMENT LINE	
	SETBACK LINE	
	FENCE LINE	
	UNDERGROUND TELE	
	UNDERGROUND GAS	
	OVERHEAD UTILITY	

0 50 100
SCALE IN FEET

SITE PLAN LEGEND

- SF — SILT FENCE
- BIOROLL
- INLET PROTECTION
- EXISTING DRAINAGE PATTERN
- PROPOSED DRAINAGE PATTERN
- ROCK CONSTRUCTION ENTRANCE
- WOODFIBER BLANKET

CALL BEFORE YOU DIG!

Gopher State One Call

TWIN CITY AREA: 651-454-0002
TOLL FREE: 1-800-252-1166

WARNING:

THE CONTRACTOR SHALL BE RESPONSIBLE FOR CALLING FOR LOCATIONS OF ALL EXISTING UTILITIES. THEY SHALL COOPERATE WITH ALL UTILITY COMPANIES IN MAINTAINING THEIR SERVICE AND / OR RELOCATION OF LINES.

THE CONTRACTOR SHALL CONTACT GOPHER STATE ONE CALL AT 651-454-0002 AT LEAST 48 HOURS IN ADVANCE FOR THE LOCATIONS OF ALL UNDERGROUND WIRES, CABLES, CONDUITS, PIPES, MANHOLES, VALVES OR OTHER BURIED STRUCTURES BEFORE DIGGING. THE CONTRACTOR SHALL REPAIR OR REPLACE THE ABOVE WHEN DAMAGED DURING CONSTRUCTION AT NO COST TO THE OWNER.

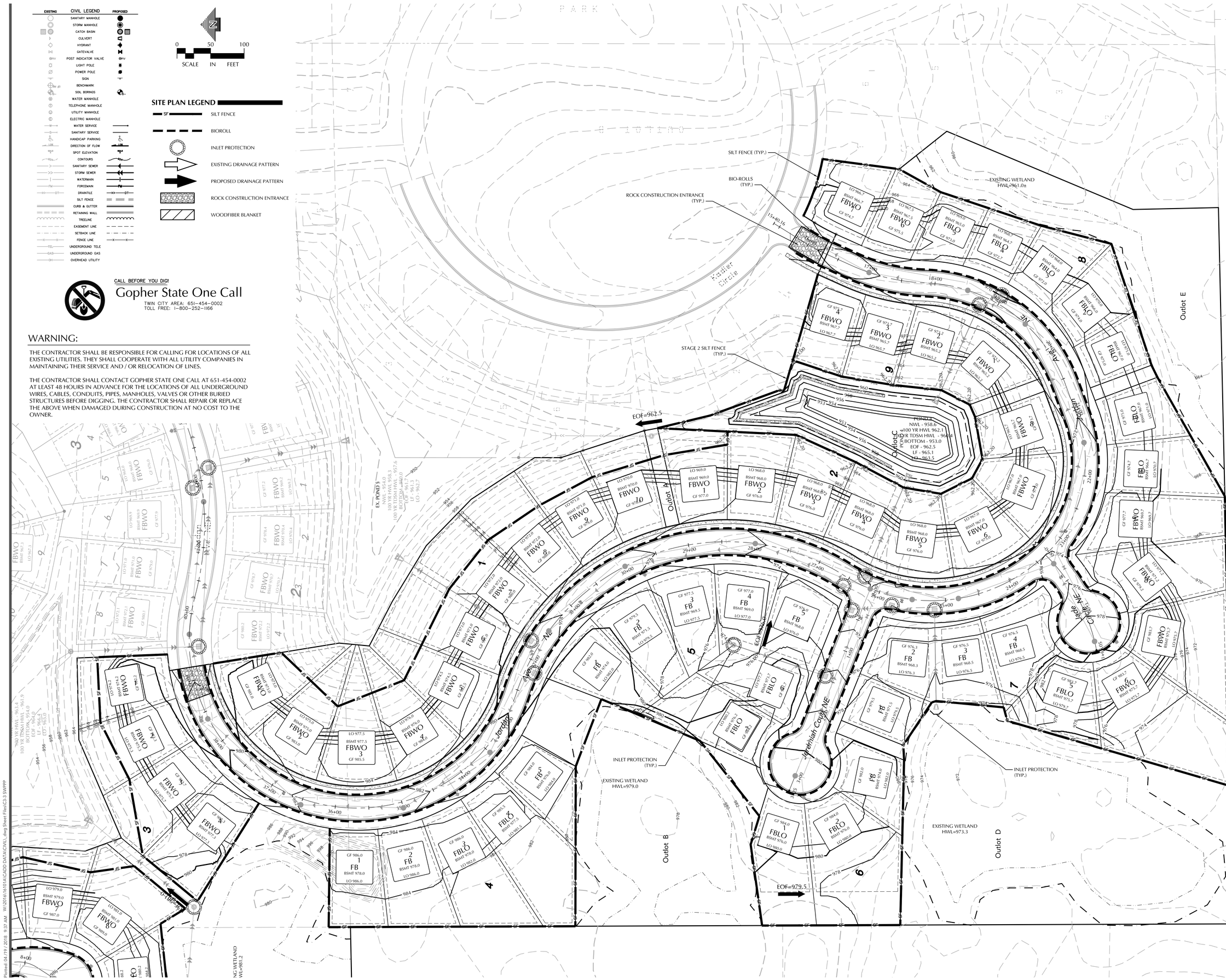

CROW RIVER HEIGHTS WEST FUTURE ADD.

HANOVER, MN

BACKES COMPANIES
11413 ASHBURY CIRCLE N.
CHAMPLIN, MN 55316
PHONE: (612) 369-7750
FAX (612) 566-1525

LOUCKS
PLANNING
CIVIL ENGINEERING
LAND SURVEYING
LANDSCAPE ARCHITECTURE
ENVIRONMENTAL
7200 Hemlock Lane, Suite 300
Maple Grove, MN 55369
763.424.5505
www.loucksinc.com

CADD QUALIFICATION

CADD files prepared by the Consultant for this project are instruments of the Consultant's professional services for use solely with respect to this project. These CADD files shall not be used on other projects, for additions to this project, or for completion of this project by others without written approval by the Consultant. Under no circumstances shall transfer of these files be permitted a release copy of the CADD drawing files for information and reference only. All intentional or unintentional revisions, additions, or deletions to these CADD files shall be made at the full risk of that party making such revisions, additions or deletions and that party shall hold harmless and indemnify the Consultant from any & all responsibilities, claims, and liabilities.

SUBMITTAL/REVISIONS

04/20/18	CITY SUBMITTAL

PROFESSIONAL SIGNATURE

I hereby certify that this plan, specification, or report was prepared by me or under my direct supervision and that I am a duly Licensed Professional Engineer under the laws of the State of Minnesota.

PRELIMINARY

Licensed Professional Engineer: Zachary H. Hoisdorf - PE
Date: 20383

QUALITY CONTROL

Loucks Project No.	16101A
Project Lead	TWM
Drawn By	ZHW
Checked By	TWM
Review Date	04/02/18

SHEET INDEX

C0-1	COVER SHEET
C1-1	EXISTING CONDITIONS
C1-2	PRELIMINARY PLAT
C2-0 - C2-2	SITE PLAN
C3-0 - C3-2	GRADING PLAN
C3-3 - C3-5	SWPPP PLAN & NOTES
C4-0 - C4-2	UTILITY PLAN
C8-1 - C8-2	DETAILS
L0-1 - L0-3	TREE PRESERVATION
L0-4	TREE INVENTORY
L1-1 - L1-2	LANDSCAPE PLANS
L2-1	LANDSCAPE DETAILS

SOUTH SWPPP

C3-4

Plotted: 04/19/2018 9:37 AM W:\2016\16101A\CADD DATA\CIVIL\ dwg\ Sheet Files\C3-3 SWPPP

SWPPP NOTES

1. PROJECT DESCRIPTION
THE NATURE OF THIS PROJECT WILL CONSIST OF CONSTRUCTING SINGLE FAMILY RESIDENTIAL LOTS AND HOMES, UTILITIES AND STREETS.

2. SEQUENCING OF MAJOR CONSTRUCTION ACTIVITIES ARE AS FOLLOWS:

1. INSTALL VEHICLE TRACKING BMP
2. INSTALL SILT FENCE AROUND SITE
3. INSTALL PROTECTIVE FENCE AROUND INFILTRATION AREAS
4. CLEAR AND GRUB SITE
5. STRIP AND STOCKPILE TOPSOIL
6. REMOVE PAVEMENTS AND UTILITIES
7. CONSTRUCT STORMWATER MANAGEMENT BASINS
8. INSTALL SILT FENCE AROUND BASINS
9. ROUGH GRADE SITE
10. IMPORT CLEAN FILL FOR REPLACEMENT AND BALANCE
11. INSTALL UTILITIES
12. INSTALL BUILDING FOUNDATIONS
13. INSTALL CURB AND GUTTER
14. INSTALL PAVEMENTS AND WALKS
15. INSTALL SMALL UTILITIES (GAS, PHONE, ELECTRIC, CABLE, ETC.)
16. FINAL GRADE SITE
17. REMOVE ACCUMULATED SEDIMENT FROM BASINS
18. CONSTRUCT INFILTRATION BASIN
19. SEED AND MULCH
20. WHEN ALL CONSTRUCTION ACTIVITY IS COMPLETE AND THE SITE IS STABILIZED, REMOVE SILT FENCE AND RESEED ANY AREAS DISTURBED BY THE REMOVAL.

3. SITE DATA:

AREA OF DISTURBANCE:	±52.313 AC
PRE-CONSTRUCTION IMPERVIOUS AREA:	±0.0 AC
POST-CONSTRUCTION IMPERVIOUS AREA:	±16.6 AC

GENERAL SOIL TYPE: SEE GEOTECHNICAL REPORT IN SPECIFICATIONS

4. THE LOCATION OF AREAS NOT TO BE DISTURBED MUST BE IDENTIFIED WITH FLAGS, STAKES, SIGNS, SILT FENCE, ETC. BEFORE CONSTRUCTION BEGINS.

5. ALL DISTURBED GROUND LEFT INACTIVE FOR SEVEN (7) OR MORE DAYS SHALL BE STABILIZED BY SEEDING OR SODDING (ONLY AVAILABLE PRIOR TO SEPTEMBER 15) OR BY MULCHING OR COVERING OR OTHER EQUIVALENT CONTROL MEASURE. AT A RATE OF 1.5 TIMES STANDARD SEEDING FINAL STABILIZATION TO BE DONE PER LANDSCAPE PLAN, SEE SHEET L1-1.

6. ON SLOPES 3:1 OR GREATER MAINTAIN SHEET FLOW AND MINIMIZE RILLS AND/OR GULLIES, SLOPE LENGTHS CAN NOT BE GREATER THAN 75 FEET.
ALL 3:1 SLOPES TO BE STABILIZED WITH EROSION CONTROL BLANKET

7. ALL STORM DRAINS AND INLETS MUST BE PROTECTED UNTIL ALL SOURCES OF POTENTIAL DISCHARGE ARE STABILIZED.

8. TEMPORARY SOIL STOCKPILES MUST HAVE EFFECTIVE SEDIMENT CONTROL AND CAN NOT BE PLACED IN SURFACE WATERS OR STORM WATER CONVEYANCE SYSTEMS. TEMPORARY STOCKPILES WITHOUT SIGNIFICANT AMOUNT OF SILT, CLAY, OR ORGANIC COMPOUNDS ARE EXEMPT EX: CLEAN AGGREGATE STOCK PILES, DEMOLITION CONCRETE STOCKPILES, SAND STOCKPILES.

9. SEDIMENT LADEN WATER MUST BE DISCHARGED TO A SEDIMENTATION BASIN WHENEVER POSSIBLE. IF NOT POSSIBLE, IT MUST BE TREATED WITH THE APPROPRIATE BMP'S.

10. SOLID WASTE MUST BE DISPOSED OF PROPERLY AND MUST COMPLY WITH MPCA DISPOSAL REQUIREMENTS.

11. THE WATERSHED DISTRICT OR THE CITY MAY HAVE REQUIREMENTS FOR INSPECTIONS OR AS-BUILT DRAWINGS VERIFYING PROPER CONSTRUCTION OF THE BMPS.

12. THE OWNER WHO SIGNS THE NPDES PERMIT APPLICATION IS A PERMITTEE AND IS RESPONSIBLE FOR COMPLIANCE WITH ALL TERMS AND CONDITIONS OF THE PERMIT. THE OPERATOR (CONTRACTOR) WHO SIGNS THE NPDES PERMIT APPLICATION IS A PERMITTEE FOR PARTS II.B., PART II.C, PART II.B-F, PART V, PART IV AND APPLICABLE CONSTRUCTION ACTIVITY REQUIREMENTS FOUND IN APPENDIX A, PART C. OF THE NPDES PERMIT AND IS JOINTLY RESPONSIBLE WITH THE OWNER FOR COMPLIANCE WITH THOSE PORTIONS OF THE PERMIT.

13. TERMINATION OF COVERAGE-PERMITTEE(S) WISHING TO TERMINATE COVERAGE MUST SUBMIT A NOTICE OF TERMINATION (NOT) TO THE MPCA. ALL PERMITTEE(S) MUST SUBMIT A NOT WITHIN 30 DAYS AFTER ONE OR MORE OF THE FOLLOWING CONDITIONS HAVE BEEN MET:

A. FINAL STABILIZATION, PER NPDES PERMIT PART IV.G. HAS BEEN ACHIEVED ON ALL PORTIONS OF THE SITE FOR WHICH THE PERMITTEE IS RESPONSIBLE.
B. TRANSFER OF OWNERSHIP AS DESCRIBED IN THE PERMIT.

15. INSPECTIONS
A. INITIAL INSPECTION FOLLOWING SILT FENCE INSTALLATION BY CITY REPRESENTATIVE IS REQUIRED.
B. EXPOSED SOIL AREAS: ONCE EVERY 7 DAYS AND WITHIN 24 HOURS FOLLOWING A RAINFALL EVENT GREATER THAN OR EQUAL TO 0.5" IN 24 HOURS.
C. STABILIZED AREAS: ONCE EVERY 30 DAYS
D. FROZEN GROUND: AS SOON AS RUNOFF OCCURS OR PRIOR TO RESUMING CONSTRUCTION.
E. INSPECTION AND MAINTENANCE RECORDS MUST BE RETAINED FOR 3 YEARS AFTER FILING OF THE NOTICE OF TERMINATION AND MUST INCLUDE: DATE AND TIME OF ACTION, NAME OF PERSON(S) CONDUCTING WORK, FINDING OF INSPECTIONS AND RECOMMENDATIONS FOR CORRECTIVE ACTION, DATE AND AMOUNT OF RAINFALL EVENTS GREATER THAN 0.5 INCHES IN A 24 HOUR PERIOD.

16. MINIMUM MAINTENANCE
A. SILT FENCE TO BE REPAIRED, REPLACED, SUPPLEMENTED WHEN NONFUNCTIONAL, OR 1/3 FULL; WITHIN 24 HOURS
B. SEDIMENT BASINS DRAINED AND SEDIMENT REMOVED WHEN REACHES 1/2 STORAGE VOLUME. REMOVAL MUST BE COMPLETE WITHIN 72 HOURS OF DISCOVERY.
C. SEDIMENT REMOVED FROM SURFACE WATERS WITHIN (7)SEVEN DAYS
D. CONSTRUCTION SITE EXITS INSPECTED, TRACKED SEDIMENT REMOVED WITH 24 HOURS.
E. PROVIDE COPIES OF EROSION INSPECTION RESULTS TO CITY ENGINEER FOR ALL RAIN EVENTS GREATER THAN 0.5" OVER 24 HOURS

17. THE SWPPP, INCLUDING ALL CHANGES TO IT, AND INSPECTIONS AND MAINTENANCE RECORDS MUST BE KEPT AT THE SITE DURING CONSTRUCTION ACTIVITY BY THE PERMITTEE(S) WHO HAVE OPERATIONAL CONTROL OF THE SITE.

18. OWNER MUST KEEP RECORDS OF ALL PERMITS REQUIRED FOR THE PROJECT, THE SWPPP, ALL INSPECTIONS AND MAINTENANCE, PERMANENT OPERATION AND MAINTENANCE AGREEMENTS, AND REQUIRED CALCULATIONS FOR TEMPORARY AND PERMANENT STORM WATER MANAGEMENT SYSTEMS. THESE RECORDS MUST BE RETAINED FOR THREE YEARS AFTER FILING NPDES NOTICE OF TERMINATION.

19. SWPPP MUST BE AMENDED WHEN:
A. THERE IS A CHANGE IN DESIGN, OPERATION, MAINTENANCE, WEATHER OR SEASONAL CONDITIONS THAT HAS A SIGNIFICANT EFFECT ON DISCHARGE
B. INSPECTIONS INDICATE THAT THE SWPPP IS NOT EFFECTIVE AND DISCHARGE IS EXCEEDING WATER QUALITY STANDARDS.
C. THE BMP'S IN THE SWPPP ARE NOT CONTROLLING POLLUTANTS IN DISCHARGES OR IS NOT CONSISTENT WITH THE TERMS AND CONDITIONS OF THE PERMIT.
D. AT ANY TIME AFTER PERMIT COVERAGE IS EFFECTIVE, THE MPCA MAY DETERMINE THAT THE PROJECT'S STORMWATER DISCHARGES MAY CAUSE, HAVE REASONABLE POTENTIAL TO CAUSE, OR CONTRIBUTE TO NON-ATTAINMENT OF ANY APPLICABLE WATER QUALITY STANDARD, OR THAT THE SWPPP DOES NOT INCORPORATE THE APPLICABLE REQUIREMENTS IN PART III.A.8., (IMPAIRED WATERS AND TMDLS). IF A WATER QUALITY STANDARD CHANGES DURING THE TERM OF THIS PERMIT, THE MPCA WILL AKE A DETERMINATION AS TO WHETHER A MODIFICATION OF THE SWPPP IS NECESSARY TO ADDRESS THE NEW STANDARD. IF THE MPCA MAKES SUCH DETERMINATION(S) OR ANY OF THE DETERMINATIONS IN PARTS III.B.1.-3., THE MPCA WILL NOTIFY THE PERMITTEE(S) IN WRITING. IN RESPONSE, THE PERMITTEE(S) MUST AMEND THE SWPPP TO ADDRESS THE IDENTIFIED CONCERNS AND SUBMIT INFORMATION REQUESTED BY THE MPCA, WHICH MAY INCLUDE AN INDIVIDUAL PERMIT APPLICATION. IF THE MPCA'S WRITTEN NOTIFICATION REQUIRES A RESPONSE, FAILURE TO RESPOND WITHIN THE SPECIFIED TIMEFRAME CONSTITUTES A PERMIT VIOLATION.

20. CONCRETE WASHOUT AREA
A. CONTRACTOR TO PROVIDE PREFABRICATED CONCRETE WASH-OUT CONTAINER WITH RAIN PROTECTION PER PLAN.
B. CONCRETE WASH-OUT TO BE IDENTIFIED WITH SIGNAGE STATING "CONCRETE WASHOUT AREA DO NOT OVERFILL".
C. CONCRETE WASHOUT WATER NEEDS TO BE PUMPED WITHIN 24 HOURS OF STANDING WATER IN WASHOUT AREA.

21. IN THE EVENT OF ENCOUNTERING A WELL OR SPRING DURING CONSTRUCTION CONTRACTOR TO CEASE CONSTRUCTION ACTIVITY AND NOTIFY ENGINEER.

22. PIPE OUTLETS MUST BE PROVIDED WITH TEMPORARY OR PERMANENT ENERGY DISSIPATION WITHIN 24 HOURS AFTER CONNECTION TO A SURFACE WATER.

23. TEMPORARY AND PERMANENT SOIL STABILIZATION
A. TEMPORARY SOIL STABILIZATION MEASURES SHALL CONSIST OF SEEDING.
B. PERMANENT SOIL STABILIZATION SHALL CONSIST OF HYDRO MULCH OR STRAW MULCH.
C. 7 DAY STABILIZATION TIME FRAME IS REQUIRED FOR ALL EXPOSED SOILS THAT ARE DORMANT OR NOT BEING WORKED WITHIN THE 7 DAY WINDOW.

24. FINAL STABILIZATION
FINAL STABILIZATION REQUIRES THAT ALL SOIL DISTURBING ACTIVITIES HAVE BEEN COMPLETED AND THAT DISTURBED AREAS ARE STABILIZED BY A UNIFORM PERENNIAL VEGETATIVE COVER WITH 70% OF THE EXPECTED FINAL DENSITY, AND THAT ALL PERMANENT PAVEMENTS HAVE BEEN INSTALLED. ALL TEMPORARY BMP'S SHALL BE REMOVED, DITCHES STABILIZED, AND SEDIMENT SHALL BE REMOVED FROM PERMANENT CONVEYANCES AND SEDIMENTATION BASINS IN ORDER TO RETURN THE POND TO DESIGN CAPACITY.

24. TEMPORARY SEDIMENTATION BASINS
A. THE TEMPORARY SEDIMENTATION BASINS SHALL BE CONSTRUCTED AND MADE OPERATIONAL PRIOR TO DISTURBANCE OF 10 OR MORE ACRES DRAINING TO A COMMON LOCATION.
B. TEMPORARY SEDIMENTATION BASINS ARE REQUIRED PRIOR TO RUNOFF LEAVING THE CONSTRUCTION SITE OR ENTERING SURFACE WATERS WHEN 5 OR MORE ACRES OF DISTURBED SOILS DRAIN TO A COMMON LOCATION, SINCE THE SITE IS WITHIN ONE MILE OF IMPAIRED WATER BODY. THE BASIN MUST PROVIDE 3,600 CUBIC FEET OF STORAGE BELOW THE OUTLET PER ACRE DRAINED. IF HYDRAULIC CALCULATIONS ARE AVAILABLE, THE TEMPORARY SEDIMENTATION BASIN MUST PROVIDE A STORAGE VOLUME EQUIVALENT TO THE 2-YEAR, 24-HOUR STORM, BUT IN NO CASE LESS THAN 1800 CUBIC FEET PER ACRE DRAINED. THE TEMPORARY SEDIMENTATION BASIN MUST BE CONSTRUCTED AND MADE OPERATIONAL CONCURRENT WITH THE START OF SOIL DISTURBANCE UP GRADIENT OF THE POND. THE TEMPORARY SEDIMENTATION BASIN SHALL BE DESIGNED TO PREVENT SHORT CIRCUITING. THE OUTFALL SHALL BE DESIGNED TO REMOVE FLOATABLE DEBRIS, ALLOW FOR COMPLETE DRAWDOWN OF THE POND FOR MAINTENANCE ACTIVITIES, AND HAVE ENERGY DISSIPATION. THE EMERGENCY SPILLWAY SHALL BE STABILIZED.
C. TEMPORARY SEDIMENTATION BASINS SHALL BE SITUATED OUTSIDE OF SURFACE WATERS AND ANY REQUIRED BUFFER ZONE, AND MUST BE DESIGNED TO AVOID DRAINING WETLANDS, UNLESS THE IMPACT IS IN COMPLIANCE WITH THE REQUIREMENTS OF THIS PERMIT.
D. EXCESSIVE SEDIMENT-LADEN WATER THAT IS NOT PROPERLY FILTERED WILL NOT BE PERMITTED TO DISCHARGE FROM SITE.

25. DEWATERING AND BASIN DRAINING
A. TURBID OR SEDIMENT-LADEN WATERS RELATED TO DEWATERING OR BASIN DRAINING SHALL BE DISCHARGED TO A TEMPORARY OR PERMANENT SEDIMENTATION BASIN ON THE PROJECT SITE UNLESS INFEASIBLE. THE TEMPORARY OR PERMANENT BASIN MAY DISCHARGE TO SURFACE WATERS IF THE BASIN WATER HAS BEEN VISUALLY CHECKED TO ENSURE ADEQUATE TREATMENT HAS BEEN OBTAINED IN THE BASIN AND THAT THE NUISANCE CONDITIONS WILL NOT RESULT FROM THE DISCHARGE. DISCHARGE POINTS SHALL BE ADEQUATELY PROTECTED FROM EROSION AND PROPER VELOCITY DISSIPATION PROVIDED.
B. ALL WATER FROM DEWATERING OR BASIN-DRAINING ACTIVITIES MUST BE DISCHARGED IN A MANNER THAT DOES NOT CAUSE NUISANCE CONDITIONS, EROSION IN THE RECEIVING CHANNELS OR ON DOWN SLOPE PROPERTIES, OR INUNDATION IN WETLANDS CAUSING SIGNIFICANT ADVERSE IMPACTS TO THE WETLAND.
C. IF FILTERS WITH BACKWASH WATERS ARE USED, THE BACKWASH WATER SHALL BE HAULED AWAY FOR DISPOSAL, RETURNED TO THE BEGINNING OF THE TREATMENT PROCESS, OR INCORPORATED INTO SITE IN A MANNER THAT DOES NOT CAUSE EROSION. BACKWASH WATER MAY BE DISCHARGED TO SANITARY SEWER IF PERMISSION IS GRANTED BY THE SANITARY SEWER AUTHORITY.

26. POLLUTION PREVENTION
A. BUILDING PRODUCTS THAT HAVE THE POTENTIAL TO LEACH POLLUTANTS MUST BE UNDER COVER TO PREVENT DISCHARGE OR PROTECTED BY AN EFFECTIVE MEANS DESIGNED TO MINIMIZE CONTACT WITH STORMWATER.
B. PESTICIDES, HERBICIDES, INSECTICIDES, FERTILIZERS, TREATMENT CHEMICALS, AND LANDSCAPE MATERIALS MUST BE UNDER COVER.
C. HAZARDOUS MATERIALS AND TOXIC WASTE CONTAINER MUST BE PROVIDED TO PREVENT VANDALISM.
D. SOLID WASTE MUST BE STORED, COLLECTED AND DISPOSED OF IN COMPLIANCE WITH MINN. R. CH 7035.
E. PORTABLE TOILETS MUST BE POSITIONED SO THAT THEY ARE SECURE AND WILL NOT BE TIPPED OR KNOCKED OVER. SANITARY WASTE MUST BE DISPOSED OF PROPERLY IN ACCORDANCE WITH MINN. R. CH 7041.
F. DISCHARGE OF SPILLED OR LEAKED CHEMICALS, INCLUDING FUEL, FROM ANY AREA WHERE CHEMICALS OR FUEL WILL BE LOADED OR UNLOADED SHALL BE PREVENTED USING DRIP PANS OR ABSORBENTS. SUPPLIES SHALL BE AVAILABLE AT ALL TIMES TO CLEAN UP DISCHARGED MATERIALS AND THAT AN APPROPRIATE DISPOSAL METHOD MUST BE AVAILABLE FOR RECOVERED SPILLED MATERIALS.

27. DESIGN CALCULATIONS
TEMPORARY & PERMANENT STORMWATER TREATMENT ARE DESIGNED TO MEET MPCA GENERAL & SPECIAL WATER REQUIREMENTS. CALCULATIONS ARE PART OF THE HYDROLOGY REPORT, WHICH IS TO BE CONSIDERED PART OF THE SWPPP DOCUMENTS. SEE HYDROLOGY REPORT FOR ADDITIONAL INFORMATION.

28. GENERAL STORMWATER DISCHARGE REQUIREMENTS
ALL REQUIREMENTS LISTED IN PART III OF THE PERMIT FOR DESIGN OF THE PERMANENT STORMWATER MANAGEMENT SYSTEM AND DISCHARGE HAVE BEEN INCLUDED IN THE PREPARATION OF THIS SWPPP. THESE INCLUDE BUT ARE NOT LIMITED TO:
A. THE EXPECTED AMOUNT, FREQUENCY, INTENSITY, AND DURATION PRECIPITATION.
B. THE NATURE OF STORMWATER RUNOFF AND RUN-ON AT THE SITE.
C. PEAK FLOW RATES AND STORMWATER VOLUMES TO MINIMIZE EROSION AT OUTLETS AND DOWNSTREAM CHANNEL AND STREAM BANK EROSION.
D. THE RANGE OF SOIL PARTICLE SIZES EXPECTED TO BE PRESENT ON THE SITE.

29. CONSTRUCTION OF FILTRATION BASINS
A. NO HEAVY TRAFFIC ON FILTRATION AREAS. CONSTRUCTION TO BE DONE WITH MINIMAL COMPACTION TO FILTRATION AREAS. IF COMPACTION IS ENCOUNTERED, BASIN SOILS MUST BE REMOVED & RELAID.
B. INFILTRATION SYSTEMS MUST NOT BE EXCAVATED TO FINAL GRADE UNTIL THE CONTRIBUTING DRAINAGE AREA HAD BEEN CONSTRUCTED AND FULLY STABILIZED UNLESS RIGOROUS EROSION PREVENTION AND SEDIMENT CONTROLS ARE PROVIDED(PART III.D.1.C.).
C. WHEN AN INFILTRATION SYSTEM IS EXCAVATED TO FINAL GRADE (OR WITHIN THREE (3) FEET OF FINAL GRADE), THE PERMITTEE(S) MUST EMPLOY RIGOROUS EROSION PREVENTION AND SEDIMENT CONTROLS (E.G., DIVERSION BERMS) TO KEEP SEDIMENT AND RUNOFF COMPLETELY AWAY FROM THE INFILTRATION AREA. THE AREA MUST BE STAKED OFF AND MARKED SO THAT HEAVY CONSTRUCTION VEHICLES OR EQUIPMENT WILL NOT COMPACT THE SOIL IN THE PROPOSED INFILTRATION AREA.
D. TO PREVENT CLOGGING OF THE INFILTRATION OR FILTRATION SYSTEM, THE PERMITTEE(S) MUST USE A PRETREATMENT DEVICE SUCH AS A VEGETATED FILTER STRIP, SMALL SEDIMENTATION BASIN, OR WATER QUALITY INLET (E.G., GRIT CHAMBER) TO SETTLE PARTICULATES BEFORE THE STORMWATER DISCHARGES INTO THE INFILTRATION OF FILTRATION SYSTEM.

30. POST CONSTRUCTION
THE WATER QUALITY VOLUME THAT MUST BE RETAINED ON SITE BY THE PROJECT'S PERMANENT STORMWATER MANAGEMENT SYSTEM DESCRIBED IN PART III.D. SHALL BE ONE (1) INCH OF RUNOFF FROM THE NEW IMPERVIOUS SURFACES CREATED BY THE PROJECT. SEE PART III.D.1. FOR MORE INFORMATION ON INFILTRATION DESIGN, PROHIBITIONS AND APPROPRIATE SITE CONDITIONS.

31. RESPONSIBILITIES
A. THE OWNER MUST IDENTIFY A CONTRACTOR WHO WILL OVERSEE THE SWPPP IMPLEMENTATION AND THE PERSON RESPONSIBLE FOR INSPECTION AND MAINTENANCE:
B. THE OWNER MUST IDENTIFY THE A PERSON WHO WILL BE RESPONSIBLE FOR LONG TERM OPERATIONS AND MAINTENANCE OF THE PERMANENT STORMWATER MANAGEMENT SYSTEM:

32. TRAINING REQEMENTS
THE PERMITTES(S) SHALL ENSURE THE FOLLOWING INDIVIDUALS IDENTIFIED IN THIS PART HAVE BEEN TRAINED IN ACCORDANCE WITH THIS PERMIT'S TRAINING REQUIREMENTS.
A. WHO MUST BE TRAINED:
1. INDIVIDUAL(S) PREPARING THE SWPPP FOR THE PROJECT
2. INDIVIDUAL(S) OVERSEEING IMPLEMENTATION OF, REVISING, AND AMENDING THE SWWP AND INDIVIDUALS(S) PERFORMING INSPECTIONS AS REQUIRED IN PART IV.E. ONE OF THESE INDIVDUAL(S) MUST BE AVAILABLE FOR AN ONSITE INSPECTION WITHIN 72 HOURS UPON REQUEST BY THE MPCA.
3. INDIVIDUAL(S) PERFORMING OR SUPERVISING THE INSTALLATION, MAINTENANCE AND REPAIR OF BMPS. AT LEAST ONE INDIVIDUAL ON A PROJECT MUST BE TRAINED IN THE JOB DUTIES.
B. TRAINING CONTENT:
1. THE CONTENT AND EXTENT OF TRAINING MUST BE COMMENSURATE WITH THE INDIVIDUAL'S JOB DUTIES AND RESPONSIBILITIES WITH REGARD TO ACTIVITIES COVERED UNDER THIS PERMIT FOR THE PROJECT. AT LEAST ONE INDIVIDUAL PRESENT ON THE PERMITTED PROJECT SITE (OR AVAILABLE TO THE PROJECT SITE IN 72 HOURS) MUST BE TRAINED IN THE JOB DUTIES DESCRIBED IN PART III.F.1.B. AND PARTIII.F.1.C.
C. THE PERMITTEE(S) SHALL ENSURE THAT THE INDIVIDUALS ARE TRAINED BY LOCAL, STATE, FEDERAL AGENCIES, PROFESSIONAL OR OTHER ENTITIES WITH EXPERTISE IN EROSION PREVENTION, SEDIMENT CONTROL, PERMANENT STORMWATER MANAGEMENT AND THE MINNESOTA NPDES/SDS CONSTRUCTION STORMWATER PERMIT. AN UPDATE REFESHER-TRAINING MUST BE ATTENDED EVERY THREE (3) YEARS STARTING THREE (3) YEARS FROM THE ISSUANCE DATE OF THIS PERMIT.

LIST OF CONTACTS

TILE	CONTACT	COMPANY	PHONE NUMBER
OWNER	DENNIS BACKES	BACKES COMPANIES	612-369-7750
PROJECT MANAGER	TODD MCLOUTH	LOUCKS	763-496-6742
SWPPP DESIGNER	ZACH WEBBER	LOUCKS	763-496-6753
CONTRACTOR	TBD		
SITE MANAGER	TBD		

* MPCA 24HR. HAZARDOUS SPILL HOTLINE: 651-649-5457 OF 80420798

EROSION CONTROL NOTES

1. ALL STREETS IN AND ADJACENT TO THE PROJECT SHALL REMAIN CLEAN AND PASSABLE AT ALL TIMES.
2. A STABILIZED CONSTRUCTION ENTRANCE WILL BE PLACED AT ALL ENTRANCES THAT LEAD TO THE PROJECT SITE IN ACCORDANCE WITH THE STORMWATER POLLUTION PREVENTION PLAN AND THE APPROVED DETAILS.
3. SEDIMENT CONTROLS MUST BE IN PLACE AND APPROVED BY THE ENGINEER BEFORE ANY PHASE OF CONSTRUCTION CAN BEGIN.
4. INLET PROTECTION WILL BE INSTALLED AT ALL CATCH BASINS WITHIN THE PROJECT AREA PER STANDARD DETAILS UNTIL THE SITE IS STABILIZED.
5. PIPE OUTLETS MUST BE PROVIDED WITH TEMPORARY OR PERMANENT ENERGY DISSIPATION WITHIN 24 HOURS AFTER CONNECTION TO SURFACE WATER.
6. STABILIZATION OF DISTURBED AREAS SHALL BE DONE BY PERMANENT TURF ESTABLISHMENT WHENEVER POSSIBLE.
7. IN THE EVENT THAT PERMANENT STABILIZATION CANNOT BE IMPLEMENTED WITHIN 7 DAYS AFTER CONSTRUCTION ACTIVITY IN THE DISTURBED AREA HAS CEASED, TEMPORARY STABILIZATION BMPS MUST BE SCHEDULED TO OCCUR WITHIN THAT 7 DAY TIME FRAME RAPID STABILIZATION METHOD 4 SHALL BE EMPLOYED WITHIN 200 FEET OF THE NORMAL WETTED PERIMETER OF ALL DISCHARGE POINTS WITHIN 24 HOURS.
8. ALL STOCKPILES MUST HAVE PERIMETER SEDIMENT CONTROL IMPLEMENTED AND MAINTAINED AT ALL TIMES. STOCKPILES SHALL RECEIVE TEMPORARY STABILIZATION IF UNWORKED FOR 7 DAYS.
9. CONCRETE SLURRY FROM REMOVAL OPERATIONS MUST BE VACUUMED UP IMMEDIATELY. NO CONCRETE WASHOUT SHALL COME IN CONTACT WITH THE GROUND AND MUST BE PROPERLY DISPOSED OF.
10. ADDITIONAL EROSION AND SEDIMENT CONTROL MAY BE ADDED DURING ANY PHASE OF CONSTRUCTION AS DIRECTED BY THE ENGINEER.
11. CONTRACTOR MUST SUBMIT A DEWATERING PLAN TO THE ENGINEER FOR APPROVAL 10 DAYS PRIOR TO ANY DEWATERING ON SITE. THE PLAN MUST INCLUDE A DEWATERING SYSTEM PRIOR TO DISCHARGING INTO RECEIVING WATER. THE DEWATERING PLAN MUST ENSURE THAT THE DISCHARGE WATER IS FREE OF SEDIMENT AND TURBID WATER IN ACCORDANCE WITH THE PROJECT SPEC. THE DEWATERING PLAN MUST ALSO INCLUDE A COMPONENT FOR ONSITE TESTING AND MONITORING OF TURBIDITY AND PH.
12. RAPID STABILIZATION #4 WITH CATEGORY 3N BLANKET ON SIDE SLOPES 3:1 OR STEEPER.
13. TEMPORARY OR PERMANENT STABILIZATION AND DOWN GRADIENT PERIMETER SEDIMENT CONTROL IS NEEDED ON ROW, CURB, AND GUTTER LINE.

PERMANENT STORMWATER MANAGEMENT

	INFILTRATION
	STORMWATER HARVEST AND REUSE
X	FILTRATION
X	WET SEDIMENTATION BASIN
	REGIONAL PONDING

RECEIVING WATERS

NAME OF WATER BODY	TYPE OF WATER BODY	SPECIAL WATER	IMAIRED WATER	TYPE OF SPECIAL WATER
CROW RIVER	RIVER	NO	YES	

*7 DAY STABILIZATION TIME FRAME REQUIRED

ESTIMATED QUANTITIES

DESCRIPTION	UNIT	QUANTITY
TEMPORARY ROCK CONSTRUCTION ENTRANCE	EA	3
SILT FENCE (STANDARD)	LF	±11,590
STAGE 2 SILT FENCE (STANDARD)	LF	±3,355
INLET PROTECTION	EA	42
WOODFIBER BLANKET	SY	.
CONCRETE WASHOUT	EA	.
BIOROLL	LF	±15,465

UNIVERSITY OF MINNESOTA
Zachary Webber
Design of Construction SWPPP (May 31 2018)

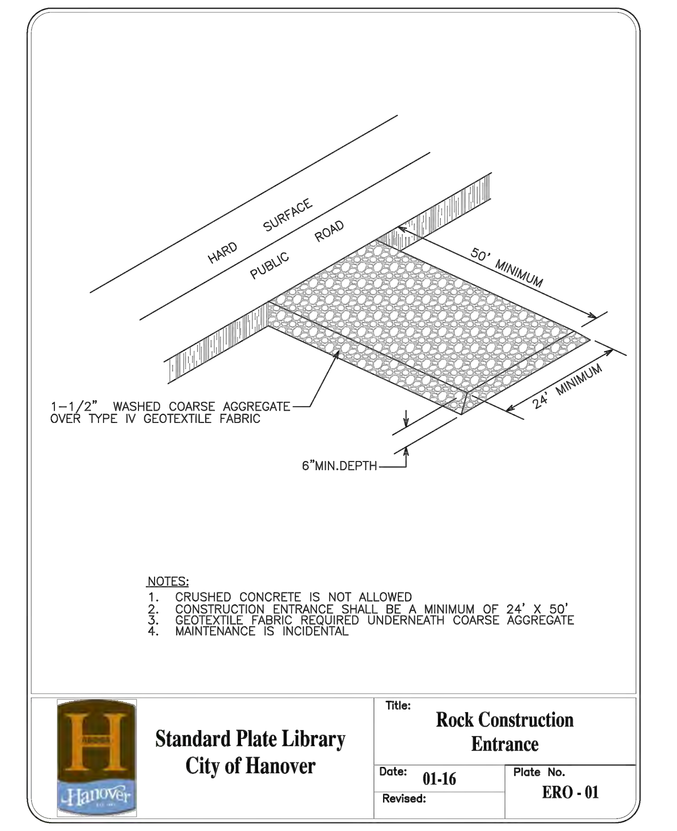

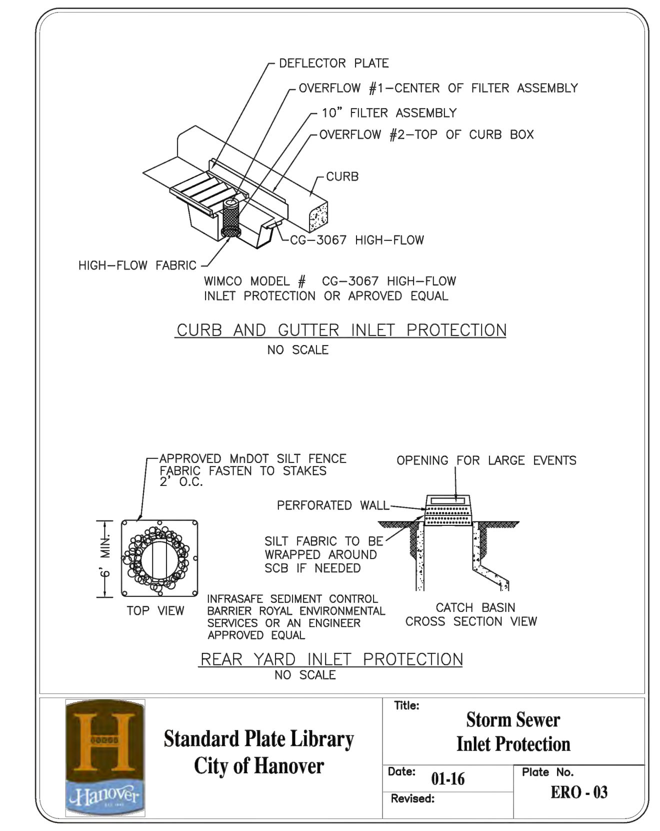

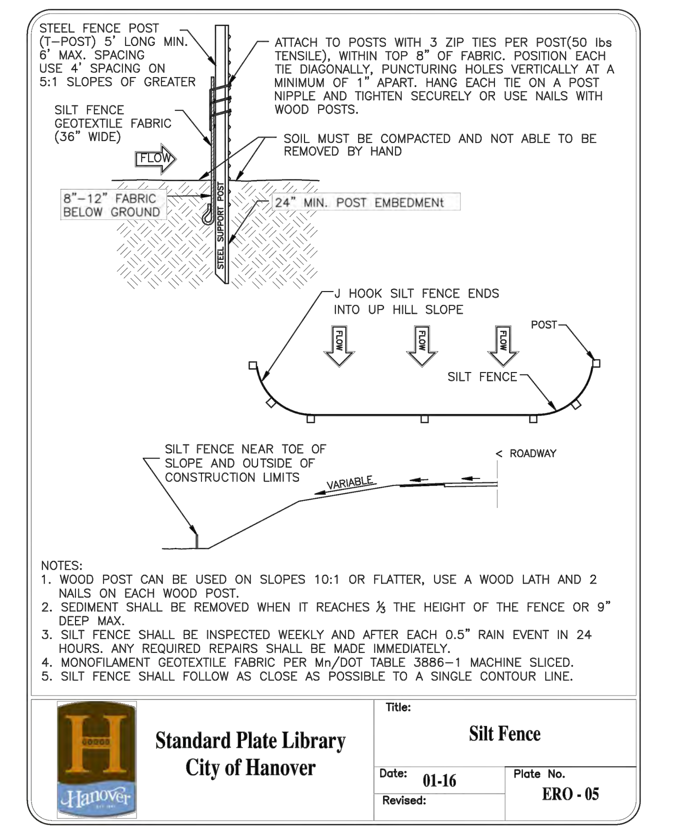

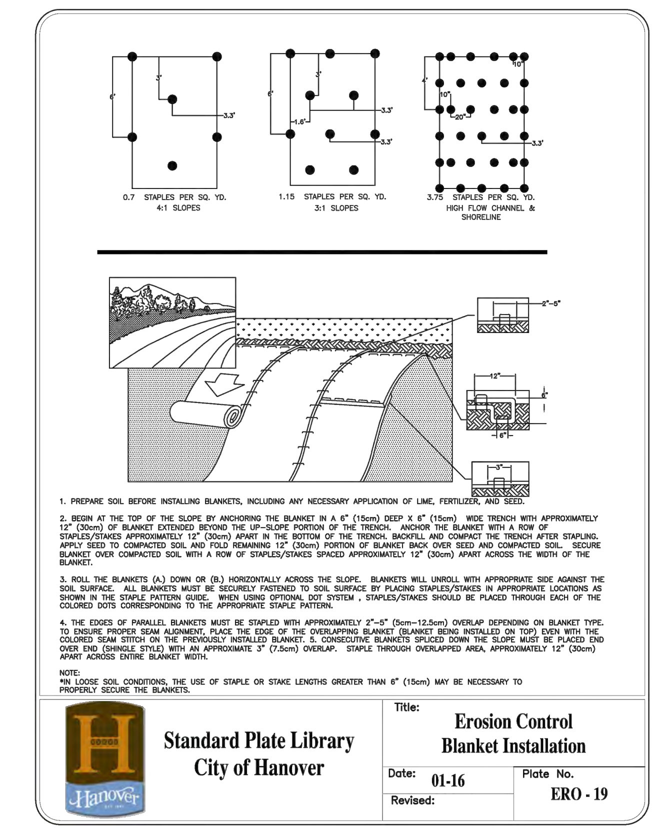

SPECIAL AND IMPAIRED WATERS MAP

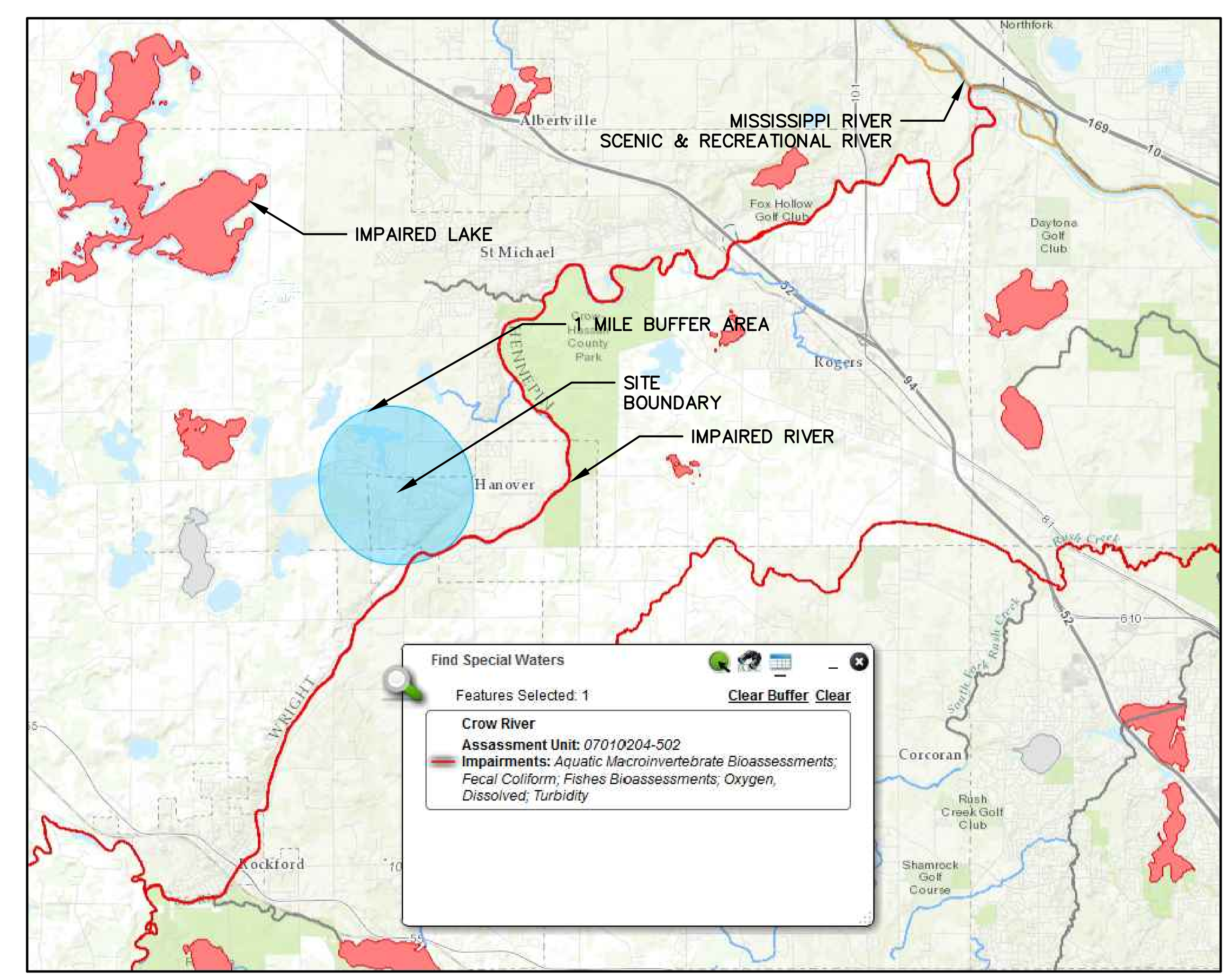

CROW RIVER HEIGHTS WEST FUTURE ADD.
HANOVER, MN

BACKES COMPANIES
11413 ASHBURY CIRCLE N.
CHAMPLIN, MN 55316
PHONE: (612) 369-7750
FAX (612) 566-1525

LOUCKS
PLANNING
CIVIL ENGINEERING
LAND SURVEYING
LANDSCAPE ARCHITECTURE
ENVIRONMENTAL
7200 Hemlock Lane, Suite 300
Maple Grove, MN 55369
763.424.5505
www.loucksinc.com

CADD QUALIFICATION
CADD files prepared by the Consultant for this project are instruments of the Consultant professional services for use solely with respect to this project. These CADD files shall not be used on other projects, for additions to this project, or for completion of this project by others without written approval by the Consultant. With the Consultant's approval, others may be permitted to obtain copies of the CADD drawing files for information and reference only. All intentional or unintentional revisions, additions, or deletions to these CADD files shall be made at the full risk of that party making such revisions, additions or deletions and that party shall hold harmless and indemnify the Consultant from any & all responsibilities, claims, and liabilities.

SUBMITTAL/REVISIONS

04/20/18 CITY SUBMITTAL

PROFESSIONAL SIGNATURE

I hereby certify that this plan, specification or report was prepared by me or under my direct supervision and that I am a duly Licensed Professional Engineer under the laws of the State of Minnesota.

PRELIMINARY

Todd W. McLouth - PE
License No. 20383
Date

QUALITY CONTROL

Loucks Project No.	16101A
Project Lead	TWM
Drawn By	ZHW
Checked By	TWM
Review Date	04/02/18

SHEET INDEX

C0-1	COVER SHEET
C1-1	EXISTING CONDITIONS
C1-2	PRELIMINARY PLAT
C2-0 - C2-2	SITE PLAN
C3-0 - C3-2	GRADING PLAN
C3-3 - C3-5	SWPPP PLAN & NOTES
C4-0 - C4-2	UTILITY PLAN
C8-1 - C8-2	DETAILS
L0-1 - L0-3	TREE PRESERVATION
L0-4	TREE INVENTORY
L1-1 - L1-2	LANDSCAPE PLANS
L2-1	LANDSCAPE DETAILS

SWPPP NOTES
C3-5

Plotted: 04 /19 / 2018 9:37 AM W:\2016\16101A\CADD DATA\CIVIL_dwg Sheet Files\C3-3 SWPPP

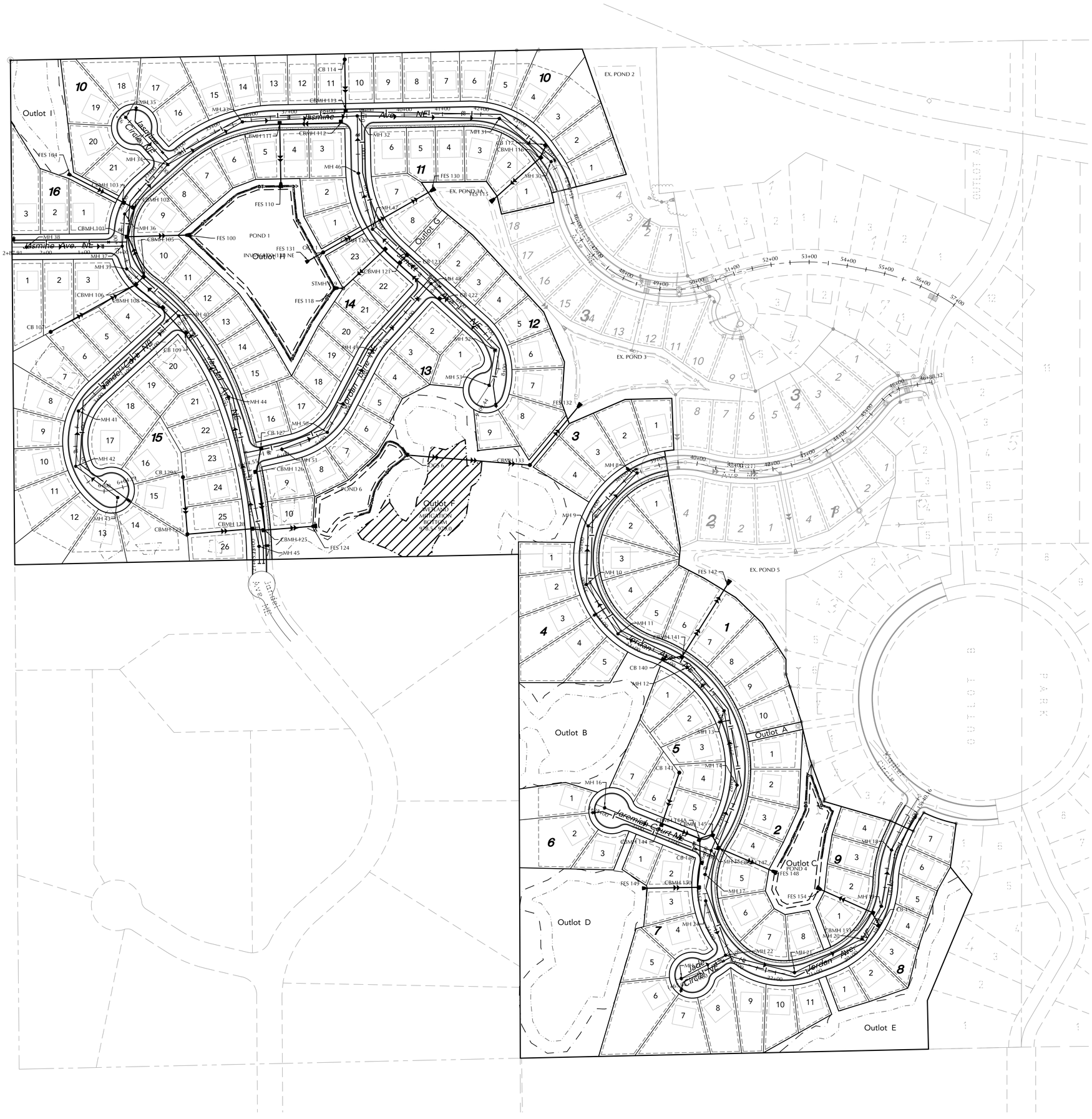

N

0 100 200

SCALE IN FEET

EXISTING	CIVIL LEGEND	PROPOSED
	SANITARY MANHOLE	
	STORM MANHOLE	
	CATCH BASIN	
	CULVERT	
	HYDRANT	
	GATEVALVE	
	POST INDICATOR VALVE	
	LIGHT POLE	
	POWER POLE	
	SIGN	
	BENCHMARK	
	SOIL BORINGS	
	WATER MANHOLE	
	TELEPHONE MANHOLE	
	UTILITY MANHOLE	
	ELECTRIC MANHOLE	
	WATER SERVICE	
	SANITARY SERVICE	
	HANDICAP PARKING	
	DIRECTION OF FLOW	
	SPOT ELEVATION	
	CONTOURS	
	SANITARY SEWER	
	STORM SEWER	
	WATERMAIN	
	FORCEMAIN	
	DRAINTILE	
	SILT FENCE	
	CURB & GUTTER	
	RETAINING WALL	
	TREELINE	
	EASEMENT LINE	
	SETBACK LINE	
	FENCE LINE	
	UNDERGROUND TELE	
	UNDERGROUND GAS	
	OVERHEAD UTILITY	

CROW RIVER HEIGHTS WEST FUTURE ADD.

HANOVER, MN

BACKES COMPANIES
11413 ASHBURY CIRCLE N.
CHAMPLIN, MN 55316
PHONE: (612) 369-7750
FAX (612) 566-1525

LOUCKS
PLANNING
CIVIL ENGINEERING
LAND SURVEYING
LANDSCAPE ARCHITECTURE
ENVIRONMENTAL
7200 Hemlock Lane, Suite 300
Maple Grove, MN 55369
763.424.5505
www.loucksinc.com

CADD QUALIFICATION

CADD files prepared by the Consultant for this project are instruments of the Consultant professional services for use solely with respect to this project. These CADD files shall not be used on other projects, for additions to this project, or for completion of this project by others without written approval by the Consultant. Only hard copies (paper copies) of the CADD drawing files are permitted to obtain copies of the CADD drawing files for information and reference only. All intentional or unintentional revisions, additions, or deletions to these CADD files shall be made at the full risk of that party making such revisions, additions or deletions and that party shall hold harmless and indemnify the Consultant from any & all responsibilities, claims, and liabilities.

SUBMITTAL/REVISIONS

04/20/18 CITY SUBMITTAL

PROFESSIONAL SIGNATURE

I hereby certify that this plan, specification or report was prepared by me or under my direct supervision and that I am a duly Licensed Professional Engineer under the laws of the State of Minnesota.

PRELIMINARY

License No. 20383
Date

QUALITY CONTROL

Loucks Project No.	16101A
Project Lead	TWM
Drawn By	ZHW
Checked By	TWM
Review Date	04/02/18

SHEET INDEX

C0-1	COVER SHEET
C1-1	EXISTING CONDITIONS
C1-2	PRELIMINARY PLAT
C2-0 - C2-2	SITE PLAN
C3-0 - C3-2	GRADING PLAN
C3-3 - C3-5	SWPPP PLAN & NOTES
C4-0 - C4-2	UTILITY PLAN
C8-1 - C8-2	DETAILS
L0-1 - L0-3	TREE PRESERVATION
L0-4	TREE INVENTORY
L1-1 - L1-2	LANDSCAPE PLANS
L2-1	LANDSCAPE DETAILS

CALL BEFORE YOU DIG!

Gopher State One Call

TWIN CITY AREA: 651-454-0002
TOLL FREE: 1-800-252-1166

WARNING:

THE CONTRACTOR SHALL BE RESPONSIBLE FOR CALLING FOR LOCATIONS OF ALL EXISTING UTILITIES. THEY SHALL COOPERATE WITH ALL UTILITY COMPANIES IN MAINTAINING THEIR SERVICE AND / OR RELOCATION OF LINES.

THE CONTRACTOR SHALL CONTACT GOPHER STATE ONE CALL AT 651-454-0002 AT LEAST 48 HOURS IN ADVANCE FOR THE LOCATIONS OF ALL UNDERGROUND WIRES, CABLES, CONDUITS, PIPES, MANHOLES, VALVES OR OTHER BURIED STRUCTURES BEFORE DIGGING. THE CONTRACTOR SHALL REPAIR OR REPLACE THE ABOVE WHEN DAMAGED DURING CONSTRUCTION AT NO COST TO THE OWNER.

OVERALL UTILITY PLAN

C4-0

Plotted: 04 /19 / 2018 9:38 AM W:\2016\16101A\CADD DATA\CIVIL_dwg Sheet Files\C4-1 UTILITY PLAN

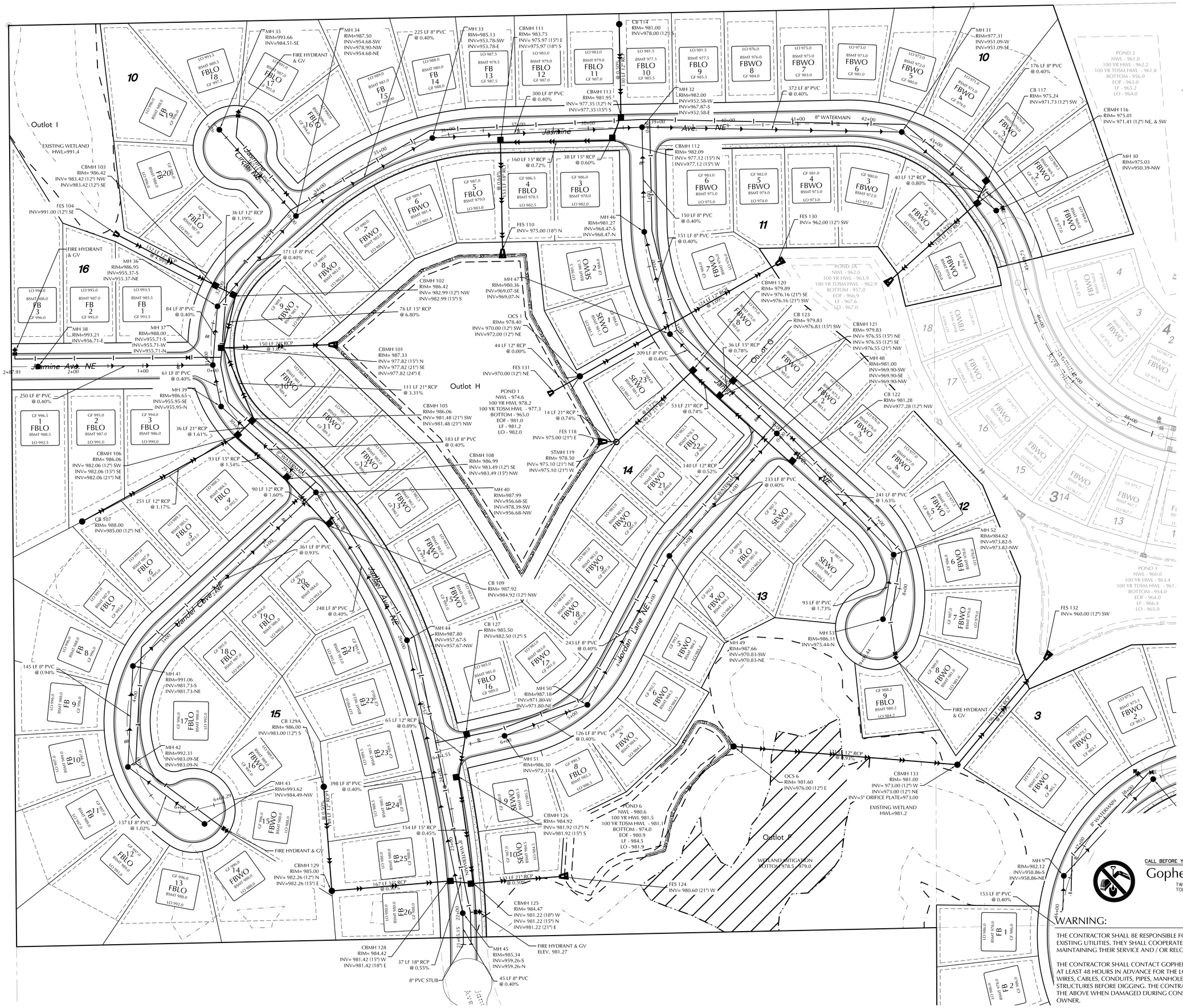

SCALE IN FEET: 0 50 100

EXISTING	CIVIL LEGEND	PROPOSED
	SANITARY MANHOLE	
	STORM MANHOLE	
	CATCH BASIN	
	CULVERT	
	HYDRANT	
	GATEVALVE	
	POST INDICATOR VALVE	
	LIGHT POLE	
	POWER POLE	
	SIGN	
	BENCHMARK	
	SOIL BORINGS	
	WATER MANHOLE	
	TELEPHONE MANHOLE	
	UTILITY MANHOLE	
	ELECTRIC MANHOLE	
	WATER SERVICE	
	SANITARY SERVICE	
	HANDICAP PARKING	
	DIRECTION OF FLOW	
	SPOT ELEVATION	
	CONTOURS	
	SANITARY SEWER	
	STORM SEWER	
	WATERMAIN	
	FORCEMAIN	
	DRAINTILE	
	SILT FENCE	
	CURB & GUTTER	
	RETAINING WALL	
	TREELINE	
	EASEMENT LINE	
	SETBACK LINE	
	FENCE LINE	
	UNDERGROUND TELE	
	UNDERGROUND GAS	
	OVERHEAD UTILITY	

CALL BEFORE YOU DIG!

Gopher State One Call

TWIN CITY AREA: 651-454-0002
TOLL FREE: 1-800-252-1166

WARNING:

THE CONTRACTOR SHALL BE RESPONSIBLE FOR CALLING FOR LOCATIONS OF ALL EXISTING UTILITIES. THEY SHALL COOPERATE WITH ALL UTILITY COMPANIES IN MAINTAINING THEIR SERVICE AND / OR RELOCATION OF LINES.

THE CONTRACTOR SHALL CONTACT GOPHER STATE ONE CALL AT 651-454-0002 AT LEAST 48 HOURS IN ADVANCE FOR THE LOCATIONS OF ALL UNDERGROUND WIRES, CABLES, CONDUITS, PIPES, MANHOLES, VALVES OR OTHER BURIED STRUCTURES BEFORE DIGGING. THE CONTRACTOR SHALL REPAIR OR REPLACE THE ABOVE WHEN DAMAGED DURING CONSTRUCTION AT NO COST TO THE OWNER.

CROW RIVER HEIGHTS WEST FUTURE ADD.

HANOVER, MN

BACKES COMPANIES
11413 ASHBURY CIRCLE N.
CHAMPLIN, MN 55316
PHONE: (612) 369-7750
FAX (612) 566-1525

LOUCKS
PLANNING
CIVIL ENGINEERING
LAND SURVEYING
LANDSCAPE ARCHITECTURE
ENVIRONMENTAL
7200 Hemlock Lane, Suite 300
Maple Grove, MN 55369
763.424.5505
www.loucksinc.com

CADD QUALIFICATION

CADD files prepared by the Consultant for this project are instruments of the Consultant's professional services for use solely with respect to this project. These CADD files shall not be used on other projects, for additions to this project, or for completion of this project by others without written approval by the Consultant. With the Consultant's approval, others may be permitted to obtain copies of the CADD drawing files for information and reference only. All intentional or unintentional revisions, additions, or deletions to these CADD files shall be made at the full risk of that party making such revisions, additions or deletions and that party shall hold harmless and indemnify the Consultant from any & all responsibilities, claims, and liabilities.

SUBMITTAL/REVISIONS

04/20/18	CITY SUBMITTAL

PROFESSIONAL SIGNATURE

I hereby certify that this plan, specification, or report was prepared by me or under my direct supervision and that I am a duly Licensed Professional Engineer under the laws of the State of Minnesota.

PRELIMINARY

Licensed Name: Tim McLouth - PE
Date: License #: 20383

QUALITY CONTROL

Loucks Project No.	16101A
Project Lead	TWM
Drawn By	ZHW
Checked By	TWM
Review Date	04/02/18

SHEET INDEX

C0-1	COVER SHEET
C1-1	EXISTING CONDITIONS
C1-2	PRELIMINARY PLAT
C2-0 - C2-2	SITE PLAN
C3-0 - C3-2	GRADING PLAN
C3-3 - C3-5	SWPPP PLAN & NOTES
C4-0 - C4-2	UTILITY PLAN
C8-1 - C8-2	DETAILS
L0-1 - L0-3	TREE PRESERVATION
L0-4	TREE INVENTORY
L1-1 - L1-2	LANDSCAPE PLANS
L2-1	LANDSCAPE DETAILS

NORTH UTILITY PLAN

C4-1

Plotted: 04/19/2018 9:38 AM W:\2016\16101A\CADD DATA\CIVIL dwg Sheet Files\C4-1 UTILITY PLAN

EXISTING	CIVIL LEGEND	PROPOSED
	SANITARY MANHOLE	
	STORM MANHOLE	
	CATCH BASIN	
	CULVERT	
	HYDRANT	
	GATEVALVE	
	POST INDICATOR VALVE	
	LIGHT POLE	
	POWER POLE	
	SIGN	
	BENCHMARK	
	SOIL BORINGS	
	WATER MANHOLE	
	TELEPHONE MANHOLE	
	UTILITY MANHOLE	
	ELECTRIC MANHOLE	
	WATER SERVICE	
	SANITARY SERVICE	
	HANDICAP PARKING	
	DIRECTION OF FLOW	
	SPOT ELEVATION	
	CONTOURS	
	SANITARY SEWER	
	STORM SEWER	
	WATERMAIN	
	FORCEMAIN	
	DRAINTILE	
	SILT FENCE	
	CURB & GUTTER	
	RETAINING WALL	
	TREELINE	
	EASEMENT LINE	
	SETBACK LINE	
	FENCE LINE	
	UNDERGROUND TELE	
	UNDERGROUND GAS	
	OVERHEAD UTILITY	

0 50 100
SCALE IN FEET

CALL BEFORE YOU DIG!
Gopher State One Call
TWIN CITY AREA: 651-454-0002
TOLL FREE: 1-800-252-1166

WARNING:

THE CONTRACTOR SHALL BE RESPONSIBLE FOR CALLING FOR LOCATIONS OF ALL EXISTING UTILITIES. THEY SHALL COOPERATE WITH ALL UTILITY COMPANIES IN MAINTAINING THEIR SERVICE AND / OR RELOCATION OF LINES.

THE CONTRACTOR SHALL CONTACT GOPHER STATE ONE CALL AT 651-454-0002 AT LEAST 48 HOURS IN ADVANCE FOR THE LOCATIONS OF ALL UNDERGROUND WIRES, CABLES, CONDUITS, PIPES, MANHOLES, VALVES OR OTHER BURIED STRUCTURES BEFORE DIGGING. THE CONTRACTOR SHALL REPAIR OR REPLACE THE ABOVE WHEN DAMAGED DURING CONSTRUCTION AT NO COST TO THE OWNER.

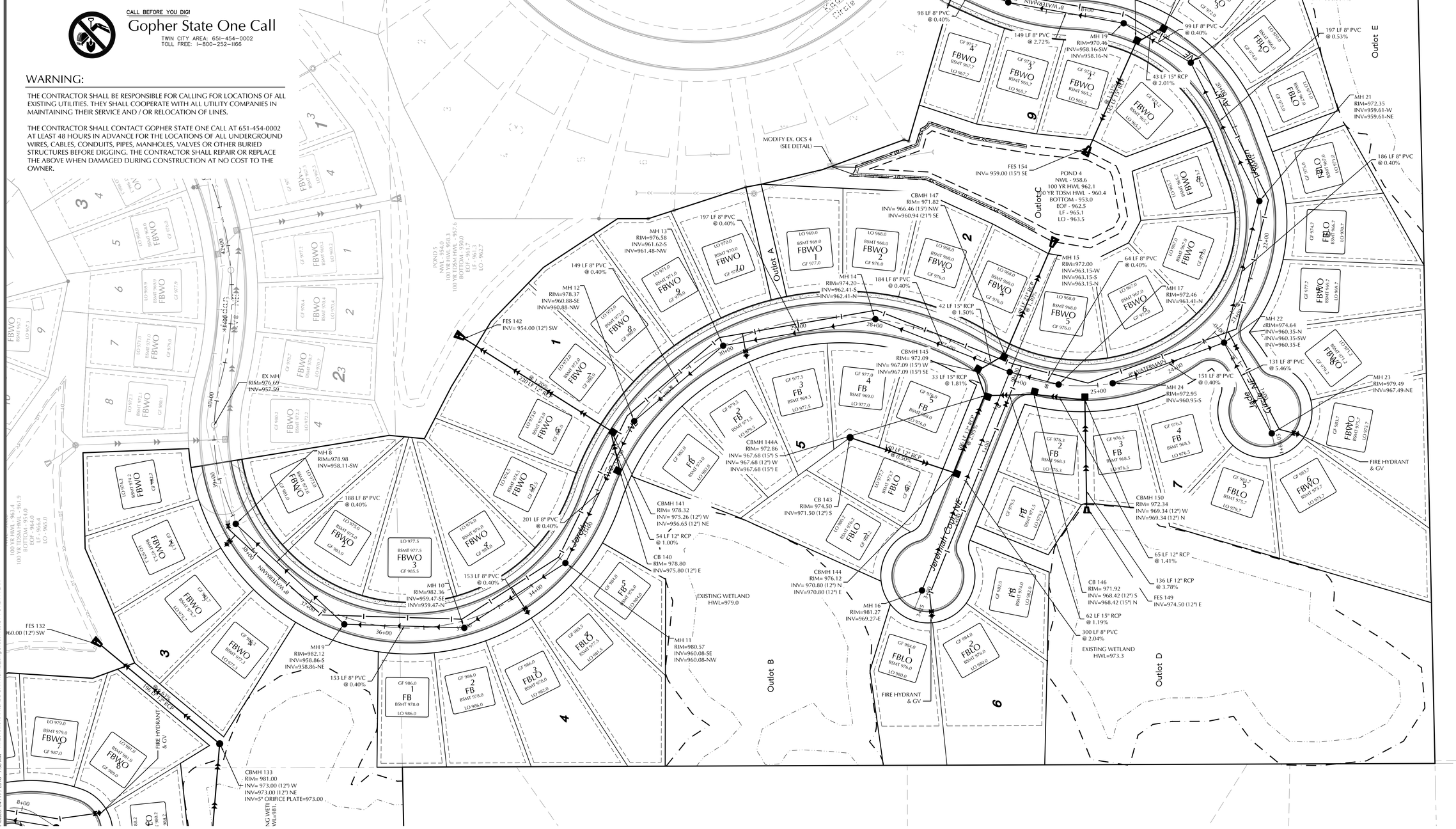

CROW RIVER HEIGHTS WEST FUTURE ADD.
HANOVER, MN

BACKES COMPANIES
11413 ASHBURY CIRCLE N.
CHAMPLIN, MN 55316
PHONE: (612) 369-7750
FAX (612) 566-1525

LOUCKS
PLANNING
CIVIL ENGINEERING
LAND SURVEYING
LANDSCAPE ARCHITECTURE
ENVIRONMENTAL
7200 Hemlock Lane, Suite 300
Maple Grove, MN 55369
763.424.5505
www.loucksinc.com

CADD QUALIFICATION

CADD files prepared by the Consultant for this project are instruments of the Consultant professional services for use solely with respect to this project. These CADD files shall not be used on other projects, for additions to this project, or for completion of this project by others without written approval by the Consultant. With the Consultant's approval, others may be permitted to obtain copies of the CADD drawing files for information and reference only. All intentional or unintentional revisions, additions, or deletions to these CADD files shall be made at the full risk of that party making such revisions, additions or deletions and that party shall hold harmless and indemnify the Consultant from any & all responsibilities, claims, and liabilities.

SUBMITTAL/REVISIONS

04/20/18	CITY SUBMITTAL

PROFESSIONAL SIGNATURE

I hereby certify that this plan, specification, or report was prepared by me or under my direct supervision and that I am a duly Licensed Professional Engineer under the laws of the State of Minnesota.

PRELIMINARY

License Number	20383
Date	

QUALITY CONTROL

Loucks Project No.	16101A
Project Lead	TWM
Drawn By	ZHW
Checked By	TWM
Review Date	04/02/18

SHEET INDEX

C0-1	COVER SHEET
C1-1	EXISTING CONDITIONS
C1-2	PRELIMINARY PLAT
C2-0 - C2-2	SITE PLAN
C3-0 - C3-2	GRADING PLAN
C3-3 - C3-5	SWPPP PLAN & NOTES
C4-0 - C4-2	UTILITY PLAN
C8-1 - C8-2	DETAILS
L0-1 - L0-3	TREE PRESERVATION
L0-4	TREE INVENTORY
L1-1 - L1-2	LANDSCAPE PLANS
L2-1	LANDSCAPE DETAILS

SOUTH UTILITY PLAN

C4-2

Plotted: 04/19/2018 9:38 AM W:\2016\16101A\CADD DATA\CIVIL\ dwg Sheet Files\C4-1 UTILITY PLAN

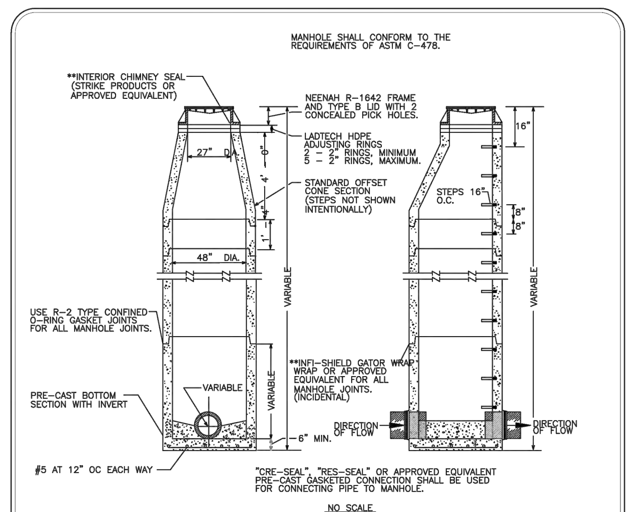

NOTES:
1. ALL CONNECTIONS TO EXISTING STRUCTURES SHALL BE CORE DRILLED
2. MANHOLE STEPS SHALL BE CAST IN ALUMINUM OR MA INDUSTRY WITH VINYL COATING OR APPROVED EQUIVALENT AND SHALL BE LOCATED ON THE DOWN STREAM SIDE OF MANHOLE
3. STEPS SHALL BE PLACED SO THAT THE OFFSET VERTICAL PORTION OF THE CONE IS FACING DOWN STREAM
4. MANHOLE COVERS SHALL BE CAST WITH THE WORDS "SANITARY SEWER"
5. THE INITIAL & FINAL RAISING OF CASTINGS SHALL BE CONSIDERED INCLUDED IN THE UNIT PRICE BID FOR CASTING THE ASSEMBLY
6. MAXIMUM DEPTH FROM TOP OF CASTING TO FIRST STEP SHALL NOT BE MORE THAN 16"
7. STEPS SHALL ALIGN WITH THE OPENING TO PROVIDE ACCESS TO THE MANHOLES
8. ALL SANITARY MANHOLES SHALL BE SEALED WITH INTERNAL MOLDED POLYMER SHIELD, SUCH AS "I/I BARRIER" AS MANUFACTURED BY STRIKE PRODUCTS APPROVED EQUIVALENT

Standard Plate Library
City of Hanover
Title: Standard Manhole for Sanitary Sewer
Date: 01-16 | Plate No. SAN - 01
Revised:

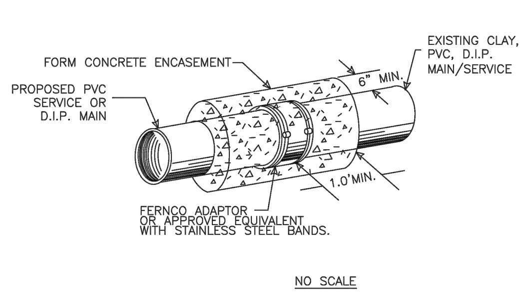

NOTES:
WRAP ADAPTER WITH POLYETHYLENE PRIOR TO ENCASEMENT WITH CONCRETE

Standard Plate Library
City of Hanover
Title: Sanitary Sewer Main/Service Connection Detail
Date: 01-16 | Plate No. SAN - 05
Revised:

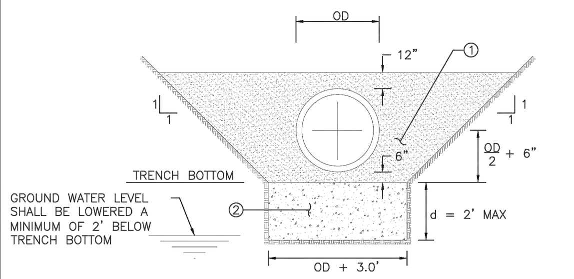

1. GRANULAR PIPE BEDDING MATERIAL (MNDOT SPEC 3149.2F) (INCIDENTAL)
2. 1½" CLEAR AGGREGATE BEDDING. TO BE USED ONLY IN AREAS AS DIRECTED BY ENGINEER. (NO PAYMENT WILL BE MADE WITHOUT PRIOR APPROVAL FROM THE ENGINEER)

Standard Plate Library
City of Hanover
Title: PVC Pipe Bedding Detail
Date: 01-16 | Plate No. SAN - 06
Revised:

NOTES:
1. Whenever service lines are installed in areas of high groundwater the last 5', as a minimum, are to be installed as a 45° riser to extend service line above groundwater level.
2. Metal fence post at end of water and sanitary service, 4' above grade. Water fence post to be painted blue. Sanitary fence post to be painted green.
3. Cleanouts are required every 100' on sanitary sewer services.

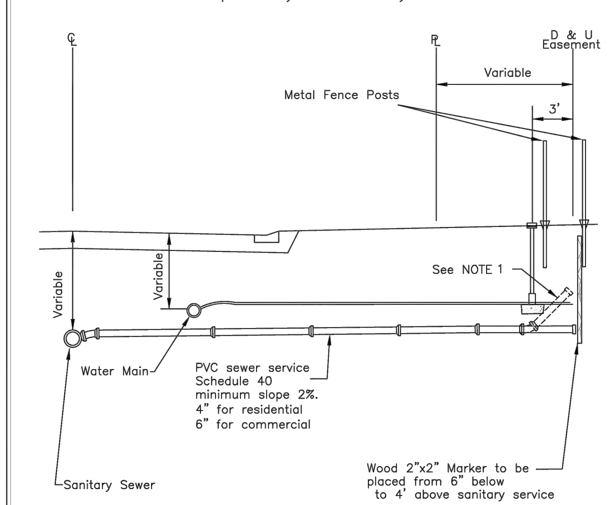

Standard Plate Library
City of Hanover
Title: Sewer Service Connections
Date: 01-16 | Plate No. SAN - 10
Revised:

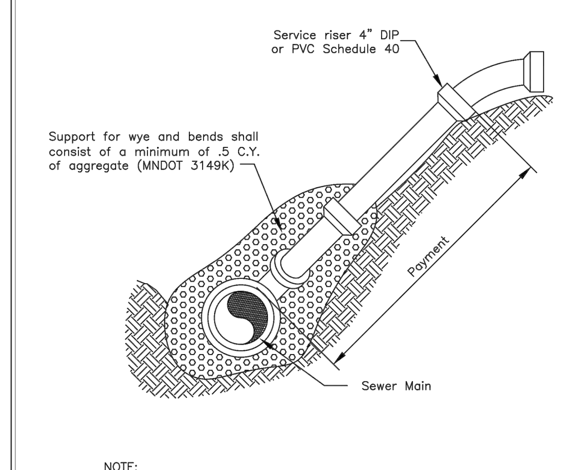

NOTE:
Where the sanitary main is deeper than 14.5', service risers shall be required.

Standard Plate Library
City of Hanover
Title: Service Riser
Date: 01-16 | Plate No. SAN - 11
Revised:

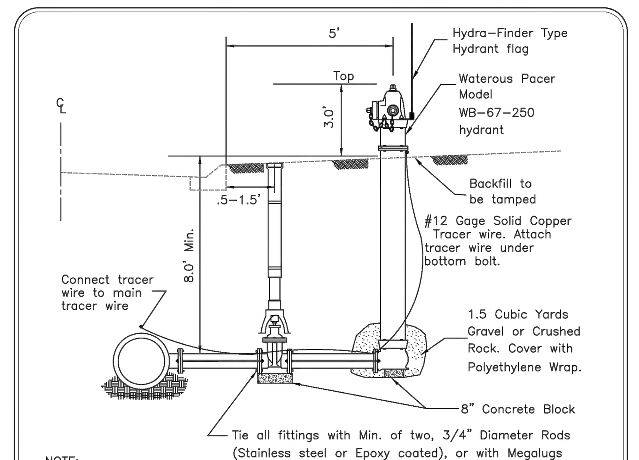

NOTE:
1. Factory installed plugs required whenever hydrants are installed in areas with high groundwater level, as determined by dewatering requirements and the City Engineer. The main nozzle shall be painted blue for all hydrants with plugged drain holes.
2. All ductile iron watermain fittings shall be fusion bonded epoxy coated.
3. Hydrants shall be marked with stainless steel tag from factory.
4. Contractor shall supply two hydrant flags, one to be installed on the hydrant and the second delivered to the Hanover Maintenance Facility.
5. All hydrant leads are to be constructed with Polywrapped DIP, Class 52.
6. All watermain bolts shall be ASTM F593 Type 316 Stainless Steel or approved equal.

Standard Plate Library
City of Hanover
Title: Hydrant Detail
Date: 01-16 | Plate No. WAT - 01
Revised:

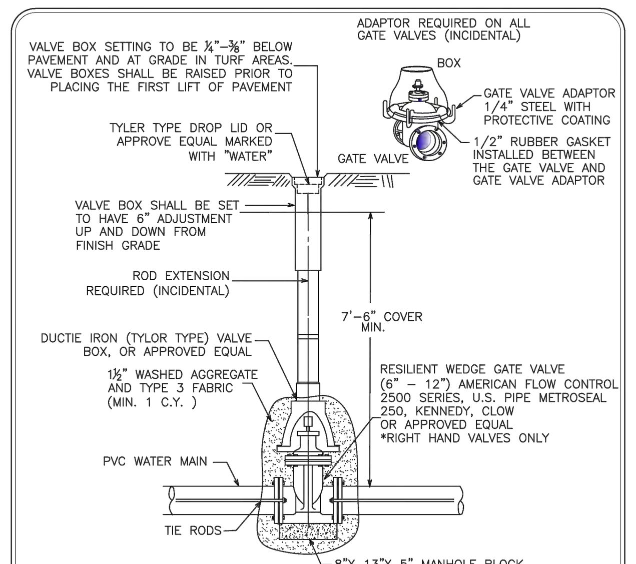

NOTES:
1. GATE VALVES SHOULD BE USED ON 6" THROUGH 12" WATERMAIN.
2. VALVE BOX INSERTS ARE NOT ALLOWED UNLESS APPROVED BY THE ENGINEER.
3. VALVE BOXES SHALL BE INSTALLED PLUMB AND SHALL ALLOW A 4" P.V.C. PIPE TO PASS ENTIRELY OVER THE GATE VALVE NUT AFTER INSTALLATION IS COMPLETE.
4. ALL VALVES SHALL BE TIED WITH 3/4" THREADED TIE RODS TO THE MAIN. MEGA LUGS MAY BE USED IN LIEU OF TIE RODS.
5. THE HEIGHT OF THE CAST IRON OR DUCTILE IRON ADJUSTMENT RING IS DETERMINED BY THE THICKNESS OF THE WEAR COURSE.
6. CAST IRON OR DUCTILE IRON ADJUSTMENT RINGS TO BE INSTALLED AS PER MANUFACTURE'S RECOMMENDATION.
7. THE INITIAL & FINAL RAISING OF VALVE BOXES SHALL BE CONSIDERED INCIDENTAL TO THE PROJECT.

Standard Plate Library
City of Hanover
Title: Gate Valve and Box Installation
Date: 01-16 | Plate No. WAT - 02
Revised:

NOTES:
1. All new curb boxes must have riser rods adjustable up and down for 7½' of cover. When an existing curb box is on a construction or reconstruction project, riser rods shall be installed to all curb boxes on that project.
2. Placement of curb stop and box on private streets shall be 10' back of curb with no copper stubbed past the curb stop and box.
3. Copper is to be one piece, no joints, couplings, etc., allowed from main to curb stop.
4. Water service and sanitary sewer service shall have a 3' horizontal separation.
5. Curb boxes located in driveways or parking lots shall be covered with a ford A-1 meter box cover.
6. Metal fence post at end of water and sanitary service, 4' above grade Water fence post to be painted blue. Sanitary fence post to be painted green.
7. Copper size (C.T.S.) polyethylene service tubing sized per plan.
8. HDPE is to be one piece, no joints, couplings, etc. allowed from main to stop. Backfill material shall be granualar bedding material, free of stones.
9. Tracer wire, #10 AWG solid copper wire with U.S.E. rated insulation.

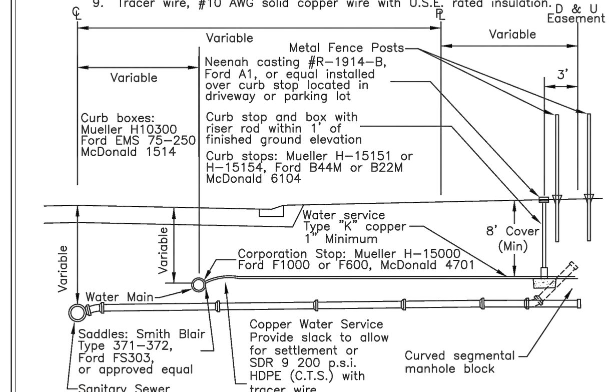

Standard Plate Library
City of Hanover
Title: Water Service Connections
Date: 01-16 | Plate No. WAT - 04
Revised:

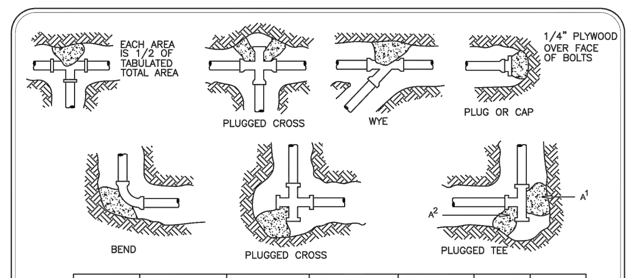

NOMINAL FITTING SIZE, INCHES	TEE, WYE, PLUG OR CAP	90° BEND, PLUGGED CROSS	TEE PLUGGED ON RUN A1	TEE PLUGGED ON RUN A2	45° BEND	22-1/2° BEND	11-1/4° BEND
4	1.0	1.4	1.9	1.4	1.0	–	–
6	2.1	3.0	4.3	3.0	1.6	1.0	–
8	3.8	5.3	7.6	5.4	2.9	1.5	1.0
10	5.9	8.4	11.8	8.4	4.6	2.6	1.2
12	8.5	12.0	17.0	12.0	6.6	3.4	1.7
14	11.5	16.3	23.0	16.3	8.9	4.6	2.3
16	15.0	21.3	30.0	21.3	11.6	6.0	3.0
18	19.0	27.0	38.0	27.0	14.6	7.6	3.8
20	23.5	33.3	47.0	33.3	18.1	9.4	4.7
24	34.0	48.0	68.0	48.0	26.2	13.6	6.8

NOTES:
1. CONCRETE THRUST BLOCKING TO BE POURED AGAINST UNDISTURBED EARTH.
2. KEEP CONCRETE CLEAR OF JOINT AND ACCESSORIES.
3. REQUIRED BEARING AREAS AT FITTING SHALL BE AS NOTED ABOVE, UNLESS INDICATED OTHERWISE.
4. BEARING AREAS AND SPECIAL BLOCKING DETAILS SHOWN ON THE PLANS TAKE PRECEDENCE OVER BEARING AREAS AND BLOCKING DETAILS SHOWN ON THIS STANDARD PLATE.
5. ABOVE BEARING AREAS BASED ON TEST PRESSURES OF 150 PSI AND AN ALLOWABLE SOIL BEARING STRESS OF 2000 LBS. PER SQUARE FOOT. TO COMPUTE BEARING AREAS FOR DIFFERENT TEST PRESSURES AND SOIL BEARING STRESSES, USE THE FOLLOWING EQUATION: BEARING AREA = (TEST PRESSURE/150) X (2000/SOIL BEARING STRESS) X (TABLE VALUE).

Standard Plate Library
City of Hanover
Title: Poured Concrete Thrust Blocking for Watermain
Date: 01-16 | Plate No. WAT - 05
Revised:

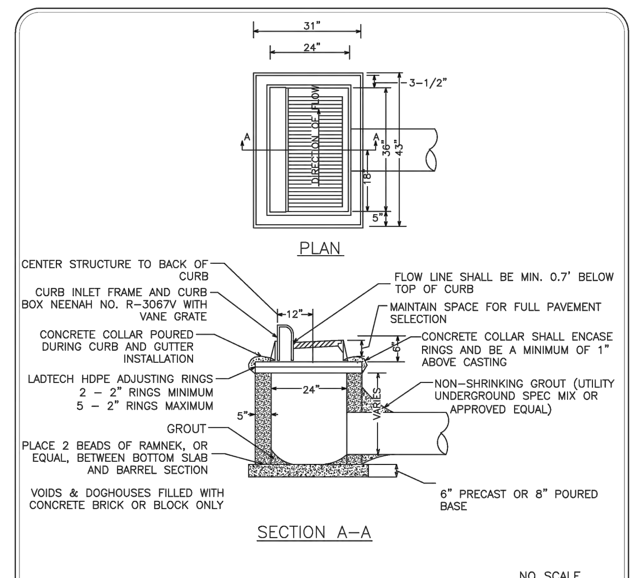

NOTES:
1. REINFORCING TO CONSIST OF #4 BARS @ 8" O.C., 4' MINIMUM LENGTH, EACH SIDE OF CASTING
2. GROUT BOTTOM TO DRAIN TO CENTER
3. PIPE CUT-OUTS TO BE LOCATED WHERE REQUIRED
4. INLET PROTECTION TO BE INSTALLED IN CATCH BASIN AND MAINTAINED AS DIRECTED BY THE ENGINEER

Standard Plate Library
City of Hanover
Title: Standard Catch Basin
Date: 01-16 | Plate No. STO - 01
Revised:

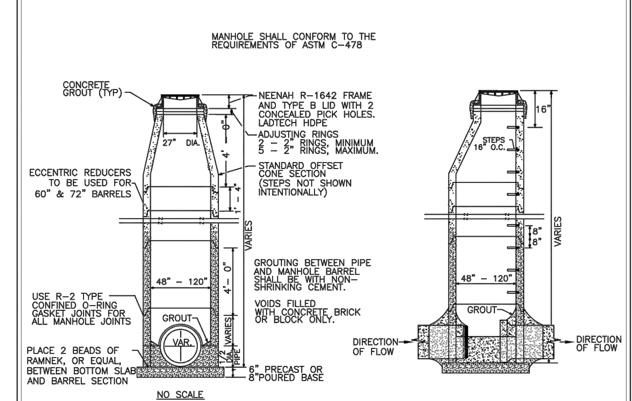

NOTES:
1. MANHOLE STEPS SHALL BE CAST ALUMINUM OR MA INDUSTRY WITH VINYL COATING OR APPROVED EQUIVALENT AND SHALL BE LOCATED ON THE DOWN STREAM SIDE OF THE MANHOLE
2. STEPS SHALL BE PLACED SO THAT THE OFFSET VERTICAL PORTION OF THE CONE IS FACING DOWN STREAM
3. MANHOLE COVER SHALL BE CAST WITH THE WORDS "STORM SEWER"
4. THE INITIAL AND FINAL RAISING OF CASTINGS SHALL BE CONSIDERED INCIDENTAL TO THE PROJECT
5. MAXIMUM DEPTH FROM TOP OF CASTING TO FIRST STEP SHALL NOT BE MORE THAN 16"
6. STEPS SHALL ALIGN WITH THE OPENING TO PROVIDE ACCESS TO THE MANHOLE

Standard Plate Library
City of Hanover
Title: Standard Manhole for Storm Drain
Date: 01-16 | Plate No. STO - 02
Revised:

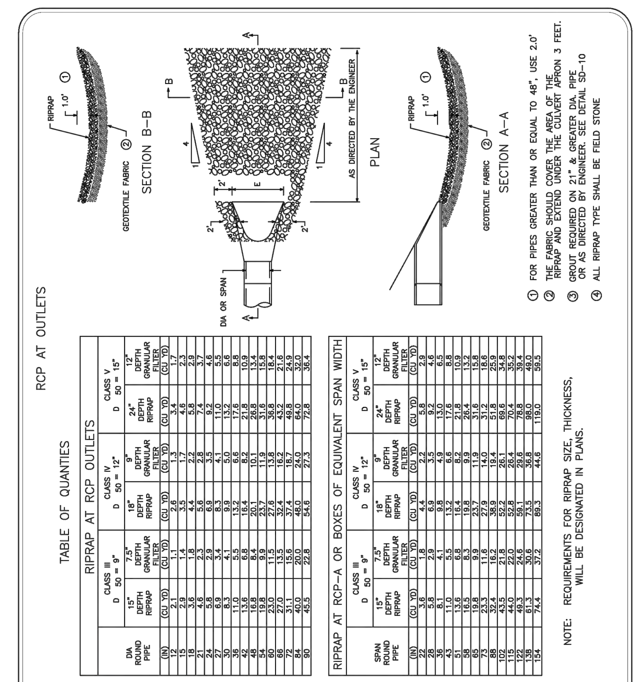

① FOR PIPES GREATER THAN OR EQUAL TO 48", USE 2.0'
② THE FABRIC SHOULD COVER THE AREA OF THE RIPRAP AND EXTEND UNDER THE CULVERT APRON 3 FEET.
③ GROUT REQUIRED ON 21" & GREATER DIA. PIPE OR AS DIRECTED BY ENGINEER. SEE DETAIL SD-10
④ ALL RIPRAP TYPE SHALL BE FIELD STONE

NOTE: REQUIREMENTS FOR RIPRAP SIZE, THICKNESS, WILL BE DESIGNATED IN PLANS.

Standard Plate Library
City of Hanover
Title: Riprap Detail
Date: 01-16 | Plate No. STO - 04
Revised:

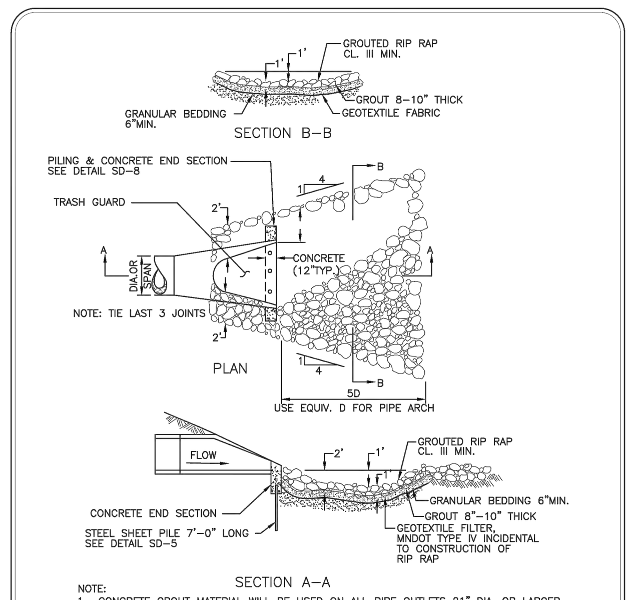

NOTE:
1. CONCRETE GROUT MATERIAL WILL BE USED ON ALL PIPE OUTLETS 21" DIA. OR LARGER.
2. PLACE RIPRAP INTO THE CONCRETE GROUT AFTER THE GROUT HAS BEEN PLACED AT A 8"-10" UNIFORM DEPTH.
3. DIMENSIONS AND C.Y. OF CONCRETE WILL BE DETERMINED BY ENGINEER.

Standard Plate Library
City of Hanover
Title: Grouted Riprap at Outlets
Date: 01-16 | Plate No. STO - 05
Revised:

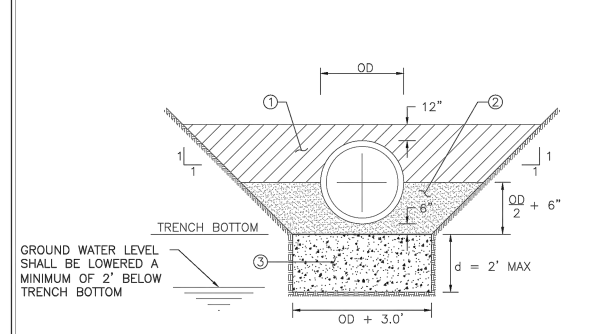

NOTES:
1. SELECTED MATERIAL (MNDOT SPEC 2451.3D) (INCIDENTAL)
2. GRANULAR PIPE BEDDING MATERIAL (MNDOT SPEC 3149.2F) (INCIDENTAL)
3. 1½" CLEAR AGGREGATE BEDDING. TO BE USED ONLY IN AREAS AS DIRECTED BY ENGINEER. (NO PAYMENT WILL BE MADE WITHOUT PRIOR APPROVAL FROM THE ENGINEER)

Standard Plate Library
City of Hanover
Title: RCP Pipe Bedding Detail
Date: 01-16 | Plate No. STO - 07
Revised:

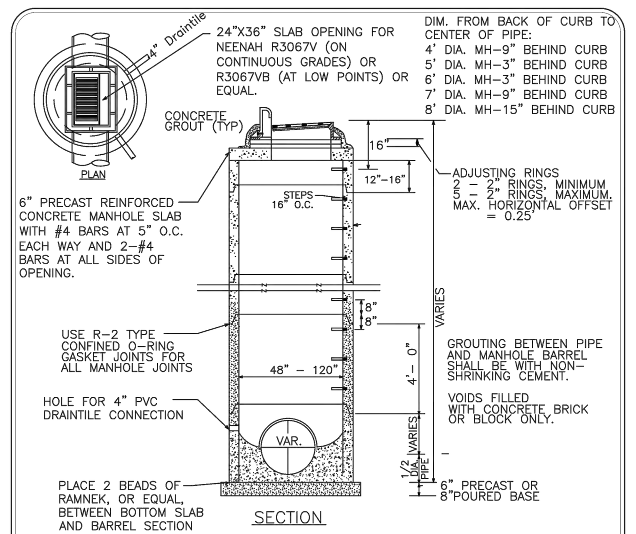

NOTES:
1. MANHOLE STEPS SHALL BE CAST ALUMINUM OR MA INDUSTRY WITH VINYL COATING OR APPROVED EQUIVALENT AND SHALL BE LOCATED ON THE DOWN STREAM SIDE OF THE MANHOLE
2. STEPS SHALL BE PLACED SO THAT THE OFFSET VERTICAL PORTION OF THE CONE IS FACING DOWN STREAM
3. MANHOLE COVER SHALL BE CAST WITH THE WORDS "STORM SEWER"
4. THE INITIAL AND FINAL RAISING OF CASTINGS SHALL BE CONSIDERED INCIDENTAL TO THE PROJECT
5. MAXIMUM DEPTH FROM TOP OF CASTING TO FIRST STEP SHALL NOT BE MORE THAN 16"
6. STEPS SHALL ALIGN WITH THE OPENING TO PROVIDE ACCESS TO THE MANHOLE
7. TOP BARREL SECTION BELOW TOP SLAB TO HAVE FLAT TOP EDGE SEALED WITH 2 BEADS OF RAMNEK OR EQUAL.

Standard Plate Library
City of Hanover
Title: Catch Basin Manhole Type II
Date: 01-16 | Plate No. STO - 10
Revised:

SEE CITY PLATE NO. STO-09 FOR RIPRAP PLACEMENT.

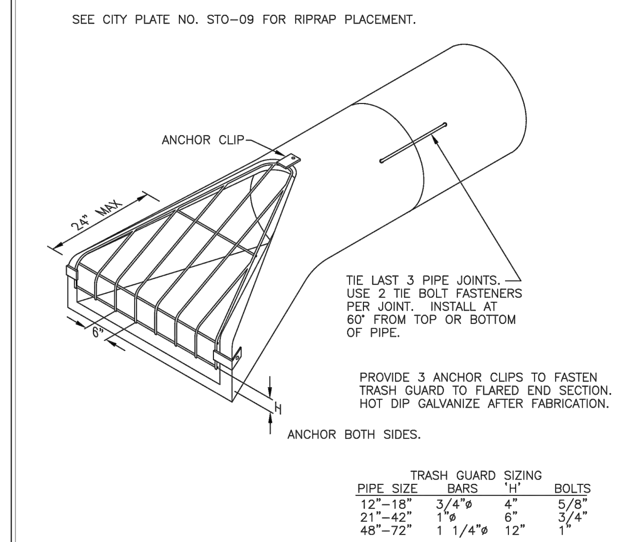

PROVIDE 3 ANCHOR CLIPS TO FASTEN TRASH GUARD TO FLARED END SECTION. HOT DIP GALVANIZE AFTER FABRICATION.

TRASH GUARD SIZING

PIPE SIZE	BARS	'H'	BOLTS
12"-18"	3/4"ø	4"	5/8"
21"-42"	1"ø	6"	3/4"
48"-72"	1 1/4"ø	12"	1"

Standard Plate Library
City of Hanover
Title: Flared End Section And Trash Guard
Date: 01-16 | Plate No. STO - 14
Revised:

NOTE:
BARRICADE AS PER MNDOT STANDARD DETAILS

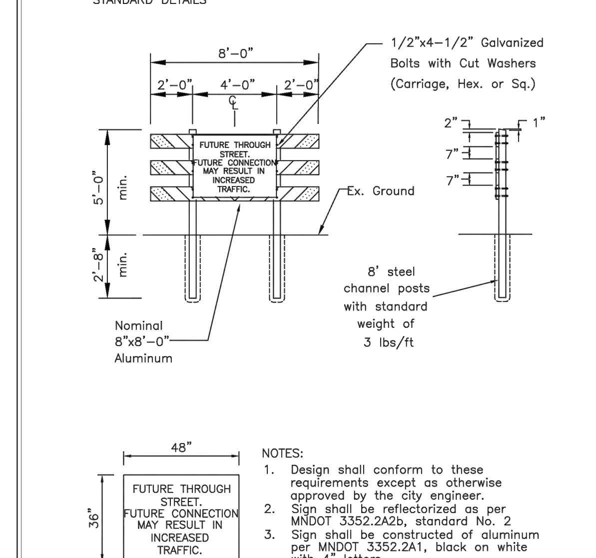

NOTES:
1. Design shall conform to these requirements except as otherwise approved by the city engineer.
2. Sign shall be reflectorized as per MNDOT 3352.2A2b, standard No. 2
3. Sign shall be constructed of aluminum per MNDOT 3352.2A1, black on white with 4" letters.

Standard Plate Library
City of Hanover
Title: Future Through Street Sign
Date: 01-16 | Plate No. STR - 21
Revised:

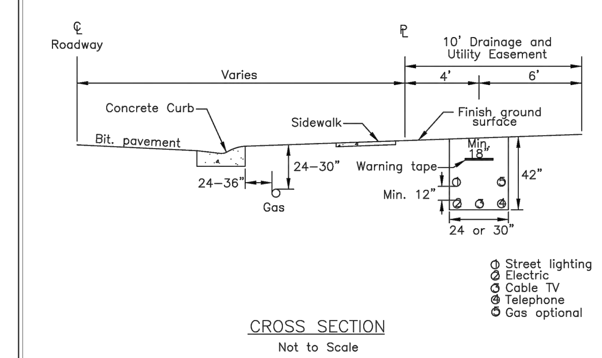

NOTE:
1. All conduit crossings under roadways shall be the contractors responsibility to install the correct size and number for all utilities. The contractor shall also install one additional conduit crossing for future use.
2. The City recommends joint trenching for installation of utilities within City right of way and utility easements. Gas can be placed in a separate trench located behind the curb. All trenches shall be compacted.
3. All curb stops and boxes will be located 3' from the Drainage & Utility Easement.
4. All curb stops and boxes shall be placed 10' from back of curb on private streets that have no City right of way beyond the curb.
5. All sewer clean outs shall be placed on front property lines see City plate SAN-10.
6. Street lights shall be placed as close to 300' intervals as possible in residential areas and located on property corners. All street light electrical lines shall be ruggedized type wiring or encased in conduit and placed within the joint trench.
7. Center of utility trench in private streets shall be 7' from back of curb. Gas can be placed 2-3' from back of curb.
8. All utility boxes shall be placed on common property corners.

Standard Plate Library
City of Hanover
Title: Utility Layout
Date: 01-16 | Plate No. STR - 22
Revised:

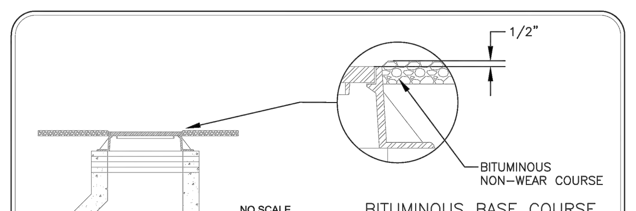

NOTES:
1. ALL CASTINGS AND INFILTRATION BARRIERS SHALL BE INSTALLED AS DETAILED ABOVE PRIOR TO PLACEMENT OF THE FIRST LIFT BITUMINOUS PAVEMENT

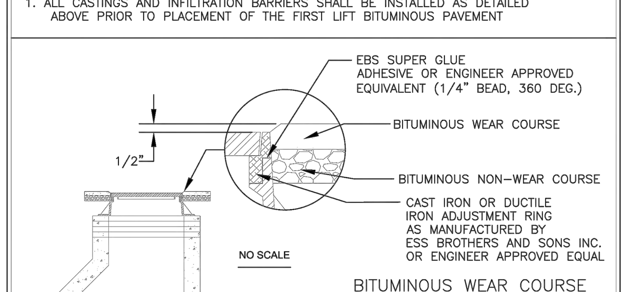

NOTES:
1. THE HEIGHT OF THE CAST IRON OR DUCTILE IRON ADJUSTMENT RING IS DETERMINED BY THE THICKNESS OF THE WEAR COURSE.
2. CAST IRON OR DUCTILE IRON ADJUSTMENT RINGS TO BE INSTALLED AS PER MANUFACTURE'S RECOMMENDATION.
3. AFTER INSTALLATION OF ADJUSTMENT RING, TRAFFIC BARREL SHALL BE PLACED ON STRUCTURE UNTIL WEAR COURSE IS INSTALLED (INCIDENTAL).

Standard Plate Library
City of Hanover
Title: Casting Adjustment Detail
Date: 01-16 | Plate No. STR - 13
Revised:

FUTURE SEWER AND WATER LINES ARE TO BE EXTENDED BEYOND THE END OF THE STREET.
A HYDRANT & GATE VALVE SHALL BE PLACED AT THE END OF THE WATERMAIN.

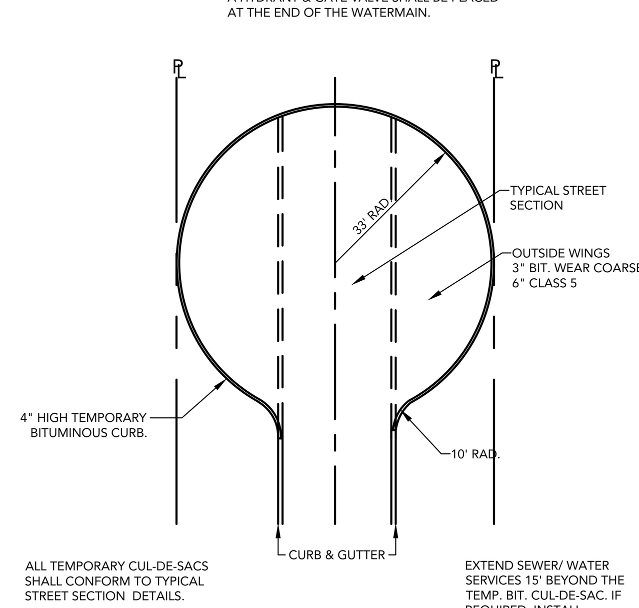

ALL TEMPORARY CUL-DE-SACS SHALL CONFORM TO TYPICAL STREET SECTION DETAILS.

EXTEND SEWER/ WATER SERVICES 15' BEYOND THE TEMP. BIT. CUL-DE-SAC. IF REQUIRED, INSTALL BARRICADES 10' BEYOND BITUMINOUS EDGE.

LOUCKS | TEMPORARY BITUMINOUS CUL-DE-SAC | LOUCKS PLATE NO. CUSTOM | DRAWN 7/2017

OUTLET CONTROL STRUCTURE ELEVATION TABLE

OCS NO.	A	B	C	D	E	F	G
OCS 1	968.0	972.1	970.00	978.4	978.4	48"	975.0

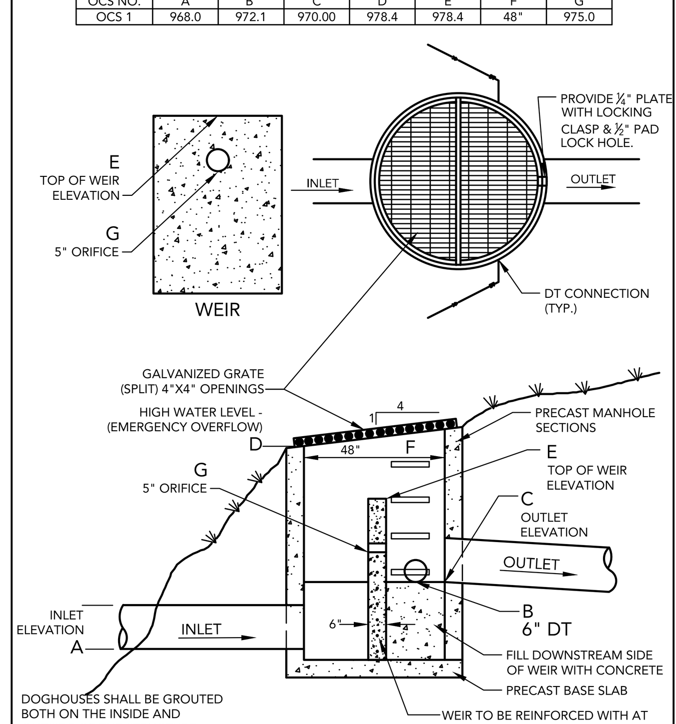

DOGHOUSES SHALL BE GROUTED BOTH ON THE INSIDE AND OUTSIDE OF THE STRUCTURE.

WEIR TO BE REINFORCED WITH AT LEAST #4 REBAR, 12" ON CENTER.

LOUCKS | OCS 1 | LOUCKS PLATE NO. - | DRAWN 4/2017

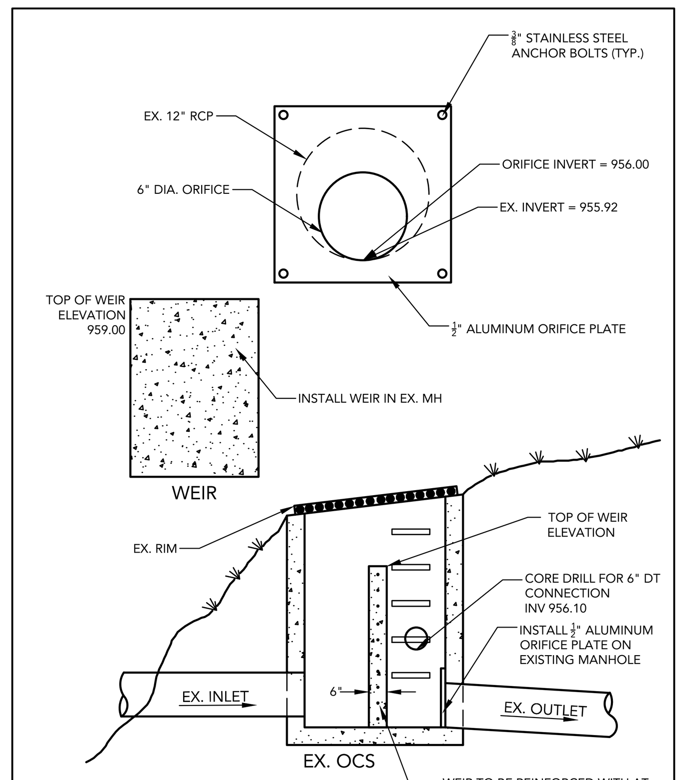

WEIR TO BE REINFORCED WITH AT LEAST #4 REBAR, 12" ON CENTER.

LOUCKS | EXISTING OCS - POND 4 MODIFICATION | LOUCKS PLATE NO. - | DRAWN 4/2018

OUTLET CONTROL STRUCTURE ELEVATION TABLE

OCS NO.	A	B	C	D	F
OCS 1	N/A	978.10	976.00	981.60	48"

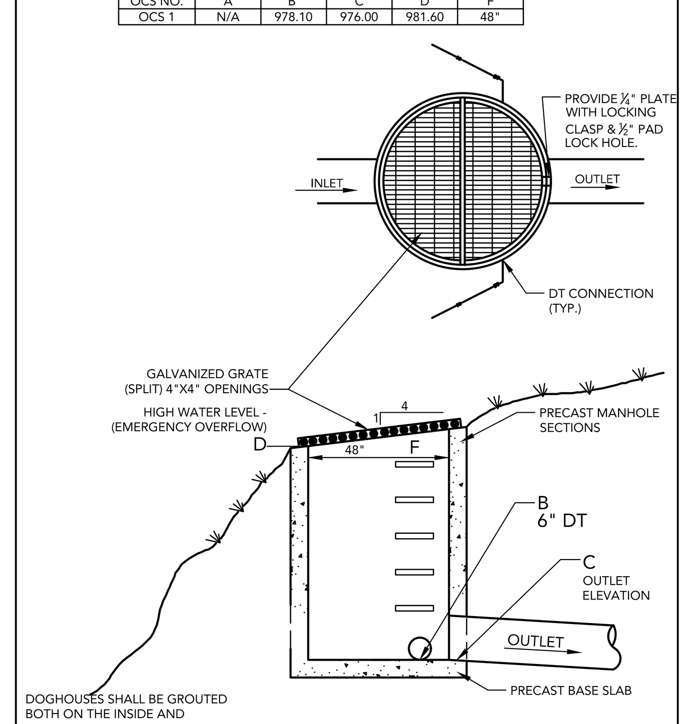

DOGHOUSES SHALL BE GROUTED BOTH ON THE INSIDE AND OUTSIDE OF THE STRUCTURE.

LOUCKS | OCS 6 | LOUCKS PLATE NO. - | DRAWN 4/2017

CATCH BASIN MANHOLE STRUCTURE ELEVATION TABLE

MH NO.	A	B	C	D	E
OCS 133	973.00	973.00	973.00	980.00	48"

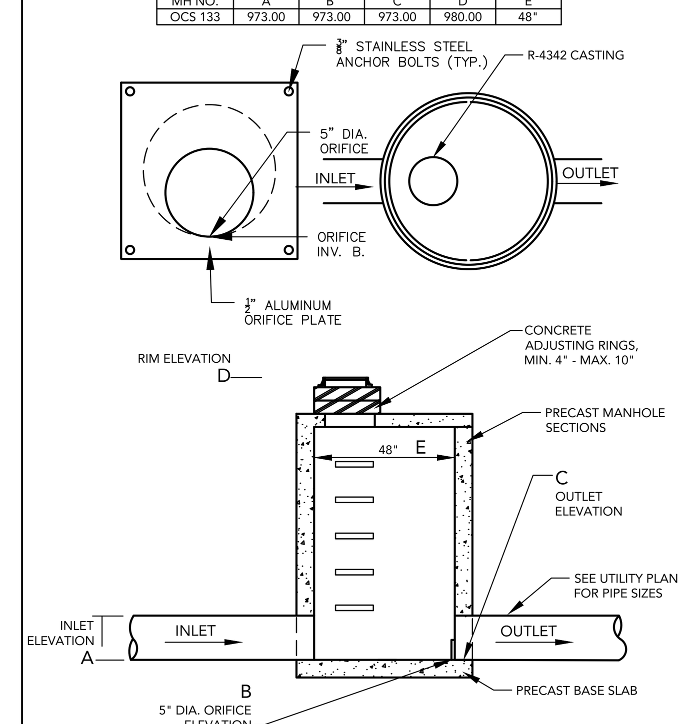

LOUCKS | CBMH 133 | LOUCKS PLATE NO. - | DRAWN 02/2017

CROW RIVER HEIGHTS WEST FUTURE ADD.

HANOVER, MN

BACKES COMPANIES
11413 ASHBURY CIRCLE N.
CHAMPLIN, MN 55316
PHONE: (612) 369-7750
FAX (612) 566-1525

LOUCKS
PLANNING
CIVIL ENGINEERING
LAND SURVEYING
LANDSCAPE ARCHITECTURE
ENVIRONMENTAL

7200 Hemlock Lane, Suite 300
Maple Grove, MN 55369
763.424.5505
www.loucksinc.com

CADD QUALIFICATION

CADD files prepared by the Consultant for this project are instruments of the Consultant professional services for use solely with respect to this project. These CADD files shall not be used on other projects, for additions to this project, or for completion of this project by others without written approval by the Consultant. With the Consultant's approval, others may be permitted to obtain copies of the CADD drawing files for information and reference only. All intentional or unintentional revisions, additions, or deletions to these CADD files shall be made at the full risk of that party making such revisions, additions or deletions and that party shall hold harmless and indemnify the Consultant from any & all responsibilities, claims, and liabilities.

SUBMITTAL/REVISIONS

04/20/18 CITY SUBMITTAL

PROFESSIONAL SIGNATURE

I hereby certify that this plan, specification or report was prepared by me or under my direct supervision and that I am a duly Licensed Professional Engineer under the laws of the State of Minnesota.

PRELIMINARY

License No. ... W. McLouth - PE 20383
Date

QUALITY CONTROL

Loucks Project No.	16101A
Project Lead	TWM
Drawn By	ZHW
Checked By	TWM
Review Date	04/02/18

SHEET INDEX

C0-1 COVER SHEET
C1-1 EXISTING CONDITIONS
C1-2 PRELIMINARY PLAT
C2-0 - C2-2 SITE PLAN
C3-0 - C3-2 GRADING PLAN
C3-3 - C3-5 SWPPP PLAN & NOTES
C4-0 - C4-2 UTILITY PLAN
C8-1 - C8-2 DETAILS
L0-1 - L0-3 TREE PRESERVATION
L0-4 TREE INVENTORY
L1-1 - L1-2 LANDSCAPE PLANS
L2-1 LANDSCAPE DETAILS

DETAILS
C8-1

Plotted: 04 /18 / 2018 8:27 AM W:\2016\16101A\CADD DATA\CIVIL_dwg Sheet Files\C8-1 DETAILS

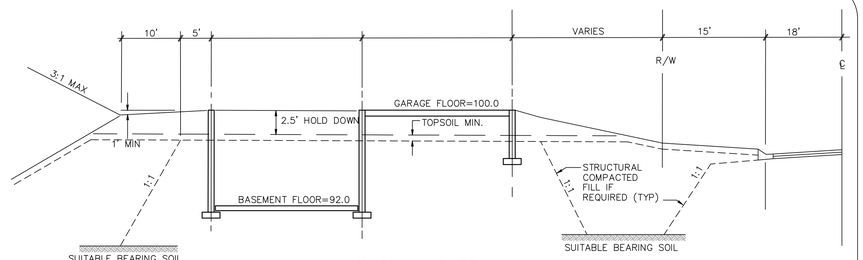

FULL BASEMENT (FB)

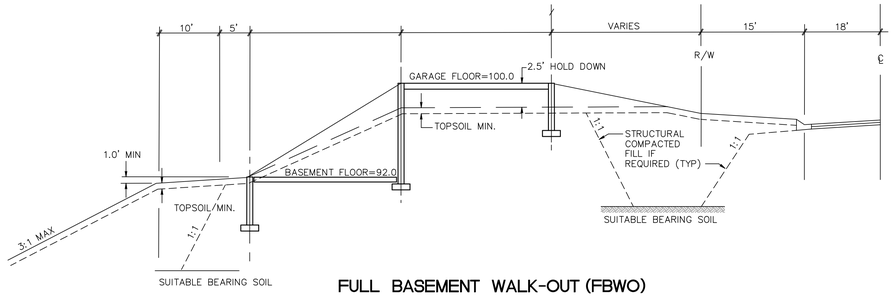

FULL BASEMENT WALK-OUT (FBWO)

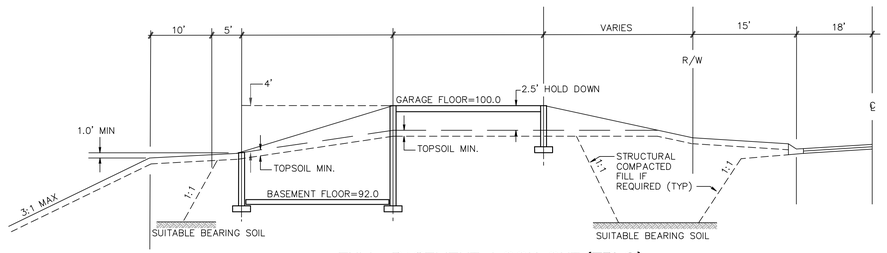

FULL BASEMENT LOOK-OUT (FBLO)

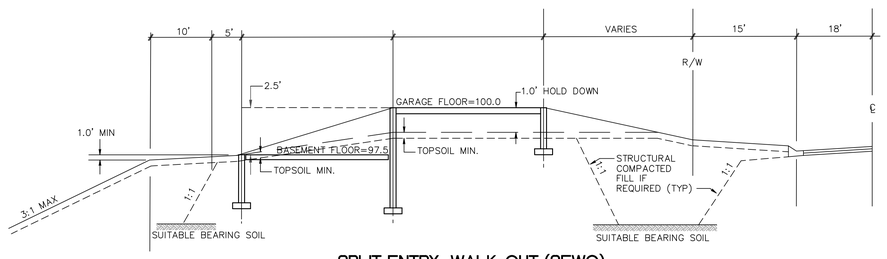

SPLIT ENTRY WALK-OUT (SEWO)

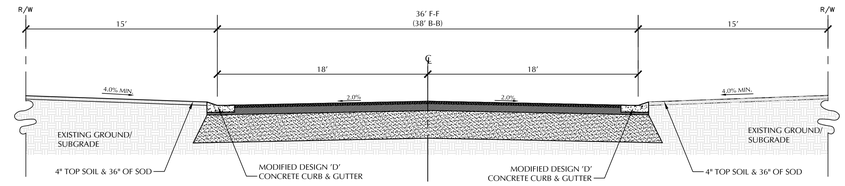

TYPICAL STREET SECTION
NOT TO SCALE

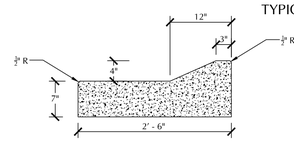

MODIFIED DESIGN 'D' CURB & GUTTER

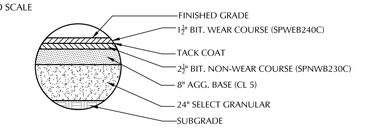

TYPICAL RESIDENTIAL STREET BITUMINOUS SECTION

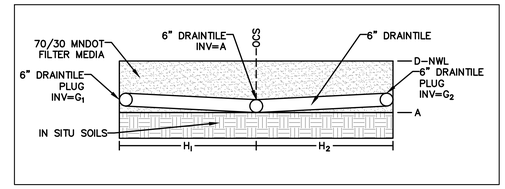

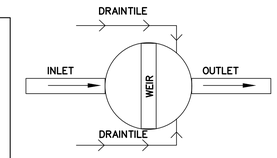

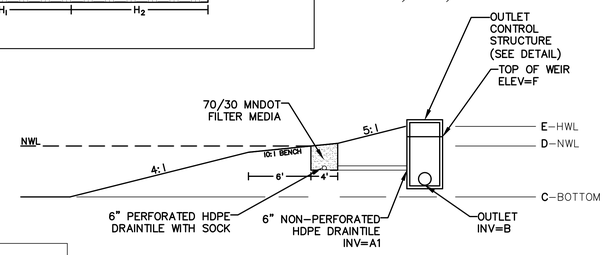

POND & FILTRATION BENCH DETAIL

POND & FILTRATION BENCH ELEVATION TABLE

POND NO	A	A1	B	C	D	E	F	G_1	G_2	H_1	H_2
POND 1	972.60	971.10	970.00	965.00	974.60	978.20	978.40	973.10	973.10	635	502
POND 4	956.60	956.10	955.92	953.00	958.60	962.10	959.00	957.10	957.10	244	245
POND 6	978.60	978.10	976.00	974.00	980.60	981.50	N/A	979.10	979.10	204	144

CROW RIVER HEIGHTS WEST FUTURE ADD.

HANOVER, MN

BACKES COMPANIES
11413 ASHBURY CIRCLE N.
CHAMPLIN, MN 55316
PHONE: (612) 369-7750
FAX (612) 566-1525

LOUCKS
PLANNING
CIVIL ENGINEERING
LAND SURVEYING
LANDSCAPE ARCHITECTURE
ENVIRONMENTAL
7200 Hemlock Lane, Suite 300
Maple Grove, MN 55369
763.424.5505
www.loucksinc.com

CADD QUALIFICATION

CADD files prepared by the Consultant for this project are instruments of the Consultant professional services for use solely with respect to this project. These CADD files shall not be used on other projects, for additions to this project, or for completion of this project by others without written approval by the Consultant. With the exception of such authorized use, no other person or entity owning any copy of the CADD software files or information is entitled to rely on any alleged intentional or unintentional revisions, additions, or deletions to these CADD files shall be made at the full risk of that party making such revisions, additions or deletions and that party shall hold harmless and indemnify the Consultant from any & all responsibilities, claims, and liabilities.

SUBMITTAL/REVISIONS

04/20/18 CITY SUBMITTAL

PROFESSIONAL SIGNATURE

I hereby certify that this plan, specification or report was prepared by me or under my direct supervision and that I am a duly Licensed Professional Engineer under the laws of the State of Minnesota.

PRELIMINARY

License No. 20383
Date

QUALITY CONTROL

Loucks Project No.	16101A
Project Lead	TWM
Drawn By	ZHW
Checked By	TWM
Review Date	04/02/18

SHEET INDEX

C0-1 COVER SHEET
C1-1 EXISTING CONDITIONS
C1-2 PRELIMINARY PLAT
C2-0 - C2-2 SITE PLAN
C3-0 - C3-2 GRADING PLAN
C3-3 - C3-5 SWPPP PLAN & NOTES
C4-0 - C4-2 UTILITY PLAN
C8-1 - C8-2 DETAILS
L0-1 - L0-3 TREE PRESERVATION
L0-4 TREE INVENTORY
L1-1 - L1-2 LANDSCAPE PLANS
L2-1 LANDSCAPE DETAILS

DETAILS

C8-2

Plotted: 04 /18 / 2018 8:27 AM W:\2016\16101A\CADD DATA\CWL_dwg Sheet Files\C8-1 DETAILS

TREE INVENTORY / REPLACEMENT - OVERALL SITE

	TOTAL TREES	TOTAL CAL. IN.
TOTAL SIGNIFICANT TREES ON-SITE	771	9,260.0 CAL. IN.
TREES TO BE SAVED	95	1,268.5 CAL. IN.
TREES TO BE REMOVED	676	7,991.5 CAL. IN.
TOTAL TREES TO BE MITIGATED	676	
PROPOSED POND SLOPE TREES - 12 TREES / ACRE PROPOSED LOT TREES - 2 TREES PER LOT	34 318	
TOTAL PROPOSED TREES	352	

TREE PROTECTION BOUNDARY - INSTALL SNOW FENCING OR POLYETHYLENE LAMINAR SAFETY NETTING AT DRIP LINE OF ALL TREES TO BE SAVED

N

0 100 200

SCALE IN FEET

CROW RIVER HEIGHTS WEST FUTURE ADD.

HANOVER, MN

BACKES COMPANIES
11413 ASHBURY CIRCLE N.
CHAMPLIN, MN 55316
PHONE: (612) 369-7750
FAX (612) 566-1525

LOUCKS
PLANNING
CIVIL ENGINEERING
LAND SURVEYING
LANDSCAPE ARCHITECTURE
ENVIRONMENTAL
7200 Hemlock Lane, Suite 300
Maple Grove, MN 55369
763.424.5505
www.loucksinc.com

CADD QUALIFICATION

CADD files prepared by the Consultant for this project are instruments of the Consultant's professional services for use solely with respect to this project. These CADD files shall not be used on other projects, for additions to this project, or for completion of this project by others without written approval by the Consultant. With the consent of the recipient, CADD files may be provided in other formats of the CADD drawing files for information or convenience only. All intentional or unintentional revisions, additions, or deletions to these CADD files shall be made at the full risk of that party making such revisions, additions or deletions and that party shall hold harmless and indemnify the Consultant from any & all responsibilities, claims, and liabilities.

SUBMITTAL/REVISIONS

04/20/18	CITY SUBMITTAL

PROFESSIONAL SIGNATURE

I hereby certify that this plan, specification or report was prepared by me or under my direct supervision and that I am a duly Licensed Professional Engineer under the laws of the State of Minnesota.

PRELIMINARY

License Name: Todd M. Holcouth - PE
License No. 20383
Date:

QUALITY CONTROL

Loucks Project No.	16101A
Project Lead	TWM
Drawn By	ZHW
Checked By	TWM
Review Date	04/02/18

SHEET INDEX

C0-1 ..... COVER SHEET
C1-1 ..... EXISTING CONDITIONS
C1-2 ..... PRELIMINARY PLAT
C2-0 - C2-2 ..... SITE PLAN
C3-0 - C3-2 ..... GRADING PLAN
C3-3 - C3-5 ..... SWPPP PLAN & NOTES
C4-0 - C4-2 ..... UTILITY PLAN
C8-1 - C8-2 ..... DETAILS
L0-1 - L0-3 ..... TREE PRESERVATION
L0-4 ..... TREE INVENTORY
L1-1 - L1-2 ..... LANDSCAPE PLANS
L2-1 ..... LANDSCAPE DETAILS

OVERALL TREE PRESERVATION PLAN

L0-1

Plotted: 04 /18 /2018 11:8 AM W:\2016\16101A\CADD DATA\LANDSCAPE_dwg Sheet Files - 4-A Addition\L16101A L0-1 Tree Preservation

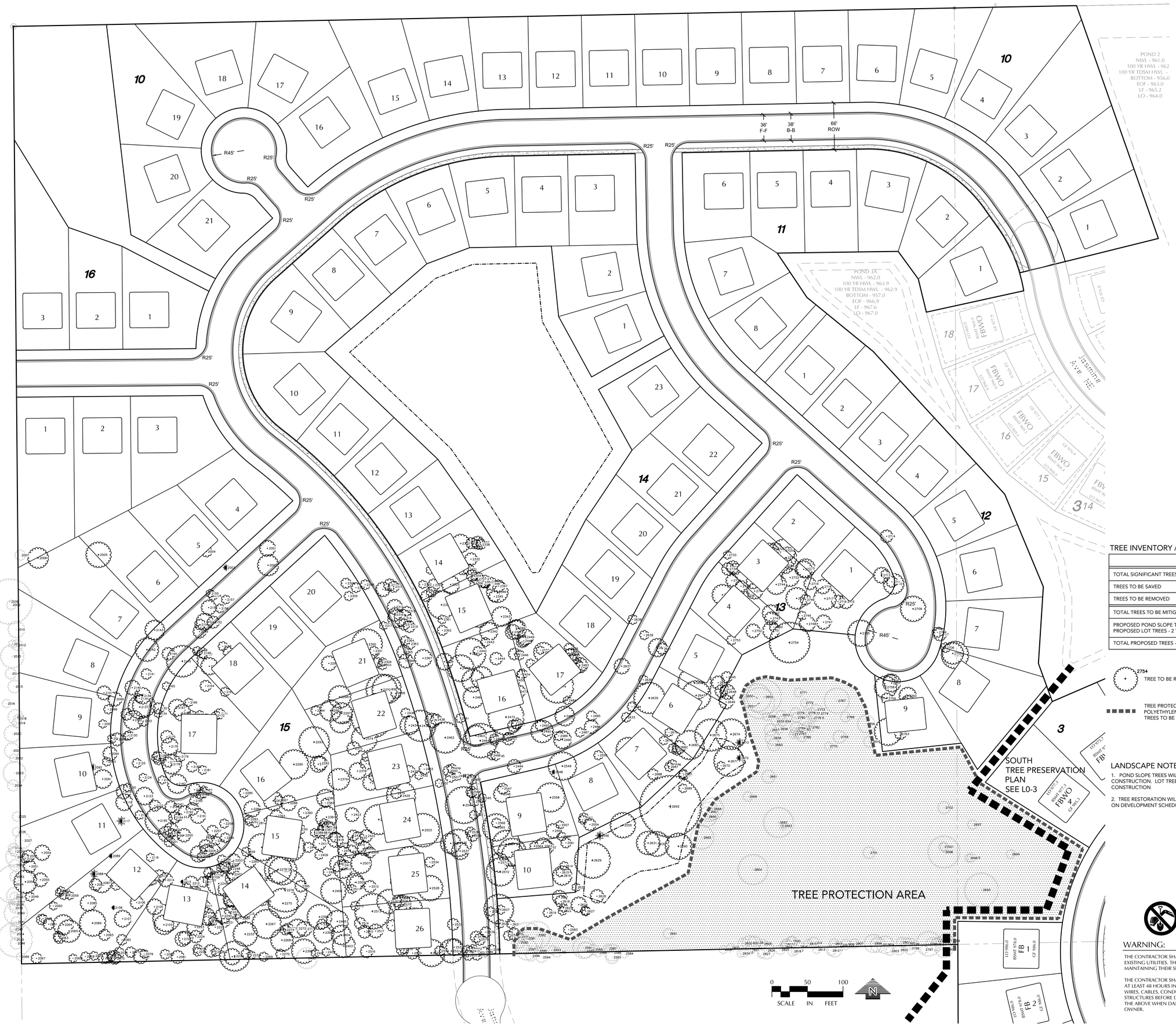

TREE INVENTORY / REPLACEMENT - NORTH

	TOTAL TREES	TOTAL CAL. IN.
TOTAL SIGNIFICANT TREES ON-SITE	771	9,260.0 CAL. IN.
TREES TO BE SAVED	95	1,268.5 CAL. IN.
TREES TO BE REMOVED	676	7,991.5 CAL. IN.
TOTAL TREES TO BE MITIGATED -	676	
PROPOSED POND SLOPE TREES - 12 TREES / ACRE PROPOSED LOT TREES - 2 TREES PER LOT	27 200	
TOTAL PROPOSED TREES - NORTH	227	

2754 TREE TO BE REMOVED - SEE SHEET L0-4

TREE PROTECTION BOUNDARY - INSTALL SNOW FENCING OR POLYETHYLENE LAMINAR SAFETY NETTING AT DRIP LINE OF ALL TREES TO BE SAVED

LANDSCAPE NOTES

1. POND SLOPE TREES WILL BE PLANTED AT TIME OF GRADING AND ROAD CONSTRUCTION. LOT TREES AND SHRUBS WILL BE PLANTED AT TIME OF BUILDING CONSTRUCTION

2. TREE RESTORATION WILL BE APPLIED AT TIME OF PHASED TREE REMOVAL BASED ON DEVELOPMENT SCHEDULE.

CALL BEFORE YOU DIG!

Gopher State One Call

TWIN CITY AREA: 651-454-0002
TOLL FREE: 1-800-252-1166

WARNING:

THE CONTRACTOR SHALL BE RESPONSIBLE FOR CALLING FOR LOCATIONS OF ALL EXISTING UTILITIES. THEY SHALL COOPERATE WITH ALL UTILITY COMPANIES IN MAINTAINING THEIR SERVICE AND / OR RELOCATION OF LINES.

THE CONTRACTOR SHALL CONTACT GOPHER STATE ONE CALL AT 651-454-0002 AT LEAST 48 HOURS IN ADVANCE FOR THE LOCATIONS OF ALL UNDERGROUND WIRES, CABLES, CONDUITS, PIPES, MANHOLES, VALVES OR OTHER BURIED STRUCTURES BEFORE DIGGING. THE CONTRACTOR SHALL REPAIR OR REPLACE THE ABOVE WHEN DAMAGED DURING CONSTRUCTION AT NO COST TO THE OWNER.

CROW RIVER HEIGHTS WEST FUTURE ADD.

HANOVER, MN

BACKES COMPANIES
11413 ASHBURY CIRCLE N.
CHAMPLIN, MN 55316
PHONE: (612) 369-7750
FAX (612) 566-1525

LOUCKS
PLANNING
CIVIL ENGINEERING
LAND SURVEYING
LANDSCAPE ARCHITECTURE
ENVIRONMENTAL
7200 Hemlock Lane, Suite 300
Maple Grove, MN 55369
763.424.5505
www.loucksinc.com

CADD QUALIFICATION

CADD files prepared by the Consultant for this project are instruments of the Consultant professional services for use solely with respect to this project. These CADD files shall not be used on other projects, for additions to this project, or for completion of this project by others without written approval by the Consultant. With the Consultant's approval, others may be permitted to obtain copies of the CADD drawing files for information and reference only. All intentional or unintentional revisions, additions, or deletions to these CADD files shall be made at the full risk of that party making such revisions, additions or deletions and that party shall hold harmless and indemnify the Consultant from any & all responsibilities, claims, and liabilities.

SUBMITTAL/REVISIONS

04/20/18 CITY SUBMITTAL

PROFESSIONAL SIGNATURE

I hereby certify that this plan, specification or report was prepared by me or under my direct supervision and that I am a duly Licensed Professional Engineer under the laws of the State of Minnesota.

PRELIMINARY

License Number 20383
Date

QUALITY CONTROL

Loucks Project No.	16101A
Project Lead	TWM
Drawn By	ZHW
Checked By	TWM
Review Date	04/02/18

SHEET INDEX

C0-1 ..... COVER SHEET
C1-1 ..... EXISTING CONDITIONS
C1-2 ..... PRELIMINARY PLAT
C2-0 - C2-2 ..... SITE PLAN
C3-0 - C3-2 ..... GRADING PLAN
C3-3 - C3-5 ..... SWPPP PLAN & NOTES
C4-0 - C4-2 ..... UTILITY PLAN
C8-1 - C8-2 ..... DETAILS
L0-1 - L0-3 ..... TREE PRESERVATION
L0-4 ..... TREE INVENTORY
L1-1 - L1-2 ..... LANDSCAPE PLANS
L2-1 ..... LANDSCAPE DETAILS

NORTH TREE PRESERVATION PLAN

L0-2

Plotted: 04 /18 / 2018 1:15 PM W:\2016\16101A\CADD DATA\LANDSCAPE\ .dwg Sheet Files: 4-A Addition\L16101A L0-2 Tree Preservation

CROW RIVER HEIGHTS WEST FUTURE ADD.

HANOVER, MN

BACKES COMPANIES
11413 ASHBURY CIRCLE N.
CHAMPLIN, MN 55316
PHONE: (612) 369-7750
FAX (612) 566-1525

LOUCKS
PLANNING
CIVIL ENGINEERING
LAND SURVEYING
LANDSCAPE ARCHITECTURE
ENVIRONMENTAL
7200 Hemlock Lane, Suite 300
Maple Grove, MN 55369
763.424.5505
www.loucksinc.com

TREE INVENTORY / REPLACEMENT - SOUTH

	TOTAL TREES	TOTAL CAL. IN.
TOTAL SIGNIFICANT TREES ON-SITE	0	0
TREES TO BE SAVED	0	0
TREES TO BE REMOVED	0	0
TOTAL TREES TO BE MITIGATED -	0	
PROPOSED POND SLOPE TREES - 12 TREES / ACRE PROPOSED LOT TREES - 2 TREES PER LOT	7 118	
TOTAL PROPOSED TREES	125	

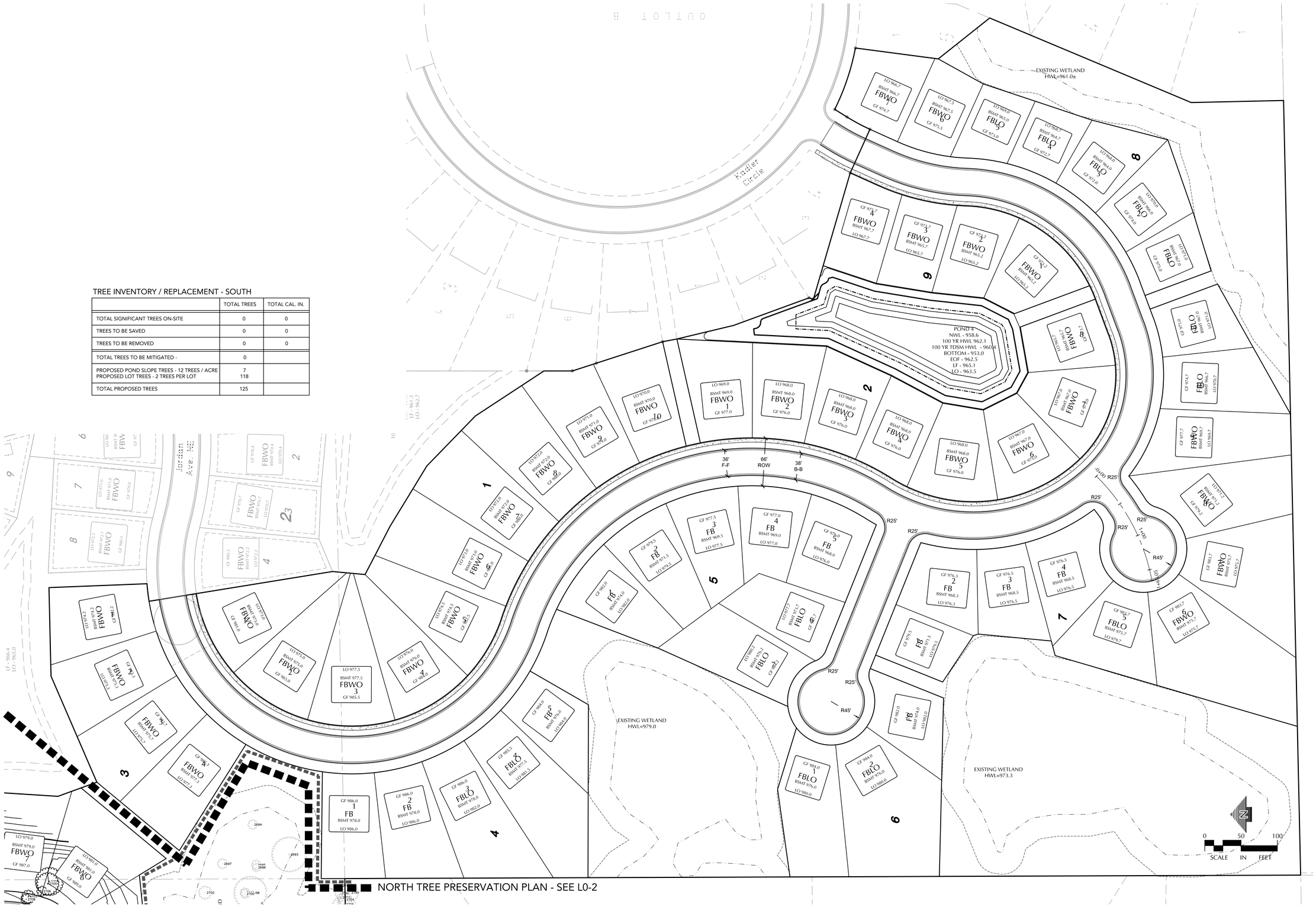

CALL BEFORE YOU DIG!
Gopher State One Call
TWIN CITY AREA: 651-454-0002
TOLL FREE: 1-800-252-1166

WARNING:

THE CONTRACTOR SHALL BE RESPONSIBLE FOR CALLING FOR LOCATIONS OF ALL EXISTING UTILITIES. THEY SHALL COOPERATE WITH ALL UTILITY COMPANIES IN MAINTAINING THEIR SERVICE AND / OR RELOCATION OF LINES.

THE CONTRACTOR SHALL CONTACT GOPHER STATE ONE CALL AT 651-454-0002 AT LEAST 48 HOURS IN ADVANCE FOR THE LOCATIONS OF ALL UNDERGROUND WIRES, CABLES, CONDUITS, PIPES, MANHOLES, VALVES OR OTHER BURIED STRUCTURES BEFORE DIGGING. THE CONTRACTOR SHALL REPAIR OR REPLACE THE ABOVE WHEN DAMAGED DURING CONSTRUCTION AT NO COST TO THE OWNER.

CADD QUALIFICATION

CADD files prepared by the Consultant for this project are instruments of the Consultant professional services for use solely with respect to this project. These CADD files shall not be used on other projects, for additions to this project, or for completion of this project by others without written approval by the Consultant. With the consent of the recipient, CADD files may be provided to other recipients of the CADD drawing files for information or reference only. All intentional or unintentional revisions, additions, or deletions to these CADD files shall be made at the full risk of that party making such revisions, additions or deletions and that party shall hold harmless and indemnify the Consultant from any & all responsibilities, claims, and liabilities.

SUBMITTAL/REVISIONS

04/20/18 CITY SUBMITTAL

PROFESSIONAL SIGNATURE

I hereby certify that this plan, specification, or report was prepared by me or under my direct supervision and that I am a duly Licensed Professional Engineer under the laws of the State of Minnesota.

PRELIMINARY

License No. 20383
Date
Name McLouth - PE

QUALITY CONTROL

Loucks Project No.	16101A
Project Lead	TWM
Drawn By	ZHW
Checked By	TWM
Review Date	04/02/18

SHEET INDEX

C0-1 ..... COVER SHEET
C1-1 ..... EXISTING CONDITIONS
C1-2 ..... PRELIMINARY PLAT
C2-0 - C2-2 ..... SITE PLAN
C3-0 - C3-2 ..... GRADING PLAN
C3-3 - C3-5 ..... SWPPP PLAN & NOTES
C4-0 - C4-2 ..... UTILITY PLAN
C8-1 - C8-2 ..... DETAILS
L0-1 - L0-3 ..... TREE PRESERVATION
L0-4 ..... TREE INVENTORY
L1-1 - L1-2 ..... LANDSCAPE PLANS
L2-1 ..... LANDSCAPE DETAILS

SOUTH TREE PRESERVATION PLAN

L0-3

Plotted: 04 /18 / 2018 10:56 AM W:\2016\16101A\CADD DATA\LANDSCAPE\.dwg Sheet Files - 4-6 Addition\L16101A L0-2 Tree Preservation

TREE #	SPECIES	CAL. IN.	COND.	STEMS	SPECIMAN	STATUS
2001	Ash, green	14.0	Fair	2		Removed
2002	Elm, American	19.5	Good	1		Removed
2003	Redcedar	6.0	Good	1		Removed
2004	Elm, American	8.5	Good	1		Removed
2005	Maple, silver	24.0	Fair	1		Saved
2006	Maple, silver	19.0	Fair	1		Removed
2007	Elm, American	8.5	Good	1		Removed
2027	Ash, green	14.0	Good	1		Removed
2047	Ironwood	8.5	Fair	1		Removed
2048	Ironwood	6.0	Good	1		Removed
2049	Oak, red	7.0	Good	1		Removed
2051	Elm, American	10.5	Good	1		Removed
2054	Ironwood	13.5	Fair	1		Removed
2055	Basswood	12.0	Good	1		Removed
2056	Basswood	6.0	Good	1		Removed
2057	Basswood	6.0	Good	1		Removed
2058	Ironwood	7.0	Good	2		Removed
2059	Maple, silver	6.0	Good	1		Removed
2060	Ironwood	6.0	Good	1		Removed
2061	Elm, American	9.0	Good	1		Removed
2062	Ironwood	8.0	Good	1		Removed
2063	Ironwood	9.0	Good	1		Removed
2064	Ash, green	18.5	Good	1		Removed
2065	Ash, green	21.0	Good	1		Removed
2067	Maple, sugar	8.5	Good	1		Removed
2068	Ironwood	6.0	Fair	1		Removed
2069	Maple, sugar	7.0	Good	1		Removed
2070	Maple, sugar	6.5	Good	1		Removed
2071	Maple, sugar	9.0	Good	1		Removed
2072	Maple, sugar	9.0	Good	1		Removed
2073	Maple, sugar	8.0	Good	1		Removed
2074	Ash, green	11.5	Good	1		Removed
2075	Hickory, bitternut	8.0	Good	1		Removed
2076	Hickory, bitternut	8.5	Good	1		Removed
2077	Hickory, bitternut	8.5	Good	1		Removed
2078	Hickory, bitternut	12.5	Good	1		Removed
2079	Hickory, bitternut	6.5	Good	1		Removed
2080	Ironwood	7.5	Good	1		Removed
2081	Maple, silver	11.0	Good	1		Removed
2082	Ash, green	8.5	Good	1		Removed
2083	Hickory, bitternut	9.0	Good	1		Removed
2084	Oak, red	25.0	Good	1		Removed
2085	Ash, green	14.0	Good	1		Removed
2086	Ash, green	10.0	Good	1		Removed
2087	Ash, green	18.0	Good	1		Removed
2088	Redcedar	8.0	Good	1		Removed
2089	Redcedar	5.0	Good	1		Removed
2090	Oak, red	8.0	Good	1		Removed
2091	Ash, green	17.0	Good	1		Removed
2092	Redcedar	7.0	Good	1		Removed
2093	Maple, sugar	6.5	Good	1		Removed
2094	Ash, green	12.0	Good	1		Removed
2095	Ash, green	6.5	Good	1		Removed
2096	Ash, green	11.0	Good	1		Removed
2097	Cherry, black	6.0	Good	1		Removed
2098	Ash, green	7.0	Good	1		Removed
2099	Ironwood	12.0	Good	2		Removed
2100	Ash, green	11.5	Fair	1		Removed
2101	Ironwood	12.0	Good	2		Removed
2102	Basswood	13.0	Good	1		Removed
2103	Maple, sugar	18.0	Good	1		Removed
2104	Maple, sugar	26.0	Good	1		Removed
2105	Ash, green	14.0	Good	1		Removed
2106	Maple, sugar	11.0	Good	1		Removed
2107	Ash, green	15.0	Good	1		Removed
2108	Redcedar	4.5	Fair	1		Removed
2109	Maple, sugar	6.5	Good	1		Removed
2110	Hickory, bitternut	12.0	Good	1		Removed
2111	Basswood	12.0	Good	1		Removed
2112	Oak, bur	22.0	Good	1		Removed
2113	Maple, sugar	7.5	Good	1		Removed
2114	Ash, green	7.5	Good	1		Removed
2115	Maple, sugar	10.0	Good	1		Removed
2116	Maple, sugar	6.0	Fair	1		Removed
2117	Redcedar	9.0	Good	1		Removed
2118	Ash, green	15.0	Good	1		Removed
2119	Ash, green	12.5	Good	1		Removed
2120	Ironwood	6.0	Good	1		Removed
2121	Ironwood	6.5	Good	1		Removed
2122	Ironwood	9.0	Good	1		Removed
2123	Ironwood	16.0	Good	1		Removed
2124	Elm, American	6.0	Good	1		Removed
2125	Ash, green	7.0	Good	1		Removed
2126	Ash, green	7.0	Fair	1		Removed
2127	Ironwood	8.0	Fair	1		Removed
2128	Ironwood	7.0	Fair	1		Removed
2129	Ash, green	6.5	Good	1		Removed
2130	Maple, sugar	7.0	Good	1		Removed
2131	Ironwood	9.5	Good	1		Removed
2132	Ash, green	17.5	Good	1		Removed
2133	Maple, sugar	8.5	Good	1		Removed
2134	Ironwood	6.0	Good	1		Removed
2135	Ironwood	9.0	Good	2		Removed
2136	Ash, green	21.5	Good	1		Removed
2137	Ash, green	22.0	Good	1		Removed
2138	Ironwood	6.5	Good	1		Removed
2139	Ash, green	14.5	Good	1		Removed
2140	Ash, green	13.0	Good	1		Removed
2141	Elm, American	8.5	Good	1		Removed
2142	Ash, green	22.0	Good	1		Removed
2143	Ash, green	18.0	Fair	1		Removed
2144	Ironwood	10.5	Good	1		Removed
2145	Ash, green	30.5	Good	1	Yes	Removed
2146	Ironwood	7.0	Good	1		Removed
2147	Ironwood	6.5	Good	1		Removed
2148	Ironwood	8.5	Good	1		Removed
2149	Elm, American	11.0	Good	1		Removed
2150	Elm, American	8.5	Good	1		Removed
2151	Ash, green	15.0	Good	1		Removed
2152	Ash, green	10.0	Good	1		Removed
2153	Elm, American	13.0	Good	1		Removed
2154	Elm, American	7.0	Good	1		Removed
2155	Elm, American	6.0	Good	1		Removed
2156	Ash, green	6.5	Good	1		Removed
2157	Ash, green	6.5	Good	1		Removed
2158	Elm, American	7.0	Good	1		Removed
2159	Cherry, black	8.0	Good	1		Removed
2160	Oak, red	15.5	Good	1		Removed
2161	Redcedar	12.0	Good	1		Removed
2162	Ironwood	6.5	Fair	1		Removed
2163	Boxelder	7.0	Good	1		Removed
2164	Elm, American	9.0	Good	1		Removed
2165	Ironwood	6.0	Good	1		Removed
2166	Ironwood	6.0	Good	1		Removed
2167	Ash, green	15.0	Good	1		Removed
2168	Ash, green	15.0	Good	1		Removed
2169	Ironwood	6.0	Good	1		Removed
2170	Ironwood	6.0	Good	1		Removed

TREE #	SPECIES	CAL. IN.	COND.	STEMS	SPECIMAN	STATUS
2171	Ash, green	8.0	Good	1		Removed
2172	Ash, green	6.5	Fair	1		Removed
2173	Elm, American	8.0	Good	1		Removed
2174	Elm, American	9.5	Good	1		Removed
2175	Maple, sugar	10.5	Good	1		Removed
2176	Ash, green	15.0	Good	1		Removed
2177	Ironwood	8.0	Fair	1		Removed
2178	Ironwood	18.0	Fair	2		Removed
2179	Ironwood	8.5	Good	1		Removed
2180	Ash, green	8.5	Good	1		Removed
2181	Ash, green	6.5	Good	1		Removed
2182	Ash, green	17.5	Good	1		Removed
2183	Ironwood	6.0	Good	1		Removed
2184	Maple, sugar	10.0	Good	1		Removed
2185	Maple, sugar	7.0	Good	1		Removed
2186	Oak, red	10.5	Good	1		Removed
2187	Oak, red	6.0	Good	1		Removed
2188	Maple, sugar	8.0	Good	1		Removed
2189	Elm, American	7.0	Good	1		Removed
2190	Maple, silver	10.5	Good	1		Removed
2191	Maple, silver	13.0	Good	1		Removed
2192	Ironwood	11.0	Fair	1		Removed
2193	Ash, green	6.0	Good	1		Removed
2194	Basswood	9.5	Good	1		Removed
2195	Ironwood	26.0	Fair	3		Removed
2196	Ash, green	13.5	Good	1		Removed
2197	Ash, green	12.0	Good	1		Removed
2198	Ash, green	6.0	Good	1		Removed
2199	Maple, sugar	8.0	Good	1		Removed
2200	Maple, silver	11.5	Good	1		Removed
2201	Maple, sugar	8.0	Good	1		Removed
2202	Maple, silver	10.5	Good	1		Removed
2203	Ironwood	6.0	Good	1		Removed
2204	Ash, green	11.5	Good	1		Removed
2205	Ash, green	14.5	Good	1		Removed
2206	Elm, American	6.5	Good	1		Removed
2207	Ash, green	7.5	Good	1		Removed
2208	Ash, green	6.5	Good	1		Removed
2209	Basswood	7.0	Good	1		Removed
2210	Ash, green	6.5	Good	1		Removed
2211	Ash, green	8.5	Good	1		Removed
2212	Ash, green	12.5	Good	1		Removed
2213	Redcedar	4.0	Fair	1		Removed
2214	Ironwood	12.0	Fair	3		Removed
2215	Ash, green	9.5	Good	1		Removed
2216	Ash, green	12.5	Good	1		Removed
2217	Ash, green	11.0	Good	1		Removed
2218	Ash, green	16.0	Good	2		Removed
2219	Ash, green	11.0	Fair	1		Removed
2220	Ash, green	6.5	Good	1		Removed
2221	Elm, American	7.0	Good	1		Removed
2222	Ash, green	12.5	Good	1		Removed
2223	Ash, green	15.0	Good	1		Removed
2224	Ash, green	10.5	Fair	1		Removed
2225	Maple, sugar	7.0	Good	1		Removed
2226	Maple, sugar	6.5	Good	1		Removed
2227	Ironwood	10.5	Good	1		Removed
2228	Ironwood	6.5	Good	1		Removed
2229	Basswood	14.5	Good	1		Removed
2230	Basswood	29.0	Good	1		Saved
2231	Maple, sugar	8.0	Good	1		Saved
2232	Maple, sugar	6.0	Good	1		Removed
2233	Maple, sugar	23.0	Fair	1		Removed
2234	Ash, green	8.5	Good	1		Removed
2235	Ash, green	7.0	Good	1		Removed
2236	Ash, green	7.5	Good	1		Removed
2237	Ash, green	8.0	Good	1		Removed
2238	Ash, green	8.5	Good	1		Removed
2239	Ash, green	10.5	Good	1		Removed
2240	Ash, green	13.5	Good	1		Removed
2241	Ash, green	9.5	Good	1		Removed
2242	Maple, sugar	6.0	Good	1		Removed
2243	Basswood	12.5	Fair	1		Removed
2244	Ash, green	13.0	Good	1		Removed
2245	Ash, green	22.0	Good	1		Removed
2246	Maple, sugar	8.5	Fair	1		Removed
2247	Ash, green	10.5	Good	1		Removed
2248	Ash, green	8.0	Good	1		Removed
2249	Ash, green	6.0	Good	1		Removed
2250	Maple, silver	9.5	Good	1		Removed
2251	Ash, green	10.0	Good	1		Removed
2252	Ash, green	6.0	Good	1		Removed
2253	Ash, green	11.0	Good	1		Removed
2254	Elm, American	7.0	Good	1		Removed
2255	Maple, sugar	6.5	Good	1		Removed
2256	Elm, American	7.5	Fair	1		Removed
2257	Oak, red	9.0	Good	1		Removed
2258	Elm, American	7.0	Good	1		Removed
2259	Ash, green	7.0	Good	1		Removed
2260	Ash, green	10.0	Good	1		Removed
2261	Ironwood	7.0	Good	1		Removed
2262	Ironwood	6.5	Good	1		Removed
2263	Ironwood	10.0	Good	1		Removed
2264	Ironwood	9.0	Fair	1		Removed
2265	Ash, green	7.0	Good	1		Removed
2266	Ash, green	6.5	Good	1		Removed
2267	Ash, green	28.0	Good	1		Removed
2268	Maple, sugar	21.0	Fair	1		Saved
2269	Maple, sugar	7.0	Good	1		Removed
2270	Maple, sugar	7.5	Good	1		Removed
2271	Maple, sugar	13.0	Good	1		Removed
2272	Maple, sugar	17.0	Good	1		Removed
2273	Maple, sugar	8.5	Good	1		Removed
2274	Maple, sugar	8.0	Fair	1		Removed
2275	Oak, white	29.0	Good	1		Removed
2276	Oak, red	43.0	Good	1	Yes	Removed
2277	Maple, sugar	27.0	Fair	1		Removed
2278	Maple, sugar	26.0	Good	1		Removed
2279	Maple, sugar	26.0	Good	1		Removed
2280	Ironwood	6.5	Good	1		Removed
2281	Elm, American	6.5	Good	1		Removed
2282	Elm, American	6.0	Good	1		Removed
2283	Maple, sugar	6.5	Fair	1		Removed
2284	Ash, green	14.5	Good	1		Removed
2285	Cherry, black	7.0	Fair	1		Removed
2286	Ash, green	17.5	Good	1		Removed
2287	Ash, green	7.0	Good	1		Removed
2288	Ash, green	13.5	Good	1		Removed
2289	Basswood	6.5	Good	1		Removed
2290	Maple, sugar	28.0	Good	1		Removed
2291	Ash, green	14.5	Good	1		Removed
2292	Ash, green	12.0	Good	1		Removed
2293	Basswood	29.5	Fair	1		Removed
2294	Ironwood	7.5	Good	1		Removed
2295	Maple, sugar	19.5	Good	1		Removed
2296	Maple, sugar	19.5	Fair	1		Removed
2297	Maple, sugar	19.5	Good	1		Removed
2298	Oak, bur	21.0	Good	1		Removed

TREE #	SPECIES	CAL. IN.	COND.	STEMS	SPECIMAN	STATUS
2299	Ash, green	13.0	Fair	1		Removed
2300	Oak, white	29.5	Good	1		Removed
2301	Crabapple	7.0	Good	1		Removed
2302	Ironwood	8.0	Good	1		Removed
2303	Ironwood	7.5	Good	1		Removed
2304	Ironwood	6.0	Good	1		Removed
2305	Aspen	7.0	Good	1		Removed
2306	Aspen	8.0	Good	1		Removed
2307	Aspen	7.5	Good	1		Removed
2308	Aspen	7.5	Good	1		Removed
2309	Oak, red	12.5	Good	1		Removed
2310	Ironwood	10.0	Good	2		Removed
2311	Ironwood	9.0	Fair	1		Removed
2312	Ash, green	13.0	Good	1		Removed
2313	Ironwood	7.5	Good	1		Removed
2314	Ash, green	15.5	Good	1		Removed
2315	Ash, green	16.0	Good	1		Removed
2316	Ash, green	11.5	Good	1		Removed
2317	Ironwood	6.0	Good	1		Removed
2318	Ironwood	9.0	Good	1		Removed
2319	Ironwood	9.5	Good	1		Removed
2320	Aspen	9.0	Good	1		Removed
2321	Aspen	8.0	Good	1		Removed
2322	Aspen	6.0	Good	1		Removed
2323	Aspen	10.0	Good	1		Removed
2324	Oak, red	27.0	Good	1		Removed
2325	Ironwood	16.0	Fair	2		Removed
2326	Aspen	7.0	Good	1		Removed
2327	Aspen	11.5	Good	1		Removed
2328	Aspen	6.0	Good	1		Removed
2329	Aspen	12.5	Good	1		Removed
2330	Aspen	11.5	Good	1		Removed
2331	Aspen	9.0	Good	1		Removed
2332	Aspen	10.5	Fair	1		Removed
2333	Ash, green	16.5	Fair	4		Removed
2334	Ash, green	9.0	Good	2		Removed
2335	Aspen	6.0	Good	1		Removed
2336	Ash, green	11.0	Fair	2		Removed
2337	Aspen	6.0	Good	1		Removed
2338	Aspen	7.5	Good	1		Removed
2339	Oak, red	17.5	Good	1		Removed
2340	Ash, green	13.5	Good	1		Removed
2341	Hickory, bitternut	13.0	Good	1		Removed
2342	Elm, Siberian	16.5	Good	1		Removed
2343	Ironwood	18.0	Good	1		Removed
2344	Hickory, bitternut	18.5	Fair	1		Removed
2345	Ironwood	9.0	Good	1		Removed
2346	Ash, green	20.0	Good	1		Removed
2347	Aspen	10.0	Good	1		Removed
2348	Aspen	10.5	Good	1		Removed
2349	Aspen	8.0	Good	1		Removed
2350	Aspen	10.5	Good	1		Removed
2351	Aspen	9.5	Good	1		Removed
2352	Aspen	6.0	Good	1		Removed
2353	Aspen	10.5	Good	1		Removed
2354	Aspen	9.5	Good	1		Removed
2355	Ironwood	9.5	Good	1		Removed
2356	Aspen	6.5	Good	1		Removed
2357	Aspen	6.0	Good	1		Removed
2358	Aspen	9.0	Good	1		Removed
2359	Aspen	6.0	Good	1		Removed
2360	Aspen	7.5	Good	1		Removed
2361	Elm, red	6.5	Good	1		Removed
2362	Elm, red	8.0	Good	1		Removed
2363	Ironwood	9.0	Good	1		Removed
2364	Ironwood	7.0	Good	1		Removed
2365	Elm, American	12.0	Good	1		Removed
2366	Ironwood	12.5	Good	1		Removed
2367	Ash, green	15.5	Good	1		Removed
2368	Elm, Siberian	8.5	Good	1		Removed
2369	Basswood	28.0	Good	1		Removed
2370	Oak, red	30.0	Good	1	Yes	Removed
2371	Elm, Siberian	7.0	Good	1		Removed
2372	Basswood	40.5	Good	1	Yes	Removed
2373	Elm, red	8.0	Good	1		Removed
2374	Maple, sugar	24.5	Good	1		Removed
2375	Ash, green	11.5	Good	1		Removed
2376	Ash, green	6.5	Good	1		Removed
2377	Ash, green	10.5	Good	1		Removed
2378	Ash, green	15.0	Good	1		Removed
2379	Ash, green	20.0	Good	1		Removed
2380	Ash, green	16.0	Good	1		Removed
2381	Ash, green	20.0	Good	1		Removed
2382	Maple, sugar	6.0	Good	1		Removed
2383	Ash, green	6.5	Good	1		Removed
2384	Maple, sugar	10.5	Good	1		Removed
2385	Maple, sugar	9.0	Good	1		Removed
2386	Ash, green	8.5	Good	1		Removed
2387	Hickory, bitternut	9.5	Good	1		Removed
2388	Maple, sugar	6.0	Good	1		Removed
2389	Maple, sugar	6.0	Good	1		Removed
2390	Ash, green	9.0	Good	1		Removed
2391	Hickory, bitternut	8.5	Good	1		Removed
2392	Ironwood	8.0	Good	1		Removed
2393	Ash, green	10.0	Good	1		Removed
2394	Oak, white	27.0	Good	1		Removed
2395	Elm, American	9.5	Good	1		Removed
2396	Maple, sugar	23.5	Good	1		Removed
2397	Maple, sugar	8.0	Fair	1		Removed
2398	Oak, white	19.0	Fair	1		Saved
2399	Oak, white	23.0	Good	1		Removed
2401	Maple, sugar	6.0	Good	1		Removed
2402	Ironwood	6.0	Good	1		Removed
2403	Oak, white	21.5	Good	1		Removed
2404	Maple, sugar	18.0	Good	1		Removed
2405	Maple, sugar	20.5	Good	1		Removed
2406	Maple, sugar	24.0	Good	1		Removed
2407	Ironwood	6.0	Good	1		Removed
2408	Basswood	14.0	Good	1		Removed
2409	Ironwood	6.5	Good	1		Removed
2410	Ironwood	8.0	Good	1		Removed
2411	Oak, red	11.0	Good	1		Removed
2412	Ash, green	17.0	Fair	1		Removed
2413	Maple, sugar	7.0	Good	1		Removed
2414	Elm, American	11.0	Good	1		Removed
2415	Maple, sugar	7.0	Good	1		Removed
2416	Maple, sugar	6.0	Good	1		Removed
2417	Ash, green	8.5	Fair	1		Removed
2418	Basswood	13.0	Good	1		Removed
2419	Oak, red	16.0	Good	1		Removed
2420	Maple, sugar	10.0	Good	1		Removed
2421	Hickory, bitternut	9.0	Fair	1		Removed
2422	Ironwood	10.5	Fair	1		Removed
2423	Ash, green	12.0	Good	1		Removed
2424	Maple, sugar	29.0	Fair	1		Removed
2425	Maple, sugar	13.5	Good	1		Removed
2426	Elm, American	8.0	Good	1		Removed
2427	Maple, sugar	23.0	Good	1		Removed

TREE #	SPECIES	CAL. IN.	COND.	STEMS	SPECIMAN	STATUS
2428	Elm, American	8.5	Good	1		Removed
2429	Maple, sugar	28.0	Good	1		Removed
2430	Elm, American	10.0	Good	1		Removed
2431	Elm, American	12.5	Good	1		Removed
2432	Elm, American	6.0	Fair	1		Removed
2433	Hickory, bitternut	8.5	Good	1		Removed
2434	Ash, green	17.0	Good	1		Removed
2435	Basswood	30.0	Fair	1	Yes	Removed
2436	Ironwood	7.5	Fair	1		Removed
2437	Ash, green	12.5	Good	1		Removed
2438	Ash, green	9.0	Good	1		Removed
2439	Ironwood	15.0	Fair	1		Removed
2440	Maple, sugar	25.5	Fair	1		Removed
2441	Basswood	29.5	Good	1		Removed
2442	Basswood	7.0	Fair	1		Removed
2443	Elm, Siberian	7.0	Good	1		Removed
2444	Hickory, bitternut	10.5	Good	1		Removed
2445	Ash, green	9.5	Good	1		Removed
2446	Hickory, bitternut	7.5	Good	1		Removed
2447	Elm, red	9.5	Good	1		Removed
2448	Hickory, bitternut	9.5	Good	1		Removed
2449	Ash, green	14.0	Good	1		Removed
2450	Hickory, bitternut	6.0	Good	1		Removed
2451	Ash, green	18.0	Good	1		Removed
2452	Elm, American	7.0	Good	1		Removed
2453	Elm, American	8.0	Good	1		Removed
2454	Elm, American	6.5	Good	1		Removed
2455	Hickory, bitternut	7.0	Good	1		Removed
2456	Hickory, bitternut	14.0	Fair	2		Removed
2457	Ash, green	8.0	Fair	1		Removed
2458	Maple, sugar	20.0	Good	1		Removed
2459	Maple, sugar	21.0	Good	1		Removed
2460	Maple, sugar	19.5	Good	1		Removed
2461	Hickory, bitternut	7.0	Good	1		Removed
2462	Maple, sugar	30.0	Fair	1	Yes	Removed
2463	Oak, white	19.5	Good	1		Removed
2464	Oak, red	33.5	Good	1	Yes	Removed
2465	Elm, American	7.0	Good	1		Removed
2466	Ironwood	7.5	Good	1		Removed
2467	Ash, green	10.5	Good	1		Removed
2468	Ironwood	6.5	Good	1		Removed
2469	Ash, green	10.0	Good	1		Removed
2470	Ironwood	7.0	Good	1		Removed
2471	Ironwood	8.5	Good	1		Removed
2472	Oak, red	35.0	Good	1	Yes	Removed
2473	Ash, green	11.0	Good	1		Removed
2474	Oak, red	32.0	Good	1	Yes	Removed
2475	Ironwood	9.5	Fair	1		Removed
2476	Ash, green	8.5	Good	1		Removed
2477	Ash, black	9.5	Good	1		Removed
2478	Ash, black	16.5	Good	1		Removed
2479	Ash, black	8.5	Good	1		Removed
2480	Ash, black	9.5	Good	1		Removed
2481	Ash, black	11.0	Good	1		Removed
2482	Ash, black	9.0	Good	1		Removed
2483	Hickory, bitternut	13.5	Good	1		Removed
2484	Elm, American	6.0	Fair	1		Removed
2485	Ash, green	8.0	Good	1		Removed
2486	Ash, green	12.0	Good	1		Removed
2487	Ash, green	7.0	Good	1		Removed
2488	Ironwood	18.0	Fair	2		Removed
2489	Hickory, bitternut	7.0	Good	1		Removed
2490	Ash, green	16.0	Good	1		Removed
2491	Hickory, bitternut	6.0	Good	1		Removed
2492	Ash, green	21.0	Good	1		Removed
2493	Hickory, bitternut	8.5	Good	1		Removed
2494	Elm, American	11.5	Fair	1		Removed
2495	Elm, American	7.0	Good	1		Removed
2496	Elm, American	6.5	Good	1		Removed
2497	Hickory, bitternut	7.5	Good	1		Removed
2498	Elm, American	6.5	Good	1		Removed
2499	Elm, American	7.0	Good	1		Removed
2500	Basswood	9.0	Good	1		Removed
2501	Elm, American	8.0	Good	1		Removed
2502	Hickory, bitternut	6.0	Good	1		Removed
2503	Oak, red	32.5	Fair	1	Yes	Removed
2504	Maple, sugar	22.5	Good	1		Removed
2505	Maple, sugar	12.0	Fair	1		Removed
2506	Hickory, bitternut	9.0	Good	1		Removed
2507	Ash, green	19.0	Good	1		Removed
2508	Ash, green	16.0	Fair	1		Removed
2509	Ash, green	12.0	Good	1		Removed
2510	Maple, red	10.0	Good	1		Removed
2511	Ironwood	7.0	Good	1		Removed
2512	Ironwood	7.0	Good	1		Removed
2513	Oak, white	34.5	Good	1	Yes	Removed
2514	Elm, American	9.5	Good	1		Removed
2515	Ash, green	11.0	Fair	1		Removed
2516	Maple, sugar	10.5	Good	1		Removed
2517	Hackberry	12.0	Good	1		Removed
2518	Maple, sugar	8.0	Good	1		Removed
2519	Ironwood	7.5	Good	1		Removed
2520	Maple, sugar	10.0	Good	1		Removed
2521	Maple, sugar	22.0	Good	1		Removed
2522	Maple, sugar	15.5	Good	1		Removed
2523	Maple, sugar	15.0	Good	1		Removed
2524	Maple, sugar	11.0	Fair	1		Removed
2525	Basswood	9.5	Good	1		Removed
2526	Maple, sugar	23.0	Good	1		Removed
2527	Basswood	13.5	Good	1		Removed
2528	Maple, sugar	24.0	Fair	1		Removed
2529	Basswood	26.0	Good	1		Removed
2530	Ironwood	8.0	Good	1		Removed
2531	Basswood	22.5	Good	1		Removed
2532	Basswood	15.0	Good	1		Removed
2533	Basswood	9.5	Fair	1		Removed
2534	Elm, American	8.0	Good	1		Removed
2535	Maple, sugar	19.0	Good	1		Removed
2536	Oak, red	26.0	Good	1		Removed
2537	Maple, sugar	15.5	Good	1		Removed
2538	Elm, American	9.5	Good	1		Removed
2539	Hickory, bitternut	8.0	Good	1		Removed
2540	Hickory, bitternut	6.5	Good	1		Removed
2541	Basswood	36.0	Fair	2		Removed
2542	Elm, red	7.5	Good	1		Removed
2543	Hickory, bitternut	6.5	Good	1		Removed
2544	Maple, sugar	9.0	Good	1		Removed
2545	Hickory, bitternut	6.5	Good	1		Removed
2546	Ash, green	14.5	Fair	1		Removed
2547	Hickory, bitternut	8.5	Good	1		Removed
2548	Redcedar	4.5	Good	1		Removed
2549	Basswood	27.0	Good	1		Removed
2550	Ash, green	7.0	Good	1		Removed
2551	Ash, green	16.5	Good	1		Removed
2552	Basswood	7.5	Good	1		Removed
2553	Basswood	6.5	Good	1		Removed
2554	Ash, green	10.0	Good	1		Removed
2555	Oak, bur	24.0	Good	1		Removed

TREE #	SPECIES	CAL. IN.	COND.	STEMS	SPECIMAN	STATUS
2556	Redcedar	8.5	Good	1		Removed
2557	Ash, green	6.0	Good	1		Removed
2558	Maple, silver	28.0	Fair	1		Removed
2559	Elm, American	12.5	Good	1		Removed
2560	Ash, green	6.5	Good	1		Removed
2561	Maple, sugar	8.0	Good	1		Removed
2562	Hickory, bitternut	11.0	Good	1		Removed
2563	Ash, green	14.5	Good	1		Removed
2564	Elm, American	6.5	Good	1		Removed
2565	Ash, green	26.0	Fair	1		Removed
2566	Elm, American	7.5	Fair	1		Removed
2567	Ash, green	26.5	Good	1		Removed
2568	Maple, silver	27.0	Fair	1		Removed
2569	Ash, green	21.0	Good	1		Removed
2570	Elm, American	8.0	Good	1		Removed
2571	Maple, silver	17.6	Good	1		Removed
2572	Maple, silver	27.0	Fair	1		Removed
2573	Elm, American	7.0	Good	1		Removed
2574	Ash, green	9.5	Good	1		Removed
2575	Hickory, bitternut	9.5	Good	1		Removed
2576	Hackberry	8.5	Good	1		Saved
2577	Ash, green	7.5	Good	1		Removed
2578	Elm, American	10.0	Good	1		Saved
2579	Hickory, bitternut	7.0	Good	1		Saved
2580	Oak, red	9.5	Good	1		Saved
2581	Oak, white	31.0	Good	1	Yes	Saved
2582	Oak, bur	26.5	Good	1		Saved
2583	Ash, green	8.0	Good	1		Removed
2587	Ash, black	6.5	Good	1		Removed
2589	Ash, green	8.5	Good	1		Saved
2590	Ash, green	14.5	Good	1		Saved
2591	Maple, silver	20.0	Fair	1		Saved
2592	Ash, green	8.0	Fair	1		Saved
2593	Ash, green	7.0	Good	1		Removed
2595	Elm, American	7.0	Good	1		Removed
2597	Ash, green	20.0	Good	1		Saved
2598	Ironwood	7.5	Good	1		Removed
2599	Maple, sugar	8.0	Good	1		Removed
2600	Hickory, bitternut	8.5	Good	1		Removed
2601	Maple, sugar	6.5	Fair	1		Removed
2602	Hickory, bitternut	6.5	Good	1		Removed
2603	Elm, American	7.5	Good	1		Removed
2604	Ironwood	9.5	Fair	1		Removed
2605	Hickory, bitternut	8.0	Good	1		Saved
2606	Maple, sugar	28.5	Good	1		Removed
2607	Elm, American	7.0	Fair	1		Removed
2608	Ash, green	7.5	Good	1		Removed
2609	Ash, green	8.0	Good	1		Removed
2610	Ash, green	6.5	Good	1		Removed
2611	Maple, sugar	6.0	Good	1		Removed
2612	Basswood	14.5	Fair	2		Removed
2613	Ash, green	13.5	Good	1		Removed
2614	Ironwood	6.5	Good	1		Removed
2615	Ironwood	6.5	Good	1		Removed
2616	Oak, red	17.5	Good	1		Removed
2617	Basswood	12.0	Good	1		Saved
2618	Basswood	10.0	Good	1		Saved
2619	Ash, green	7.0	Good	1		Removed
2620	Hickory, bitternut	6.5	Good	1		Removed
2621	Ash, green	6.0	Good	1		Removed
2622	Ash, green	6.5	Good	1		Removed
2623	Ash, green	6.0	Good	1		Removed
2624	Maple, sugar	13.5	Good	1		Removed
2625	Ironwood	6.0	Good	1		Saved
2626	Ironwood	7.0	Good	1		Removed
2627	Ash, green	7.0	Good	1		Removed
2628	Hickory, bitternut	11.5	Good	1		Removed
2629	Oak, white	35.0	Good	1	Yes	Removed
2630	Basswood	23.5	Fair	1		Removed
2631	Oak, white	22.0	Good	1		Removed
2632	Ash, green	23.0	Fair	1		Removed
2633	Elm, American	7.5	Good	1		Removed
2634	Elm, American	7.5	Good	1		Removed
2635	Maple, sugar	30.0	Fair	1	Yes	Removed
2636	Elm, American	7.0	Good	1		Removed
2637	Elm, American	13.5	Good	1		Removed
2638	Elm, American	7.5	Good	1		Removed
2639	Elm, American	7.0	Good	1		Removed
2640	Ash, green	16.5	Good	1		Removed
2641	Ash, green	9.5	Good	1		Removed
2642	Maple, sugar	32.5	Good	1	Yes	Removed
2643	Oak, red	28.0	Fair	1		Removed
2644	Ash, green	11.5	Good	1		Removed
2645	Elm, American	9.0	Good	1		Removed
2646	Maple, sugar	10.5	Fair	1		Removed
2647	Elm, American	6.5	Good	1		Removed
2648	Ash, green	13.0	Good	1		Removed
2649	Elm, American	12.0	Good	1		Removed
2650	Maple, silver	27.0	Fair	1		Saved
2651	Maple, silver	30.0	Good	1	Yes	Saved
2652	Maple, silver	34.0	Fair	1	Yes	Saved
2653	Ash, green	7.5	Good	1		Saved
2654	Ash, green	8.5	Good	1		Saved
2655	Ash, green	6.5	Good	1		Saved
2656	Ash, green	7.5	Fair	1		Saved
2657	Ash, green	10.5	Good	1		Saved
2658	Ash, green	6.5	Fair	1		Saved
2659	Ash, green	12.5	Good	1		Saved
2660	Ash, green	10.5	Good	1		Saved
2661	Elm, American	11.5	Good	1		Saved
2662	Ash, green	29.0	Good	1		Saved
2663	Redcedar	10.0	Good	2		Saved
2664	Ash, green	29.0	Good	1		Saved
2665	Maple, red	22.0	Good	1		Saved
2666	Maple, sugar	18.0	Good	1		Saved
2667	Maple, sugar	18.0	Good	1		Saved
2668	Maple, sugar	21.0	Fair	1		Saved
2669	Ash, green	8.0	Good	1		Removed
2670	Elm, American	6.0	Good	1		Removed
2671	Basswood	29.0	Fair	1		Removed
2672	Redcedar	6.5	Fair	1		Saved
2673	Redcedar	8.0	Good	1		Removed
2674	Maple, sugar	29.5	Fair	1		Removed
2675	Oak, red	31.0	Good	1	Yes	Removed
2676	Ash, green	6.5	Good	1		Removed
2677	Hickory, bitternut	6.0	Good	1		Removed
2678	Ash, green	6.0	Good	1		Removed
2679	Ash, green	6.5	Good	1		Removed
2680	Basswood	7.5	Good	1		Removed
2681	Maple, sugar	7.5	Good	1		Removed
2682	Maple, red	11.0	Good	1		Removed
2683	Oak, red	28.0	Good	1		Removed
2684	Hickory, bitternut	7.5	Good	1		Removed
2685	Elm, American	6.5	Good	1		Removed
2686	Ash, green	7.5	Good	1		Removed
2687	Elm, American	7.0	Good	1		Removed
2688	Hickory, bitternut	8.5	Good	1		Removed
2689	Oak, red	6.5	Good	1		Removed

TREE #	SPECIES	CAL. IN.	COND.	STEMS	SPECIMAN	STATUS
2690	Oak, white	25.0	Good	1		Saved
2691	Ash, green	8.5	Good	1		Removed
2692	Basswood	62.0	Fair	5		Saved
2693	Ash, green	33.0	Good	1	Yes	Saved
2694	Ash, green	7.0	Good	1		Removed
2695	Elm, American	7.0	Good	1		Saved
2696	Ash, green	6.0	Good	1		Saved
2697	Ash, green	7.5	Good	1		Saved
2698	Maple, silver	31.0	Fair	1	Yes	Saved
2699	Ash, green	6.5	Fair	1		Saved
2700	Ash, green	7.0	Good	1		Saved
2701	Elm, American	10.0	Good	1		Saved
2702	Ash, green	10.5	Good	1		Saved
2703	Ash, green	6.0	Fair	1		Removed
2704	Ash, green	26.0	Fair	5		Removed
2705	Ash, green	20.0	Fair	4		Removed
2706	Elm, American	7.5	Good	1		Removed
2707	Ash, green	11.0	Fair	2		Removed
2708	Ash, green	8.0	Fair	1		Removed
2709	Ash, green	24.0	Fair	5		Removed
2710	Ash, green	19.0	Fair	3		Removed
2711	Ash, green	9.0	Fair	2		Removed
2712	Ash, green	6.0	Good	1		Removed
2713	Elm, American	14.0	Fair	1		Removed
2714	Willow	10.5	Good	1		Removed
2715	Maple, red	12.0	Fair	1		Removed
2716	Elm, American	11.0	Good	1		Removed
2717	Ash, green	21.0	Good	1		Removed
2718	Elm, American	12.5	Good	1		Removed
2719	Ironwood	10.0	Good	1		Removed
2720	Ash, green	17.0	Good	1		Removed
2721	Ash, green	15.0	Good	1		Removed
2722	Ash, green	16.0	Good	1		Removed
2723	Ironwood	13.5	Good	1		Removed
2724	Ash, green	19.5	Good	1		Removed
2725	Ash, green	21.5	Good	1		Removed
2726	Ash, green	10.5	Good	1		Removed
2727	Ash, green	8.5	Fair	1		Removed
2728	Ash, black	17.5	Fair	1		Removed
2729	Ironwood	6.5	Good	1		Removed
2730	Hickory, bitternut	8.0	Good	1		Removed
2731	Ironwood	9.0	Good	1		Removed
2732	Ironwood	11.0	Fair	1		Removed
2733	Ash, green	6.0	Good	1		Removed
2734	Ash, green	10.5	Good	1		Removed
2735	Ironwood	10.0	Good	1		Removed
2736	Ash, green	19.0	Good	1		Removed
2737	Basswood	12.0	Good	2		Removed
2738	Ironwood	6.0	Good	1		Removed
2739	Ironwood	9.0	Good	2		Removed
2740	Ironwood	12.0	Good	1		Removed
2741	Basswood	14.0	Good	1		Removed
2742	Ash, green	15.0	Good	1		Removed
2743	Ironwood	11.0	Good	1		Removed
2744	Ash, green	18.5	Good	1		Removed
2745	Ash, green	20.0	Good	1		Removed
2746	Elm, red	8.5	Good	1		Removed
2747	Ironwood	12.5	Good	1		Removed
2748	Ash, green	14.0	Good	1		Removed
2749	Elm, red	6.5	Good	1		Removed
2750	Ironwood	6.5	Good	1		Removed
2751	Maple, sugar	15.0	Fair	1		Removed
2752	Ash, green	12.0	Good	1		Removed
2753	Elm, American	7.5	Good	1		Removed
2754	Oak, red	40.0	Fair	1	Yes	Removed
2755	Ash, green	25.0	Good	1		Removed
2756	Ironwood	11.5	Good	1		Removed
2757	Maple, sugar	16.0	Good	1		Removed
2758	Ash, green	21.0	Good	1		Removed
2759	Ironwood	9.0	Good	1		Removed
2760	Ash, green	15.5	Good	1		Removed
2761	Elm, American	7.0	Good	1		Removed
2762	Ironwood	9.0	Good	1		Removed
2763	Ironwood	9.0	Good	1		Removed
2764	Maple, sugar	26.0	Good	1		Removed
2765	Ash, green	9.0	Good	1		Saved
2766	Elm, American	16.0	Good	1		Saved
2767	Oak, white	24.0	Good	1		Saved
2768	Elm, American	8.0	Good	1		Saved
2769	Elm, American	11.0	Good	1		Saved
2770	Ash, green	6.0	Fair	1		Saved
2771	Ash, green	7.0	Good	1		Saved
2772	Ash, green	6.0	Good	1		Saved
2773	Elm, American	8.5	Good	1		Saved
2774	Ash, green	7.0	Good	1		Saved
2775	Ash, green	6.5	Good	1		Saved
2776	Ash, green	6.0	Good	1		Saved
2777	Ash, green	9.0	Good	1		Saved
2778	Ash, green	6.5	Good	1		Saved
2779	Ash, green	8.5	Good	1		Saved
2780	Ash, green	8.0	Good	1		Saved
2781	Ash, green	7.5	Good	1		Saved
2782	Ash, green	6.5	Good	1		Saved
2783	Ash, green	9.0	Good	1		Saved
2784	Ash, green	11.0	Good	1		Saved
2785	Ash, green	6.5	Good	1		Saved
2786	Ash, green	6.0	Good	1		Saved
2787	Ash, green	6.5	Good	1		Saved
2788	Elm, American	7.5	Good	1		Saved
2789	Cherry, black	6.5	Fair	1		Saved
2791	Oak, bur	8.5	Fair	1		Saved
2792	Oak, red	6.0	Fair	1		Saved
2793	Basswood	6.5	Good	1		Saved
2794	Basswood	11.5	Good	1		Saved
2795	Oak, red	12.0	Good	1		Saved
2796	Oak, red	23.5	Good	1		Removed
2799	Oak, red	10.0	Fair	1		Saved
2800	Basswood	9.0	Good	1		Saved
2801	Ash, green	8.0	Good	1		Removed
2804	Basswood	16.0	Good	1		Saved
2805	Basswood	13.5	Good	1		Saved
2806	Elm, American	16.5	Good	1		Saved
2807	Ash, green	7.5	Good	1		Saved
2808	Ash, green	8.5	Good	1		Saved
2809	Oak, bur	6.5	Good	1		Saved
2810	Oak, bur	7.5	Good	1		Removed
2814	Ash, green	10.0	Good	1		Saved
2815	Elm, American	6.5	Fair	1		Saved
2816	Oak, bur	8.5	Good	1		Saved

CROW RIVER HEIGHTS WEST FUTURE ADD.

HANOVER, MN

BACKES COMPANIES
11413 ASHBURY CIRCLE N.
CHAMPLIN, MN 55316
PHONE: (612) 369-7750
FAX (612) 566-1525

LOUCKS
PLANNING
CIVIL ENGINEERING
LAND SURVEYING
LANDSCAPE ARCHITECTURE
ENVIRONMENTAL

7200 Hemlock Lane, Suite 300
Maple Grove, MN 55369
763.424.5505
www.loucksinc.com

CADD QUALIFICATION

CADD files prepared by the Consultant for this project are instruments of the Consultant professional services for use solely with respect to this project. These CADD files shall not be used on other projects, for additions to this project, or for completion of this project by others without written approval by the Consultant. With the Consultant's approval, others may be permitted to obtain copies of the CADD drawing files for information and reference only. All intentional or unintentional revisions, additions, or deletions to these CADD files shall be made at the full risk of that party making such revisions, additions or deletions and that party shall hold harmless and indemnify the Consultant from any & all responsibilities, claims, and liabilities.

SUBMITTAL/REVISIONS

04/20/18 CITY SUBMITTAL

PROFESSIONAL SIGNATURE

I hereby certify that this plan, specification or report was prepared by me or under my direct supervision and that I am a duly Licensed Professional Engineer under the laws of the State of Minnesota.

PRELIMINARY

License No. ... W. McLouth - PE 20383
Date

QUALITY CONTROL

Loucks Project No.	16101A
Project Lead	TWM
Drawn By	ZHW
Checked By	TWM
Review Date	04/02/18

SHEET INDEX

C0-1 COVER SHEET
C1-1 EXISTING CONDITIONS
C1-2 PRELIMINARY PLAT
C2-0 - C2-2 SITE PLAN
C3-0 - C3-2 GRADING PLAN
C3-3 - C3-5 SWPPP PLAN & NOTES
C4-0 - C4-2 UTILITY PLAN
C8-1 - C8-2 DETAILS
L0-1 - L0-3 TREE PRESERVATION
L0-4 TREE INVENTORY
L1-1 - L1-2 LANDSCAPE PLANS
L2-1 LANDSCAPE DETAILS

TREE INVENTORY

L0-4

Plotted: 04 /18 / 2018 10:36 AM W:\2016\16101A\CADD DATA\LANDSCAPE_dwg Sheet Files - 4-6 Addition\L16101A L0-4 Tree Inventory

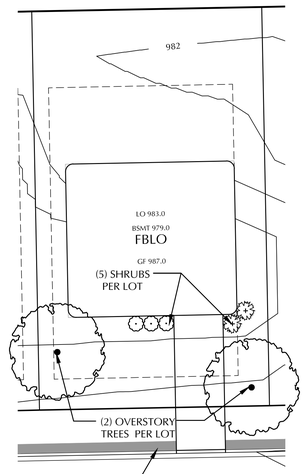

TYPICAL LOT LANDSCAPE PLAN

LANDSCAPE LEGEND

- SIDE SLOPE TREES
- NATIVE SEED MIX - MNDOT MIX 33-261
- 36" SOD STRIP ALONG NEW CURBS OVER 4" DEPTH TOPSOIL

LANDSCAPE NOTES

1. POND SLOPE TREES WILL BE PLANTED AT TIME OF GRADING AND ROAD CONSTRUCTION. LOT TREES AND SHRUBS WILL BE PLANTED AT TIME OF BUILDING CONSTRUCTION

2. TREE RESTORATION WILL BE APPLIED AT TIME OF PHASED TREE REMOVAL BASED ON DEVELOPMENT SCHEDULE.

PLANTING REQUIREMENTS - NORTH		TOTAL REQ'D	TOTAL PROPOSED
POND SLOPE TREES - 12 TREES PER 1 ACRE	2.21 ACRE	27	27
LOT TREES - 2 PER LOT	100 LOTS	200	200
LOT SHRUBS - 5 PER LOT	100 LOTS	500	500

CALL BEFORE YOU DIG!
Gopher State One Call
TWIN CITY AREA: 651-454-0002
TOLL FREE: 1-800-252-1166

WARNING:

THE CONTRACTOR SHALL BE RESPONSIBLE FOR CALLING FOR LOCATIONS OF ALL EXISTING UTILITIES. THEY SHALL COOPERATE WITH ALL UTILITY COMPANIES IN MAINTAINING THEIR SERVICE AND / OR RELOCATION OF LINES.

THE CONTRACTOR SHALL CONTACT GOPHER STATE ONE CALL AT 651-454-0002 AT LEAST 48 HOURS IN ADVANCE FOR THE LOCATIONS OF ALL UNDERGROUND WIRES, CABLES, CONDUITS, PIPES, MANHOLES, VALVES OR OTHER BURIED STRUCTURES BEFORE DIGGING. THE CONTRACTOR SHALL REPAIR OR REPLACE THE ABOVE WHEN DAMAGED DURING CONSTRUCTION AT NO COST TO THE OWNER.

CROW RIVER HEIGHTS WEST FUTURE ADD.

HANOVER, MN

BACKES COMPANIES
11413 ASHBURY CIRCLE N.
CHAMPLIN, MN 55316
PHONE: (612) 369-7750
FAX (612) 566-1525

LOUCKS
PLANNING
CIVIL ENGINEERING
LAND SURVEYING
LANDSCAPE ARCHITECTURE
ENVIRONMENTAL
7200 Hemlock Lane, Suite 300
Maple Grove, MN 55369
763.424.5505
www.loucksinc.com

CADD QUALIFICATION

CADD files prepared by the Consultant for this project are instruments of the Consultant professional services for use solely with respect to this project. These CADD files shall not be used on other projects, for additions to this project, or for completion of this project by others without written approval by the Consultant. With the Consultant's approval, others may be permitted to obtain copies of the CADD drawing files for information and reference only. All intentional or unintentional revisions, additions, or deletions to these CADD files shall be made at the full risk of that party making such revisions, additions or deletions and that party shall hold harmless and indemnify the Consultant from any & all responsibilities, claims, and liabilities.

SUBMITTAL/REVISIONS

04/20/18	CITY SUBMITTAL

PROFESSIONAL SIGNATURE

I hereby certify that this plan, specification, or report was prepared by me or under my direct supervision and that I am a duly Licensed Professional Engineer under the laws of the State of Minnesota.

PRELIMINARY

Licensed Professional Engineer	Tim Woolsoulouth - PE
Date	
License Number	20383

QUALITY CONTROL

Loucks Project No.	16101A
Project Lead	TWM
Drawn By	ZHW
Checked By	TWM
Review Date	04/02/18

SHEET INDEX

C0-1 ..... COVER SHEET
C1-1 ..... EXISTING CONDITIONS
C1-2 ..... PRELIMINARY PLAT
C2-0 - C2-2 ..... SITE PLAN
C3-0 - C3-2 ..... GRADING PLAN
C3-3 - C3-5 ..... SWPPP PLAN & NOTES
C4-0 - C4-2 ..... UTILITY PLAN
C8-1 - C8-2 ..... DETAILS
L0-1 - L0-3 ..... TREE PRESERVATION
L0-4 ..... TREE INVENTORY
L1-1 - L1-2 ..... LANDSCAPE PLANS
L2-1 ..... LANDSCAPE DETAILS

NORTH LANDSCAPE PLAN

L1-1

Plotted: 04 /18 / 2018 10:13 AM W:\2016\16101A\CADD DATA\LANDSCAPE\ .dwg Sheet Files - 4-6 Addition\L16101A L1-1 Landscape Plan

TYPICAL LOT LANDSCAPE PLAN

LANDSCAPE LEGEND

- SIDE SLOPE TREES
- NATIVE SEED MIX - MNDOT MIX 33-261
- 36" SOD STRIP ALONG NEW CURBS OVER 4" DEPTH TOPSOIL

LANDSCAPE NOTES

1. POND SLOPE TREES WILL BE PLANTED AT TIME OF GRADING AND ROAD CONSTRUCTION. LOT TREES AND SHRUBS WILL BE PLANTED AT TIME OF BUILDING CONSTRUCTION

2. TREE RESTORATION WILL BE APPLIED AT TIME OF PHASED TREE REMOVAL BASED ON DEVELOPMENT SCHEDULE.

PLANTING REQUIREMENTS - SOUTH		TOTAL REQ'D	TOTAL PROPOSED
POND SLOPE TREES - 12 TREES PER 1 ACRE	0.53 ACRE	7	7
LOT TREES - 2 PER LOT	59 LOTS	118	118
LOT SHRUBS - 5 PER LOT	59 LOTS	295	295

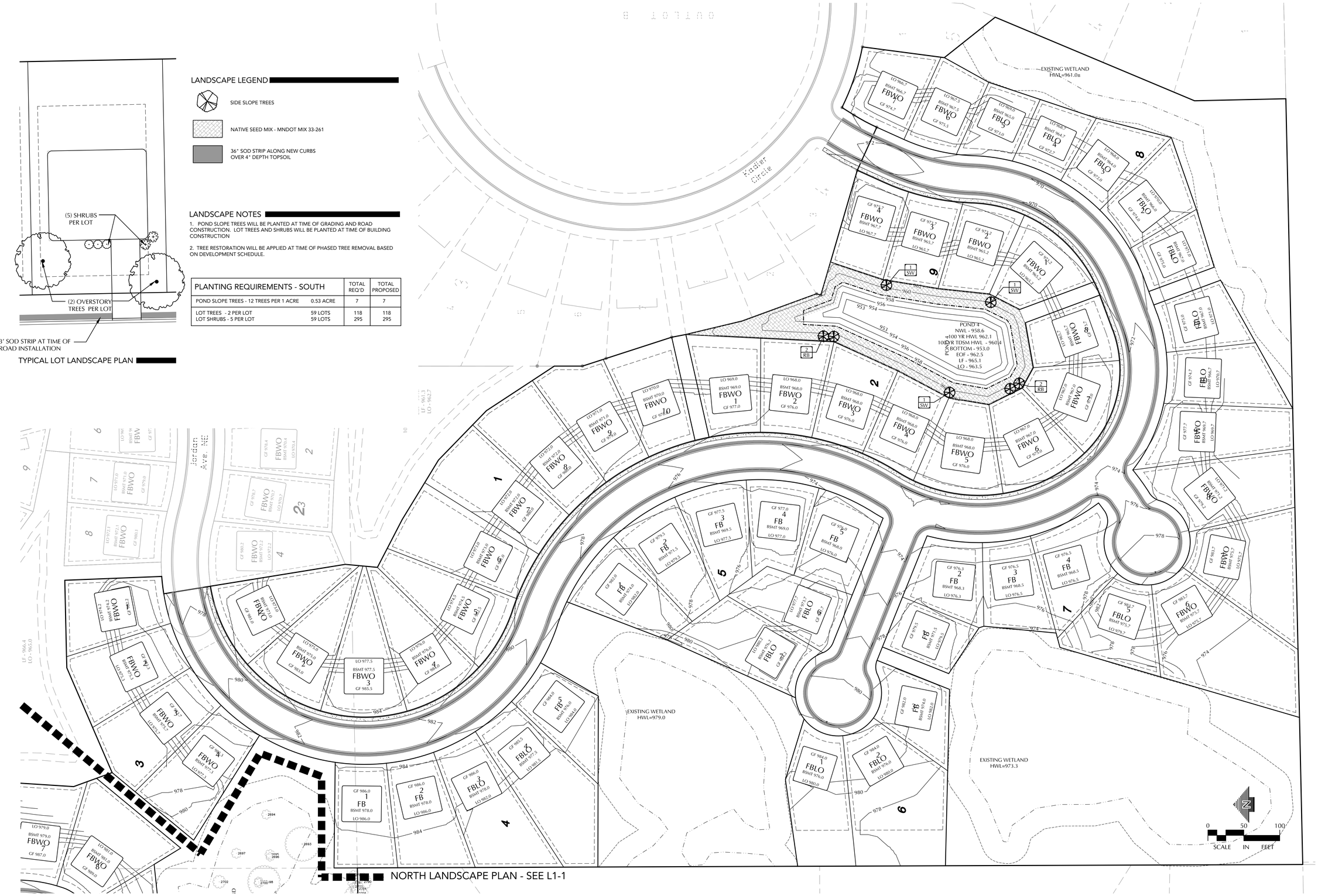

CALL BEFORE YOU DIG!
Gopher State One Call
TWIN CITY AREA: 651-454-0002
TOLL FREE: 1-800-252-1166

WARNING:

THE CONTRACTOR SHALL BE RESPONSIBLE FOR CALLING FOR LOCATIONS OF ALL EXISTING UTILITIES. THEY SHALL COOPERATE WITH ALL UTILITY COMPANIES IN MAINTAINING THEIR SERVICE AND / OR RELOCATION OF LINES.

THE CONTRACTOR SHALL CONTACT GOPHER STATE ONE CALL AT 651-454-0002 AT LEAST 48 HOURS IN ADVANCE FOR THE LOCATIONS OF ALL UNDERGROUND WIRES, CABLES, CONDUITS, PIPES, MANHOLES, VALVES OR OTHER BURIED STRUCTURES BEFORE DIGGING. THE CONTRACTOR SHALL REPAIR OR REPLACE THE ABOVE WHEN DAMAGED DURING CONSTRUCTION AT NO COST TO THE OWNER.

CROW RIVER HEIGHTS WEST FUTURE ADD.

HANOVER, MN

BACKES COMPANIES
11413 ASHBURY CIRCLE N.
CHAMPLIN, MN 55316
PHONE: (612) 369-7750
FAX (612) 566-1525

LOUCKS
PLANNING
CIVIL ENGINEERING
LAND SURVEYING
LANDSCAPE ARCHITECTURE
ENVIRONMENTAL
7200 Hemlock Lane, Suite 300
Maple Grove, MN 55369
763.424.5505
www.loucksinc.com

CADD QUALIFICATION

CADD files prepared by the Consultant for this project are instruments of the Consultant professional services for use solely with respect to this project. These CADD files shall not be used on other projects, for additions to this project, or for completion of this project by others without written approved by the Consultant. With the exception of such reliance by others as may be permitted by the terms of the CADD License, files for information and convenience only. All intentional or unintentional revisions, additions, or deletions to these CADD files shall be made at the full risk of that party making such revisions, additions or deletions and that party shall hold harmless and indemnify the Consultant from any & all responsibilities, claims, and liabilities.

SUBMITTAL/REVISIONS

04/20/18 CITY SUBMITTAL

PROFESSIONAL SIGNATURE

I hereby certify that this plan, specification, or report was prepared by me or under my direct supervision and that I am a duly Licensed Professional Engineer under the laws of the State of Minnesota.

PRELIMINARY

Licensed Name: Zachary H. Molnau - PE
Date: License No. 20383

QUALITY CONTROL

Loucks Project No.	16101A
Project Lead	TWM
Drawn By	ZHW
Checked By	TWM
Review Date	04/02/18

SHEET INDEX

C0-1	COVER SHEET
C1-1	EXISTING CONDITIONS
C1-2	PRELIMINARY PLAT
C2-0 - C2-2	SITE PLAN
C3-0 - C3-2	GRADING PLAN
C3-3 - C3-5	SWPPP PLAN & NOTES
C4-0 - C4-2	UTILITY PLAN
C8-1 - C8-2	DETAILS
L0-1 - L0-3	TREE PRESERVATION
L0-4	TREE INVENTORY
L1-1 - L1-2	LANDSCAPE PLANS
L2-1	LANDSCAPE DETAILS

SOUTH LANDSCAPE PLAN

L1-2

Plotted: 04 /18 / 2018 10:11 AM W:\2016\16101A\CADD DATA\LANDSCAPE_dwg Sheet Files - 4-A Addition\L16101A L1-1 Landscape Plan

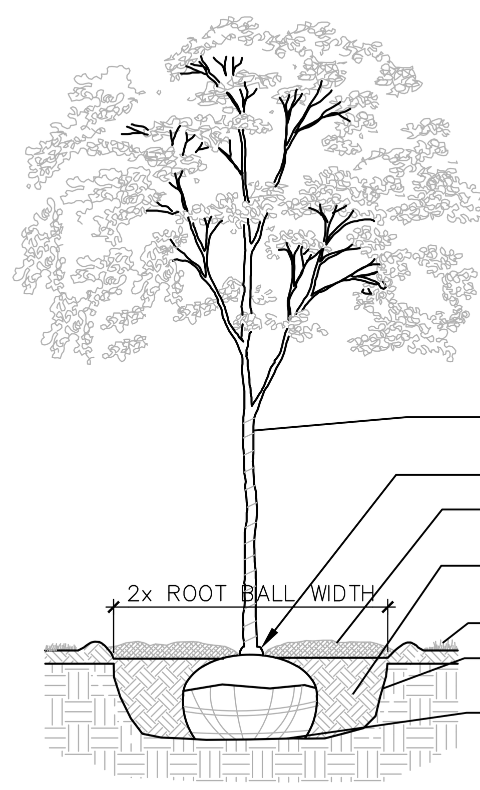

THE CONTRACTOR IS RESPONSIBLE FOR MAINTAINING ALL TREES IN A PLUMB POSITION THROUGH THE WARRANTY PERIOD. STAKING IS SUGGESTED, BUT NOT REQUIRED. ANY STAKING MUST CONFORM WITH PRACTICES AS DEFINED IN A.N.A. GUIDELINES FOR STANDARD PRACTICES

PRUNE DAMAGED AND CROSSING BRANCHES AFTER PLANTING IS COMPLETE.

CUT BACK WIRE BASKET

WATER TREE THOROUGHLY DURING PLANTING OPERATIONS. PLACE BACKFILL IN 8-12" LIFTS AND SATURATE SOIL WITH WATER. DO NOT COMPACT MORE THAN NECESSARY TO MAINTAIN PLUMB.

TREE WRAP TO FIRST BRANCH

ROOT FLARE EVEN WITH OR JUST ABOVE GRADE.

MULCH - 4" DEEP. NO MULCH IN CONTACT WITH TRUNK - SEE NOTES OR SPECS.

BACKFILL WITH IN SITU TOPSOIL

EDGE VARIES - SEE PLAN

SCARIFY BOTTOM AND SIDES OF HOLE PRIOR TO PLANTING

SET PLANT ON UNDISTURBED NATIVE SOIL

CONTRACTOR IS RESPONSIBLE FOR TESTING PERCOLATION RATES PRIOR TO PLANTING. NOTIFY LANDSCAPE ARCHITECT IMMEDIATELY IF POOR DRAINAGE EXISTS.

1 / L2-1

DECIDUOUS TREE PLANTING DETAIL

SCALE: 1/2" = 1'-0"

Deciduous Tree.DWG

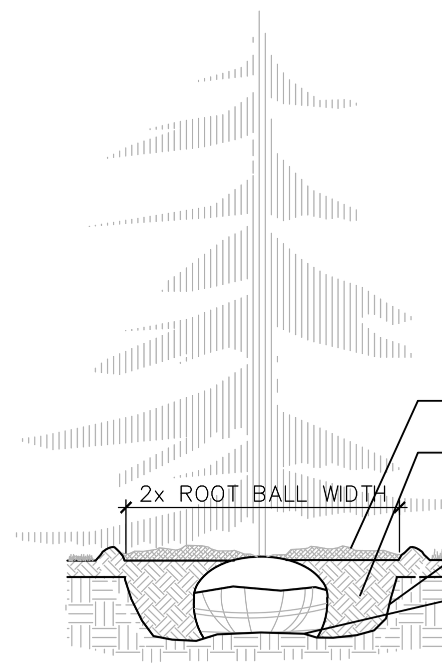

THE CONTRACTOR IS RESPONSIBLE FOR MAINTAINING ALL TREES IN A PLUMB POSITION THROUGH THE WARRANTY PERIOD. STAKING IS SUGGESTED, BUT NOT REQUIRED. ANY STAKING MUST CONFORM WITH PRACTICES AS DEFINED IN A.N.A. GUIDELINES FOR STANDARD PRACTICES.

PRUNE ANY DAMAGED BRANCHES AFTER PLANTING IS COMPLETE.

WATER TREE THOROUGHLY DURING PLANTING OPERATIONS. PLACE BACKFILL IN 8-12" LIFTS AND SATURATE SOIL WITH WATER. DO NOT COMPACT MORE THAN NECESSARY TO MAINTAIN PLUMB.

MULCH - 4" DEEP - SEE NOTES OR SPECS. MULCH MUST NOT BE IN CONTACT WITH TRUNK.

BACKFILL WITH IN SITU TOPSOIL

EDGE VARIES - SEE PLAN

SCARIFY BOTTOM AND SIDES OF HOLE PRIOR TO PLANTING

ROOT BALL SET ON UNDISTURBED SUBGRADE

CONTRACTOR IS RESPONSIBLE FOR TESTING PERCOLATION RATES PRIOR TO PLANTING. NOTIFY LANDSCAPE ARCHITECT IMMEDIATELY IF POOR DRAINAGE EXISTS.

2 / L2-1

CONIFEROUS TREE PLANTING DETAIL

SCALE: 1/2" = 1'-0"

Coniferous Tree.DWG

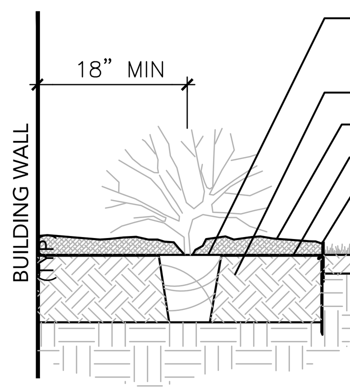

SHRUBS TO BE PLACED SO THAT TOP OF CONTAINER SITS FLUSH WITH PROPOSED GRADE.

PLANTING SOIL - SEE NOTES OR SPEC.

MULCH - 3" DEPTH - SEE NOTES OR SPEC.

LANDSCAPE FABRIC - SEE NOTES OR SPEC.

EDGING MATERIAL - SEE NOTES OR SPEC.

EDGE VARIES - REFER TO PLAN

LOOSEN ROOTS OF ALL CONTAINERIZED PLANTS. SCARIFY BOTTOM AND SIDES OF HOLE PRIOR TO PLANTING

3 / L2-1

SHRUB PLANTING DETAIL

SCALE: 3/4" = 1'-0"

PLANT LIST

KEY	QTY	COMMON NAME	SCIENTIFIC NAME	SIZE	COMMENTS
		SIDE SLOPE TREES - 29 TOTAL			
RB	20	RIVER BIRCH	Betula nigra	2-1/2" CAL B.B.	H 40-50' W 30-40'
SW	14	SWAMP WHITE OAK	Quercus bicolor	2-1/2" CAL B.B.	H 50-60' W 40-50'

LOT PLANT MATERIAL NOTES:

IN ORDER TO ENCOURAGE SPECIES VARIETY AND TO PERMIT HOMEOWNERS TO SELECT THEIR OWN LANDSCAPING, THE CITY WILL NOT REQUIRE THE HOMEOWNERS TO SELECT PLANTS FROM A SPECIFIC PLANT LIST. THE FOLLOWING LIST IS A SUGGESTION OF THE TYPES OF PLANT MATERIAL THAT MAY BE SELECTED BY THE HOMEOWNER.

THE CITY REQUIRES THAT EACH LOT HAVE TWO TREES AND FIVE SHRUBS IN THE FRONT YARD AND THAT THE ENTIRE LOT BE SODDED.

		LOT TREES			
		IMPERIAL HONEYLOCUST	Gleditsia triacanthos inermis 'Impcole'	2-1/2" CAL B.B.	H 30-35' W 30-35'
		RED SUNSET MAPLE	Malus 'Prairie Rose'	2-1/2" CAL B.B.	H 45' W 35'
		NORTHERN PIN OAK	Quercus ellipsoidalis	2-1/2" CAL B.B.	H 40-50' W 30-35'
		GREENSPIRE LINDEN	Tilia cordata 'Greenspire'	2-1/2" CAL B.B.	H 40-50' W 30-35'
		AUSTRIAN PINE	Pinus nigra	8' B.B.	H 50-60' W 30-35'
		COLORADO BLUE SPRUCE	Picea pungens	8' B.B.	H 40-60' W 15-30'
		BLACK HILLS SPRUCE	Picea glauca densata	8' B.B.	H 30-40' W 20-30'
		CONIFEROUS SHRUBS			
		SEA GREEN JUNIPER	Juniperus chinensis 'Sea Green'	#5 CONT	H 4-6' W 3-5'
		SCANDIA JUNIPER	Juniperus sabina 'Scandia'	#5 CONT	H 18" W 3-5'
		TAUNTON YEW	Taunton x media 'Taunton'	#5 CONT	H 3' W 3-4'
		PRINCE OF WALES JUNIPER	Juniperus horizontalis 'Prince of Wales'	#5 CONT	H 6" W 5-6'
		DECIDUOUS SHRUBS			
		NEON FLASH SPIREA	Spirea japonica 'Neon Flash'	#5 CONT	H 3' W 3-5'
		TOR SPIREA	Spirea betulifolia 'Tor'	#5 CONT	H 3' W 3'
		LITTLE PRINCESS SPIREA	Spirea japonica 'Little Princess'	#5 CONT	H 2-3' W 3'
		DWARF EUROPEAN VIBURNUM	Viburnum opulus 'Nanum'	#5 CONT	H 24" W 2-3'
		AUTUMN MAGIC CHOKEBERRY	Aronia melanocarpa 'Autumn Magic'	#5 CONT	H 5-7' W 2-4'
		RED GNOME DOGWOOD	Cornus alba siberica 'Red Gnome'	#5 CONT	H 3-4' W 4-5'
		DWARF BUSH HONEYSUCKLE	Diervilla lonicera	#5 CONT	H 3-4' W 3'
		ALPINE CURRANT	Ribes alphinum	#5 CONT	H 3-5' W 5-6'

GENERAL NOTES

CONTRACTOR SHALL VISIT SITE PRIOR TO SUBMITTING BID. HE SHALL INSPECT SITE AND BECOME FAMILIAR WITH EXISTING CONDITIONS RELATING TO THE NATURE AND SCOPE OF WORK.

VERIFY LAYOUT AND ANY DIMENSIONS SHOWN AND BRING TO THE ATTENTION OF THE LANDSCAPE ARCHITECT ANY DISCREPANCIES WHICH MAY COMPROMISE THE DESIGN AND/OR INTENT OF THE PROJECT'S LAYOUT.

ASSURE COMPLIANCE WITH ALL APPLICABLE CODES AND REGULATIONS GOVERNING THE WORK OR MATERIALS SUPPLIED.

CONTRACTOR SHALL PROTECT ALL EXISTING ROADS, CURBS/GUTTERS, TRAILS, TREES, LAWNS AND SITE ELEMENTS DURING PLANTING OPERATIONS. ANY DAMAGE TO SAME SHALL BE REPAIRED AT NO COST TO THE OWNER.

CONTRACTOR SHALL VERIFY ALIGNMENT AND LOCATION OF ALL UNDERGROUND AND ABOVE GRADE UTILITIES AND PROVIDE THE NECESSARY PROTECTION FOR SAME BEFORE CONSTRUCTION / MATERIAL INSTALLATION BEGINS (MINIMUM 10' - 0" CLEARANCE).

ALL UNDERGROUND UTILITIES SHALL BE LAID SO THAT TRENCHES DO NOT CUT THROUGH ROOT SYSTEMS OF ANY EXISTING TREES TO REMAIN.

EXISTING CONTOURS, TRAILS, VEGETATION, CURB/GUTTER AND OTHER EXISTING ELEMENTS BASED UPON INFORMATION SUPPLIED TO LANDSCAPE ARCHITECT BY OTHERS. CONTRACTOR SHALL VERIFY ANY AND ALL DISCREPANCIES PRIOR TO CONSTRUCTION AND NOTIFY LANDSCAPE ARCHITECT OF SAME.

THE ALIGNMENT AND GRADES OF THE PROPOSED WALKS, TRAILS AND/OR ROADWAYS ARE SUBJECT TO FIELD ADJUSTMENT REQUIRED TO CONFORM TO LOCALIZED TOPOGRAPHIC CONDITIONS AND TO MINIMIZE TREE REMOVAL AND GRADING. ANY CHANGE IN ALIGNMENT MUST BE APPROVED BY LANDSCAPE ARCHITECT.

LANDSCAPE INSTALLATION

COORDINATE THE PHASES OF CONSTRUCTION AND PLANTING INSTALLATION WITH OTHER CONTRACTORS WORKING ON SITE.

NATIVE SEED MIX SHALL BE INSTALLED PER MNDOT SPECS AT 35 LBS/ACRE. ALL SEEDED AREAS SHALL BE COVERED WITH MNDOT TYPE 1 MULCH IMMEDIATELY AFTER SEEDING.

WHERE SOD ABUTS HARD SURFACES, FINISHED GRADE OF SOD SHALL BE HELD 1" BELOW SURFACE ELEVATION OF HARD SURFACE.

SOD A 3' WIDE STRIP ALONG ALL NEW CURBS. SOD SHALL BE PLACED OVER 4" OF TOPSOIL AND SHALL HAVE STAGGERED JOINTS.

NO PLANTING WILL BE INSTALLED UNTIL COMPLETE GRADING AND CONSTRUCTION HAS BEEN COMPLETED IN THE IMMEDIATE AREA.

ALL PLANT MATERIAL SHALL COMPLY WITH THE LATEST EDITION OF THE AMERICAN STANDARD FOR NURSERY STOCK, AMERICAN ASSOCIATION OF NURSERYMEN. UNLESS NOTED OTHERWISE, ALL SHRUBS SHALL HAVE AT LEAST 5 CANES AT THE SPECIFIED MINIMUM SHRUB HEIGHT OR WIDTH. BOULEVARD AND OVERSTORY TREES SHALL BEGIN BRANCHING NO LOWER THAN 5' ABOVE FINISHED GRADE.

PLAN TAKES PRECEDENCE OVER PLANT SCHEDULE IF DISCREPANCIES IN QUANTITIES EXIST. SPECIFICATIONS TAKE PRECEDENCE OVER NOTES.

NO PLANT MATERIAL SUBSTITUTIONS WILL BE ACCEPTED UNLESS APPROVAL IS REQUESTED OF THE LANDSCAPE ARCHITECT BY THE LANDSCAPE CONTRACTOR PRIOR TO THE SUBMISSION OF A BID AND/OR QUOTATION.

ALL PROPOSED PLANTS SHALL BE LOCATED AND STAKED AS SHOWN ON PLAN. ADJUSTMENTS IN LOCATION OF PROPOSED PLANT MATERIALS MAY BE NEEDED IN FIELD. SHOULD AN ADJUSTMENT BE ADVISED, THE LANDSCAPE ARCHITECT MUST BE NOTIFIED.

ALL PLANT MATERIALS SHALL BE FERTILIZED UPON INSTALLATION WITH A 27-3-3 SLOW RELEASE FERTILIZER MIXED IN WITH THE PLANTING SOIL PER THE MANUFACTURER'S INSTRUCTIONS. PLANTS MAY BE TREATED FOR SUMMER AND FALL INSTALLATION WITH AN APPLICATION OF GRANULAR 27-3-3 AT 6 OZ PER 2.5" CALIPER PER TREE AND 3 OZ PER SHRUB WITH AN ADDITIONAL APPLICATION OF 27-3-3 THE FOLLOWING SPRING IN THE TREE SAUCER.

ALL PLANTS TO BE INSTALLED AS PER PLANTING DETAILS. REMOVE ALL FLAGGING AND LABELS FROM PLANTS.

WRAPPING MATERIAL SHALL BE CORRUGATED PVC PIPING 1" GREATER IN CALIPER THAN THE TREE BEING PROTECTED OR QUALITY, HEAVY, WATERPROOF CREPE PAPER MANUFACTURED FOR THIS PURPOSE. WRAP ALL DECIDUOUS TREES PLANTED IN THE FALL PRIOR TO 12-1 AND REMOVE ALL WRAPPING AFTER 5-1.

ALL SHRUB BED MASSINGS NOT SHOWN TO RECEIVE ROCK MULCH SHALL RECEIVE 3" DEEP SHREDDED HARDWOOD MULCH AND FIBER MAT WEED BARRIER.

ALL TREES TO RECEIVE 4" DEEP SHREDDED HARDWOOD MULCH WITH NO MULCH IN DIRECT CONTACT WITH TREE TRUNK.

SPREAD GRANULAR PRE EMERGENT HERBICIDE (PREEN OR EQUAL) PER MANUFACTURER'S RECOMMENDATIONS UNDER ALL MULCHED AREAS.

IF THE LANDSCAPE CONTRACTOR IS CONCERNED OR PERCEIVES ANY DEFICIENCIES IN THE PLANT SELECTIONS, SOIL CONDITIONS OR ANY OTHER SITE CONDITION WHICH MIGHT NEGATIVELY AFFECT PLANT ESTABLISHMENT, SURVIVAL OR GUARANTEE, HE MUST BRING THESE DEFICIENCIES TO THE ATTENTION OF THE LANDSCAPE ARCHITECT PRIOR TO PROCUREMENT AND/OR INSTALLATION.

CONTRACTOR SHALL SUBMIT A WRITTEN REQUEST FOR THE OWNER ACCEPTANCE INSPECTION OF ALL LANDSCAPE AND SITE IMPROVEMENTS.

CONTRACTOR IS RESPONSIBLE FOR ON-GOING MAINTENANCE OF ALL NEWLY INSTALLED MATERIALS UNTIL TIME OF OWNER ACCEPTANCE. ANY ACTS OF VANDALISM OR DAMAGE WHICH MAY OCCUR PRIOR TO OWNER ACCEPTANCE SHALL BE THE RESPONSIBILITY OF THE CONTRACTOR. CONTRACTOR SHALL PROVIDE THE OWNER WITH A MAINTENANCE PROGRAM INCLUDING, BUT NOT NECESSARILY LIMITED TO, PRUNING, FERTILIZATION AND DISEASE/PEST CONTROL.

CONTRACTOR SHALL GUARANTEE NEW PLANT MATERIAL THROUGH ONE CALENDAR YEAR FROM THE DATE OF OWNER ACCEPTANCE.

WARRANTY (ONE FULL GROWING SEASON) FOR LANDSCAPE MATERIALS SHALL BEGIN ON THE DATE OF ACCEPTANCE BY THE LANDSCAPE ARCHITECT AFTER THE COMPLETION OF PLANTING OF ALL LANDSCAPE MATERIALS. NO PARTIAL ACCEPTANCE WILL BE CONSIDERED.

UNLESS NOTED OTHERWISE THE APPROPRIATE DATES FOR SPRING PLANT MATERIAL INSTALLATION AND SEED/SOD PLACEMENT IS FROM THE TIME GROUND HAS THAWED TO JUNE 15.

FALL SODDING IS GENERALLY ACCEPTABLE FROM AUGUST 15 - NOVEMBER 1. FALL DECIDUOUS PLANTING FROM THE FIRST FROST UNTIL NOVEMBER 15. PLANTING OUTSIDE THESE DATES IS NOT RECOMMENDED. ANY ADJUSTMENT MUST BE APPROVED IN WRITING BY THE LANDSCAPE ARCHITECT.

LANDSCAPE CONTRACTOR SHALL ESTABLISH TO HIS SATISFACTION THAT SOIL AND COMPACTION CONDITIONS ARE ADEQUATE TO ALLOW FOR PROPER DRAINAGE AT AND AROUND THE BUILDING SITE.

CROW RIVER HEIGHTS WEST FUTURE ADD.

HANOVER, MN

BACKES COMPANIES
11413 ASHBURY CIRCLE N.
CHAMPLIN, MN 55316
PHONE: (612) 369-7750
FAX (612) 566-1525

LOUCKS
PLANNING
CIVIL ENGINEERING
LAND SURVEYING
LANDSCAPE ARCHITECTURE
ENVIRONMENTAL
7200 Hemlock Lane, Suite 300
Maple Grove, MN 55369
763.424.5505
www.loucksinc.com

CADD QUALIFICATION

CADD files prepared by the Consultant for this project are instruments of the Consultant professional services for use solely with respect to this project. These CADD files shall not be used on other projects, for additions to this project, or for completion of this project by others without written approval by the Consultant. With the Consultant's approval, others may be permitted to obtain copies of the CADD drawing files for information and reference only. All intentional or unintentional revisions, additions, or deletions to these CADD files shall be made at the full risk of that party making such revisions, additions or deletions and that party shall hold harmless and indemnify the Consultant from any & all responsibilities, claims, and liabilities.

SUBMITTAL/REVISIONS

04/20/18 CITY SUBMITTAL

PROFESSIONAL SIGNATURE

I hereby certify that this plan, specification or report was prepared by me or under my direct supervision and that I am a duly Licensed Professional Engineer under the laws of the State of Minnesota.

PRELIMINARY

... McLouth - PE

License No. 20383

Date

QUALITY CONTROL

Loucks Project No.	16101A
Project Lead	TWM
Drawn By	ZHW
Checked By	TWM
Review Date	04/02/18

SHEET INDEX

C0-1 COVER SHEET
C1-1 EXISTING CONDITIONS
C1-2 PRELIMINARY PLAT
C2-0 - C2-2 SITE PLAN
C3-0 - C3-2 GRADING PLAN
C3-3 - C3-5 SWPPP PLAN & NOTES
C4-0 - C4-2 UTILITY PLAN
C8-1 - C8-2 DETAILS
L0-1 - L0-3 TREE PRESERVATION
L0-4 TREE INVENTORY
L1-1 - L1-2 LANDSCAPE PLANS
L2-1 LANDSCAPE DETAILS

LANDSCAPE DETAILS

L2-1

Plotted: 04 /18 / 2018 10:12 AM W:\2016\16101A\CADD DATA\LANDSCAPE_dwg Sheet Files - 4-6 Addition\L16101A L1-1 Landscape Plan

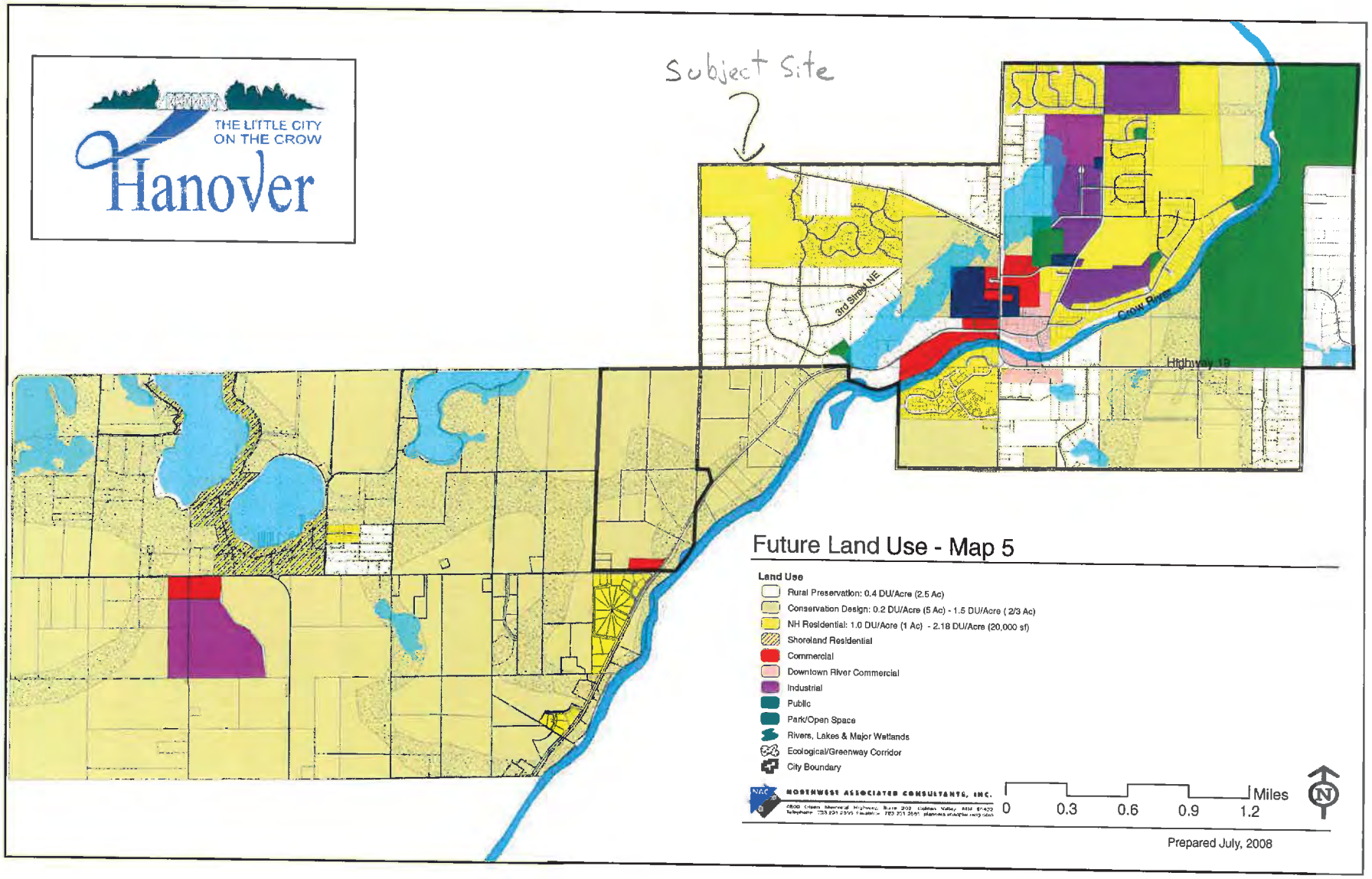

ATTACHMENT 4

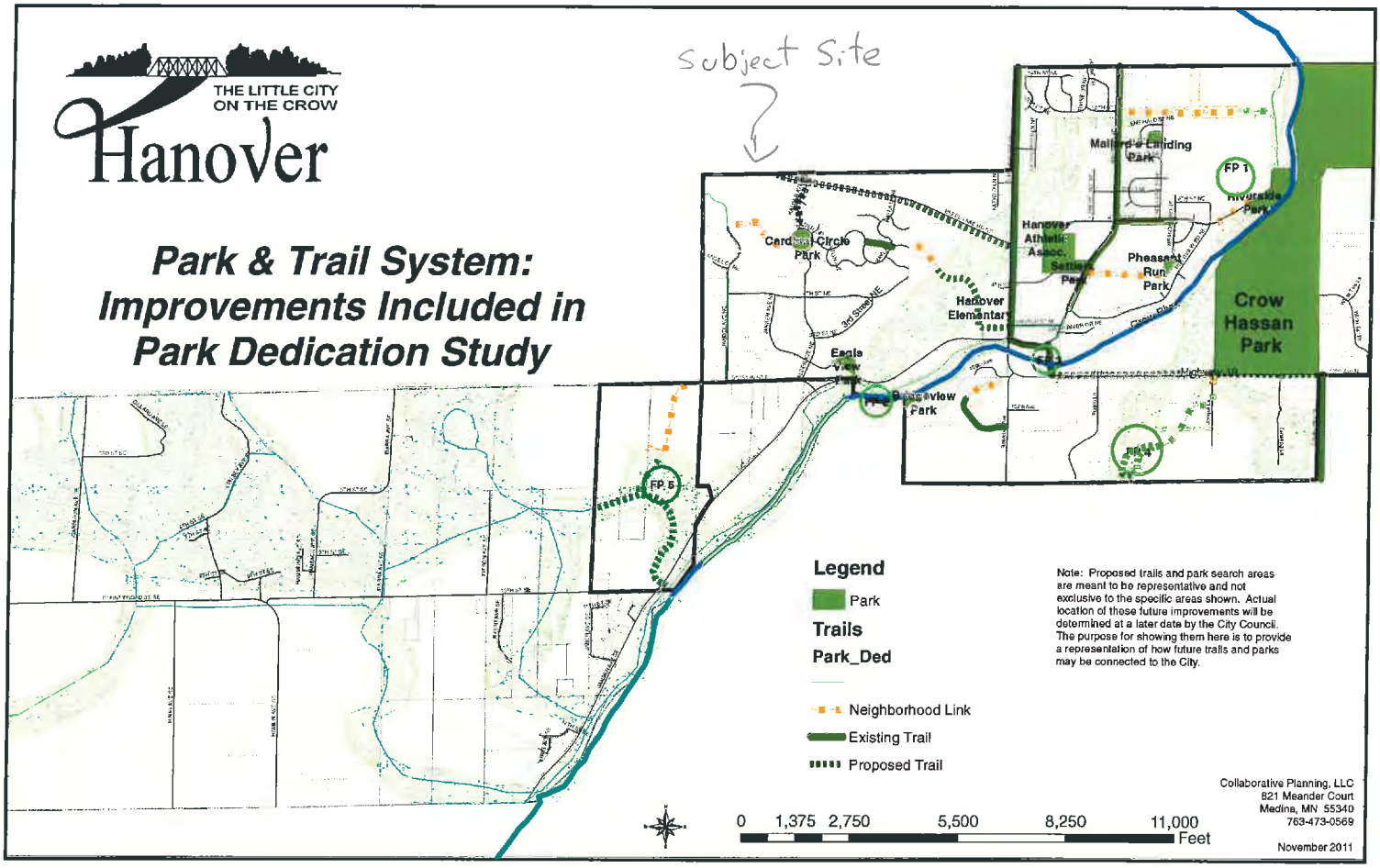
THE LITTLE CITY ON THE CROW
Hanover
Park & Trail System: Improvements Included in Park Dedication Study
Subject Site
Mallard Landing Park
FP 1
Riverside Park
Hanover Athletic Assoc. Sattler Park
Pheasant Run Park
Crow Hassan Park
Cardinal Circle Park
Hanover Elementary
3rd Street NE
Eagle View Park
Bluffview Park
FP 5
Legend
Park
Trails
Park_Ded
Neighborhood Link
Existing Trail
Proposed Trail
Note: Proposed trails and park search areas are meant to be representative and not exclusive to the specific areas shown. Actual location of these future improvements will be determined at a later date by the City Council. The purpose for showing them here is to provide a representation of how future trails and parks may be connected to the City.
0 1,375 2,750 5,500 8,250 11,000 Feet
Collaborative Planning, LLC
821 Meander Court
Medina, MN 55340
763-473-0569
November 2011

GEOTECHNICAL EXPLORATION
CROW RIVER HEIGHTS HOUSING DEVELOPMENT
HANOVER, MINNESOTA
GME PROJECT NO. 8416

Copyright, 1999 - GME Consultants, Inc.

GME CONSULTANTS, INC.
CONSULTING ENGINEERS
14000 21st Ave. No. / Minneapolis, MN 55447
Phone (612) 559-1859 / Fax (612) 559-0720

August 23, 1999

Mr. Tony Emmerich
Semler Construction, Inc.
10738 Hanson Boulevard
Coon Rapids, Minnesota 55433

GME Project No. 8416

RE: Geotechnical exploration for the proposed Crow River Heights Housing Development Subdivision on the Mills property at Beebe Lake Road Northeast (CSAH 34) near Kadler Avenue Northeast in Hanover, Minnesota

Dear Mr. Emmerich:

Following your acceptance of our proposal of May 20, 1999, we have completed our geotechnical exploration. Enclosed please find the results of our field exploration and our report. This report is the work product defined in our proposal.

We have enjoyed working with you on this phase of the development. If you have questions regarding this report or if we can be of further assistance, please contact us.

Sincerely,

GME CONSULTANTS, INC.

Tammy A. Landers, P.E.
Project Engineer

cc: Mr. Larry Olson, P.E.
LSJ Engineering, Inc.

TAL:smc
W:\TAL\8416 DTR.smc

WILLIAM C. KWASNY, P.E.
GREGORY R. REUTER, P.E.
MARK D. MILLSOP, P.G.

THOMAS P. VENEMA, P.E.
CHARLES M. ALLGOOD, P.E.
TIMOTHY F. McGLENNEN

WILLIAM E. BLOEMENDAL, P.E.
MERVYN MINDESS, P.E.
STEVEN J. RUESINK, P.E.

An Equal Opportunity Employer

TABLE OF CONTENTS

GEOTECHNICAL EXPLORATION
CROW RIVER HEIGHTS HOUSING DEVELOPMENT
HANOVER, MINNESOTA
GME PROJECT NO. 8416

SECTION	PAGE
ASFE Notes Regarding Geotechnical Engineering Reports	
INTRODUCTION	1
SCOPE OF WORK	1
FIELD EXPLORATION	2
LABORATORY TESTING	3
SITE CONDITIONS	5
Topography/Surface Features	5
Soil Conditions	5
Groundwater	7
REVIEW AND RECOMMENDATIONS	8
Discussion	8
Site Preparation	9
Foundation Recommendations	11
Basement Wall Backfill and Design	13
Floor Slabs	15
Underground Utilities	16
Pavement Subgrade	16
CONSTRUCTION CONSIDERATIONS	18
Groundwater	18
Equipment Selection/Soil Disturbance	19
Winter Construction	19
Construction Safety	20
Construction Testing	20
GENERAL QUALIFICATIONS	21
STANDARD OF CARE	22
Appendix	

GME CONSULTANTS, INC.

IMPORTANT INFORMATION ABOUT YOUR GEOTECHNICAL ENGINEERING REPORT

As the client of a consulting geotechnical engineer, you should know that site subsurface conditions cause more construction problems than any other factor. ASFE/The Association of Engineering Firms Practicing in the Geosciences offers the following suggestions and observations to help you manage your risks.

A Geotechnical Engineering Report Is Based On A Unique Set Of Project-Specific Factors
Your geotechnical engineering report is based on a subsurface exploration plan designed to consider a unique set of project-specific factors. These factors typically include: the general nature of the structure involved, its size, and configuration; the location of the structure on the site; other improvements, such as access roads, parking lots, and underground utilities; and the additional risk created by scope-of-service limitations imposed by the client. To help avoid costly problems, ask your geotechnical engineer to evaluate how factors that change subsequent to the date of the report may affect the report's recommendations.

Unless your geotechnical engineer indicates otherwise, do not use your geotechnical engineering report:

- when the nature of the proposed structure is changed, for example, if an office building will be erected instead of a parking garage, or a refrigerated warehouse will be built instead of an unrefrigerated one;
- when the size, elevation, or configuration of the proposed structure is altered;
- when the location or orientation of the proposed structure is modified;
- when there is a change of ownership; or
- for application to an adjacent site.

Geotechnical engineers cannot accept responsibility for problems that may occur if they are not consulted after factors considered in their report's development have changed.

Subsurface Conditions Can Change
A geotechnical engineering report based on conditions that existed at the time of subsurface exploration. Do not base construction decisions on a geotechnical engineering report whose adequacy may have been affected by time. Speak with your geotechnical consultant to learn if additional tests are advisable before construction starts. Note, too, that additional tests may be required when subsurface conditions are affected by construction operations at or adjacent to the site, or by natural events such as floods, earthquakes, or ground water fluctuations. Keep your geotechnical consultant apprised of any such events.

Most Geotechnical Findings Are Professional Judgments
Site exploration identifies actual subsurface conditions only at those points where samples are taken. The data were extrapolated by your geotechnical engineer who then applied judgment to render an opinion about overall subsurface conditions. The actual interface between materials may be far more gradual or abrupt than your report indicates. Actual conditions in areas not sampled may differ from those predicted in your report. While nothing can be done to prevent such situations, you and your geotechnical engineer can work together to help minimize their impact. Retaining your geotechnical engineer to observe construction can be particularly beneficial in this respect.

A Report's Recommendations Can Only Be Preliminary
The construction recommendations included in your geotechnical engineer's report are preliminary, because they must be based on the assumption that conditions revealed through selective exploratory sampling are indicative of actual conditions throughout a site. Because actual subsurface conditions can be discerned only during earthwork, you should retain your geotechnical engineer to observe actual conditions and to finalize recommendations. Only the geotechnical engineer who prepared the report is fully familiar with the background information needed to determine whether or not the report's recommendations are valid and whether or not the contractor is abiding by applicable recommendations. The geotechnical engineer who developed your report cannot assume responsibility or liability for the adequacy of the report's recommendations if another party is retained to observe construction.

Geotechnical Services Are Performed For Specific Purposes And Persons
Consulting geotechnical engineers prepare reports to meet the specific needs of specific individuals. A report prepared for a civil engineer may not be adequate for a construction contractor or even another civil engineer. Unless indicated otherwise, your geotechnical engineer prepared your report expressly for you and expressly for purposes you indicated. No other than you should apply this report for its intended purpose without first conferring with the geotechnical engineer. No party should apply this report for any purpose other than that originally contemplated without first conferring with the geotechnical engineer.

Geoenvironmental Concerns Are Not At Issue
Your geotechnical engineering report is not likely to relate any findings, conclusions, or recommendations about the potential for hazardous materials existing at the site. The equipment, techniques, and personnel used to perform a geoenvironmental exploration differ substantially from those applied in geotechnical engineering. Contamination can create major risks. If you have no information about the potential for your site being contaminated, you are advised to speak with your geotechnical consultant for information relating to geoenvironmental issues.

A Geotechnical Engineering Report Is Subject To Misinterpretation
Costly problems can occur when other design professionals develop their plans based on misinterpretations of a geotechnical engineering report. To help avoid misinterpretations, retain your geotechnical engineer to work with other project design professionals who are affected by the geotechnical report. Have your geotechnical engineer explain report implications to design professionals affected by them, and then review those design professionals' plans and specifications to see how they have incorporated geotechnical factors. Although certain other design professionals may be familiar with geotechnical concerns, none knows as much about them as a competent geotechnical engineer.

Boring Logs Should Not Be Separated From The Report
Geotechnical engineers develop final boring logs based upon their interpretation of the field logs (assembled by site personnel) and laboratory evaluation of field samples. Geotechnical engineers customarily include only final boring logs in their reports. Final boring logs should not under any circumstances be redrawn for inclusion in architectural or other design drawings, because drafters may commit errors or omissions in the transfer process. Although photographic reproduction eliminates this problem, it does nothing to minimize the possibility of contractors misinterpreting the logs during bid preparation. When this occurs, delays, disputes, and unanticipated costs are the all-too-frequent result.

To minimize the likelihood of boring log misinterpretation, give contractors ready access to the complete geotechnical engineering report prepared or authorized for their use. (If access is provided only to the report prepared for you, you should advise contractors of the report's limitations, assuming that a contractor was not one of the specific persons for whom the report was prepared and that developing construction cost estimates was not one of the specific purposes for which it was prepared. In other words, while a contractor may gain important knowledge from a report prepared for another party, the contractor would be well-advised to discuss the report with your geotechnical engineer and to perform the additional or alternative work that the contractor believes may be needed to obtain the data specifically appropriate for construction cost estimating purposes.) Some clients believe that it is unwise or unnecessary to give contractors access to their geotechnical engineering reports because they hold the mistaken impression that simply disclaiming responsibility for the accuracy of subsurface information always insulates them from attendant liability. Providing the best available information to contractors helps prevent costly construction problems. It also helps reduce the adversarial attitudes that can aggravate problems to disproportionate scale.

Read Responsibility Clauses Closely
Because geotechnical engineering is based extensively on judgment and opinion, it is far less exact than other design disciplines. This situation has resulted in wholly unwarranted claims being lodged against geotechnical engineers. To help prevent this problem, geotechnical engineers have developed a number of clauses for use in their contracts, reports, and other documents. Responsibility clauses are not exculpatory clauses designed to transfer geotechnical engineers' liabilities to other parties. Instead, they are definitive clauses that identify where geotechnical engineers' responsibilities begin and end. Their use helps all parties involved recognize their individual responsibilities and take appropriate action. Some of these definitive clauses are likely to appear in your geotechnical engineering report. Read them closely. Your geotechnical engineer will be pleased to give full and frank answers to any questions.

Rely On The Geotechnical Engineer For Additional Assistance
Most ASFE-member consulting geotechnical engineering firms are familiar with a variety of techniques and approaches that can be used to help reduce risks for all parties to a construction project, from design through construction. Speak with your geotechnical engineer not only about geotechnical issues, but others as well, to learn about approaches that may be of genuine benefit. You may also wish to obtain certain ASFE publications. Contact a member of ASFE for a complimentary directory of ASFE publications.

ASFE THE ASSOCIATION OF ENGINEERING FIRMS PRACTICING IN THE GEOSCIENCES

8811 COLESVILLE ROAD/SUITE G106/SILVER SPRING, MD 20910
TELEPHONE: (301) 565-2733 FACSIMILE: (301) 589-2017

INTRODUCTION

The Mills property covers about 209 acres. It will be subdivided into 519 lots for single family homes. The preliminary grading plan for the development indicates that the buildings will have full or walkout basements. Structures of the type proposed have masonry bearing walls to grade or first floor level, and wood frame construction above. These buildings typically have wall loads of about 1 to 2 kips per lineal foot, with maximum column loads under 50 kips. Homes with masonry chimneys may have heavier concentrated loads at these points.

Paved municipal streets will be constructed throughout the subdivision. The infrastructure will be located under the streets or within the street right-of ways.

The preliminary grading plan indicates that some cutting and filling will be required to prepare the site.

SCOPE OF WORK

The purposes of this report are to describe the soil and groundwater conditions encountered in our subsurface exploration; to review and evaluate these conditions with respect to the proposed project; and

to present recommendations for feasible methods of foundation and earthwork design and construction. The elements of our scope of work are described below.

- Drill and sample 20 Standard Penetration borings
- Install six piezometers for long-term groundwater monitoring
- Perform laboratory testing and visual/manual classification of the recovered soil samples
- Prepare the geotechnical report

FIELD EXPLORATION

We drilled 20 borings for this project, as shown on the enclosed Soil Boring Location Diagram. We recommended the number and depths of the borings; the borings were staked in the field by a survey crew from Midwest Land Surveyors, Inc. Midwest's survey crew also determined surface elevations of the borings referenced to National Geodetic Vertical Datum (NGVD). Before we drilled, we contacted Gopher State One Call to locate public underground utilities.

We drilled the borings with a BK 51HD rig mounted on a Bombardier tracked carrier. We drilled with hollow stem augers fitted with a removable center plug and sampled by the split barrel method (ASTM: D

1586). Our crew kept field logs noting the methods of drilling and sampling, along with Standard Penetration values, preliminary soil classifications, and observed groundwater levels. Representative portions of recovered soil samples were sealed in jars to reduce moisture loss, and returned to our laboratory for examination, testing and final classification by a Geotechnical Engineer.

We installed PVC piezometers in six of the borings. The locations of the piezometers are noted on the Soil Boring Location Diagram. We measured the groundwater depths at the time of installation and on July 26, 1999. The groundwater depths observed are shown on the boring logs along with the top of riser elevation.

We backfilled the boreholes with cuttings to comply with current Minnesota Department of Health regulations.

LABORATORY TESTING

The laboratory testing was initiated by a Geotechnical Engineer examining each of the recovered samples to determine the major and minor soil components, while also noting the color, degree of saturation, and lenses or seams found in the samples. The Engineer

directed that selected samples be tested for moisture content; the results of these tests are shown on the respective logs.

The Engineer visually/manually classified each sample based on texture and plasticity in accordance with the Unified Soil Classification System. The capital letter symbols in parentheses following the written soil descriptions on the boring logs are the estimated group symbols based on this system. A chart describing this classification system is included in the Appendix of this report. The Engineer grouped the soils by type into the strata as shown on the boring logs. The stratification line shown on the logs are approximate; *in situ*, the transition between soil types may be gradual or abrupt in the horizontal or vertical directions.

We will discard the soil samples from this program 30 days after the date of this report. If you wish to have the samples retained beyond this time, we ask that you please advise us.

SITE CONDITIONS

Topography/Surface Features

At the time of our field exploration, the site was undeveloped and wooded in some areas. The site is generally rolling and has several wetlands in low-lying, poorly drained areas.

The site has rolling hills and generally slopes from the west at about elevation 996 feet to the east where it ranges from 940 to 960 feet. The northern edge of the site drops in elevation to meet Beebe Lake Road Northeast at its closest proximity of the site sloping from 970 to 926 feet down toward the east.

Soil Conditions

The soil conditions found in the borings are shown on the logs in the Appendix. The conditions that we describe and discuss in this report are pertinent only at the boring locations and under the environment at the time of our field exploration. If different conditions are found during construction, it is necessary that you contact us so that our recommendations can be reviewed.

Based on the Minnesota Department of Natural Resources (DNR) Atlas for this area, the predominant soil types consist of Des Moines lobe clayey glacial drift underlain by Superior lobe clay till with buried sand and gravel deposits of variable thicknesses. Low-lying, poorly drained areas have accumulated surficial deposits of alluvial silt and organics.

Of our 20 borings drilled for this project, we encountered silt and clay organic topsoil in 18 of the borings, ranging in thickness from 0.5 to 2 feet. In borings 1 and 14, we encountered silty sand and sandy clay fill over the topsoil to depths of 2 and 3 feet, respectively. The fill was loose with N-values of 2 to 4, and laboratory moisture contents within the clay fill of 18%.

In boring 14, located in a low-lying area at the northeast corner of the site, we found peat and organic silt beneath the fill to a depth of 9 feet. These organic soils were very soft with an N-value of 2, and moisture contents of 80% to 159%. In our opinion, these soils are highly compressible and would settle substantially under the weight of new fill and buildings.

Beneath the organic silt in boring 14, and below the topsoil in our other borings, we encountered the predominant naturally-occurring sandy clay till with interbedded lenses of sand and gravel to the termination depths of our borings at 15 feet. The upper surface of the clay till was generally firm to stiff with N-values of 5 to 10, becoming stiff to very stiff with depth. The moisture contents generally ranged from 15% to 20%, with higher moistures encountered at the surface or near sand lenses.

Groundwater

We encountered groundwater while drilling in six of the 20 borings, at depths of 2 to 14 feet, corresponding to elevations of 926.6 to 976.7 feet. Piezometers were installed in six of the borings, 1, 4, 7, 10, 17, and 20. On July 26, 1999, we found groundwater in piezometers 7 and 10, at elevations 953.2 and 946.4 feet, respectively. The other piezometers were dry to elevations 931.6 to 970.6 feet. The highest water level measured was in piezometer 1 on June 29, 1999 at an elevation of 976.7 feet.

Lake Wilhelm is located directly north of County Road 34, north of the west half of the site, and has an average summer water elevation of 951 feet. There is a Crow River backwater wetland area

approximately 1/2 mile southeast of the site, which has an average summer water elevation of 895 feet. There appears to be a groundwater gradient to the east and southeast toward the Crow River.

It is our opinion that groundwater encountered at higher elevations while drilling, such as in boring 1, is perched. Perched groundwater develops when water infiltrating downward and moving laterally through the soil within sand lenses or layers is restricted from the flow vertically by less permeable soil such as clay and silt.

The hydrostatic and perched groundwater levels will vary in elevation seasonally and annually, depending on local amounts of precipitation, evaporation, surface runoff and infiltration.

ENGINEERING REVIEW AND RECOMMENDATIONS

Discussion

The engineering recommendations made in this report are based on our understanding of the project. The recommendations are valid solely for the project described herein. If any changes in the nature, location, floor elevation, or design of the buildings are made, the opinions and recommendations contained in this report shall not be

considered valid unless we review these changes and modify or verify them in writing.

After proper site preparation, to include removal of topsoil, existing fill, soft clay and organic soils, and placement of compacted fill to form the building pads, it is our opinion that the houses may be supported on conventional spread footing foundations.

Backfill in utility trenches should be properly moisture conditioned and compacted to form a suitable subgrade for the streets within the subdivision. Details of our recommendations for site preparation in building and pavement areas, and foundation recommendations are presented in the following report sections.

Site Preparation

The surficial topsoil, vegetation, and trees should be removed from the building pads. There should be sufficient lateral oversizing of the stripping to permit proper construction of the building pads.

The following table gives our recommended subcut depths to remove unsuitable soils.

ESTIMATED MINIMUM DEPTHS OF SUBCUT			
Boring No.	Surface Elevation (ft.)	Recommended Minimum Subcut Depth (ft.)	Approximate Elevation of Subcut (ft.)
B-1/P-1	984.6	3.5	981.1
B-2	988.7	0.7	988
B-3	973.9	2	971.9
B-4/P-4	963.9	0.7	963.2
B-5	962.7	1.5	961.2
B-6	979.5	0.7	978.8
B-7/P-7	961.5	2.0	959.5
B-8	963.4	0.5	963.0
B-9	951.8	1.5	950.3
B-10/P-10	954.8	0.6	954.2
B-11	961.9	0.6	961.3
B-12	962.1	0.5	961.5
B-13	963.7	2.0	961.7
B-14	928.6	11 to 13	917.5 to 915.5
B-15	964.7	0.5	964.2
B-16	959.1	- -	grade to subfloor
B-17/P-17	956.8	2	954.8
B-18	951.1	2	949.8
B-19	950.0	7	943
B-20/P-20	946.1	- -	grade to subfloor

The actual depths and lateral extent of unsuitable soils will vary between borings, may be deeper or shallower than found at the borings, and should be determined by a Geotechnical Engineer or Engineering Technician at the time of the construction. Subcut zones should also have adequate lateral oversizing so that new compacted fill is placed within the zone extending at an angle no less than 1 unit horizontal:1 unit vertical from the <u>bottom</u> of the footing elevation to the <u>bottom</u> of the excavation. Where organic soils are being subcut, such as in the area of boring 14, the oversizing should be extended to 1.5 horizontal to 1 vertical.

The excavated non-organic soils could be re-used as fill. These soils should be moisture conditioned to within 2% above or below their optimum moisture content, as determined by the Standard Proctor compaction test. The contractor should anticipate discing and drying before the clay could be used as fill.

We recommend that the total thickness of clay fill, including fill placed in subcut areas, be limited to 10 feet. The purpose for this limitation is that clay fill, even when well compacted at or near optimum moisture content, can settle due to hydro-compression. Areas requiring more than 10 feet of fill should have sand or silty sand within the lower portion of the fill.

The fill should be placed in loose lifts about 6 to 8 inches thick, and compacted to at least 98% of the maximum Standard Proctor dry density (ASTM: D 698).

Foundation Recommendations

After the site has been prepared as described, the buildings may be supported on conventional spread footing foundations. The exterior footings for heated portions of the buildings should bear at least 4 feet below final outside grade for protection from frost penetration.

The bottom of footings in basement areas should bear at least 16 inches below the top of the floor slab, provided that the footings are not subjected to freezing conditions during or after construction.

The bottom of footings for unheated attached garages, including the common wall between the garage and the main part of the house, as well as for footings supporting decks, overhangs, canopies, or screen walls, should be embedded at least 5 feet below final grade, because deeper frost penetration can occur away from the heated building. We also recommend that insulation, which can be a material such as 1/2 inch bead board, be applied to all sides of foundation walls for unheated garages, to prevent adfreezing of backfill soil.

At the recommended depths of embedment, we anticipate the foundations would bear on stiff clay or silt, or on compacted fill. We recommend that these foundations be proportioned for a maximum net allowable design bearing pressure of 2,000 pounds per square foot. This refers to the pressure that may be transmitted to the bearing stratum in excess of the pressure from the surrounding depth of overburden. The factor of safety with respect to the soil bearing capacity for this design would exceed 3.

We recommend that continuous footings have a minimum width of 20 inches, and isolated column footings have a minimum width of 30 inches, to avoid excessively narrow footings. For this design, we estimate that maximum building settlement should be on the order of 1 inch or less, with differential settlement about half this amount, provided that the bearing soils are not soft, wet, frozen or disturbed at the time of construction.

For the silty and clayey soils found on this site, it is very important that the foundation bearing soils not be permitted to freeze before or after construction of the footings and before the buildings are heated. The contractors should have appropriate insulating material on the site, such as insulation blankets or straw and plastic sheeting to protect foundation bearing soils from freezing. We strongly recommend that this provision be made a part of the specifications.

Basement Wall Backfill and Design

The lowest floor or basement elevations should be designed to provide adequate separation of slabs from observed water levels. We recommend a minimum of 3 feet vertical separation. However, for FHA or HUD housing, a 4 foot vertical separation is required. We have

reviewed the Preliminary Grading Plan provided dated July 26, 1999. Proposed lowest floor elevations in the area of B-1, B-7, B-13 and B-19, should be reviewed and adjusted accordingly. If the construction schedule permits, we recommend that the piezometers be left in place to observe for water levels during other times of the year.

We recommend that a perimeter drain system be installed around the outside of the basement walls, connected to sump pumps in the buildings from which water can be pumped out. The backfill above the drainpipes and extending laterally 18 inches from the walls should <u>not</u> be the excavated clay or silt. Rather, it should be free-draining granular soil having less than 7% passing the No. 200 sieve. Such soil was not found in our borings, and would have to be imported.

The backfill should be placed in loose lifts about 6 inches thick, and should be compacted with <u>manually-operated</u> vibratory plate compactors to at least 93% of the maximum Standard Proctor dry density. Large towed or self-propelled vibratory compactors should not be allowed within 4 feet of the new basement walls, because this equipment can damage the basement walls.

We recommend that a high quality dampproofing be applied to the basement walls. Dampproofing is intended to prevent the passage of water vapor through the walls, but not fluid water. Thus, it is important that a proper perimeter drain system be installed.

The upper 18 inches of backfill around each building should be a compacted low permeability soil such as the clay or silt encountered on the site, sloped to provide positive drainage away from the houses.

Floor Slabs

We recommend that a vapor barrier be installed under floor slabs of the buildings to reduce the potential for the upward migration of water vapor from the soil into and through the concrete slabs. Water vapor migrating upward through the slabs can damage floor coverings such as tile, carpeting, or wood and cause excessive humidity in the basements. The provisions for a vapor barrier should be included in the specifications for all of the home builders on this site.

Underground Utilities

Perched and hydrostatic water should be anticipated when installing utilities. The water levels observed in our borings and piezometers were highly variable due to the presence of water in sand lenses within the clay soils. Utilities and backfill should not be placed in standing water.

Fill may consist of on-site non-organic clay soils if moisture conditioned to within 2% above or below the optimum moisture content. Backfill should be placed in 6 to 8 inch loose lifts compacted to at least 95% of the Standard Proctor dry density. Within 3 feet of the pavement subgrade, compaction should be increased to 100%.

Pavement Subgrade

The topsoil and vegetation should be removed from the pavement areas. Fill needed to reach design grade may consist of clay that has been moisture conditioned to within 2% of the optimum moisture content. Most of the on-site soils are wetter than their optimum moisture content, and discing/drying should be expected. If this is not practical due to weather or schedule, then the on-site soils could be

blended with a drying agent such as Class C fly ash or hydrated lime, or dry fill could be imported.

Before placement of the aggregate base, we recommend that the subgrade be test rolled with a fully loaded tandem-axle truck. Soft of loose soils detected during the test roll should be scarified and recompacted, or replaced with new compacted fill.

Based on a clay and clayey silt subgrade, we recommend that the streets in the subdivision be designed using a Stabilometer value (R-value) of 10. We recommend placing a geofabric over the top of the subgrade prior to placement of the select granular base course, to reduce the potential for fouling (mixing) of the base with the underlying fine grained soils. Fouling of the base course reduces its effectiveness and contributes to premature pavement failure.

An alternative to the geofabric would be to include a 12 inch thick sand subbase layer between the base aggregate and the subgrade. The sand should meet the gradation requirements of Mn/DOT Section 3149.2.B2, C or G, modified to have less than 5% passing the No. 200 sieve. The sand would require adequate drainage by sloping and/or installation of finger drains tied into the storm system.

CONSTRUCTION CONSIDERATIONS

Groundwater

We encountered groundwater in several of our borings for this project. It is likely that excavations for basements or utilities on the site will encounter sand lenses, perched and/or hydrostatic groundwater. Provisions should be made for dewatering excavations before fill or concrete placement.

Water that enters excavations for buildings or utilities from groundwater seepage, surface runoff, or precipitation should be promptly pumped out. The contractors should not allow water to stand ponded over the foundation or subgrade soils, as this would soften or disturb them.

The contractors should not be permitted to place compacted fill or concrete into standing water or over softened soils in an attempt to displace these materials. This technique can trap the softened zones under the building causing excessive post-construction settlement even if the softened soil is only a few inches thick.

Equipment Selection/Soil Disturbance

The soil types at this site can be easily disturbed by construction equipment, especially when the soils are saturated or during freeze/thaw conditions. It is the earthwork contractor's responsibility to choose equipment and work procedures that will not unduly disturb the subgrade soils. The contractor should also route construction traffic away from foundation soils, subgrade, and areas of pavements and slabs, to avoid soil disturbance.

If the equipment the contractor selects causes rutting or pumping, it is his responsibility to switch to other types of equipment. The responsibility to properly select construction equipment to avoid disturbing soils on the site lies solely with the contractor. A note to this effect should be included in the project specifications.

Winter Construction

The soils encountered at the site are not conducive to winter construction and we recommend that this be avoided. Only unfrozen fill and backfill should be used. Placement of fill and/or foundation concrete must **not** be permitted on frozen soil, nor should

bearing soils under footings or slabs be allowed to freeze after concrete is placed, because excessive post-construction settlement could occur as the frozen soils thaw.

Construction Safety

All excavations must comply with the requirements of OSHA 29 CFR, Part 1926, Subpart P, "Excavations and Trenches." This document states that excavation safety is the sole responsibility of the contractor. Reference to this OSHA requirement should be included in the job specifications.

The responsibility to provide safe working conditions on the site, for earthwork, building construction, or any associated operations, is not borne in any manner by GME Consultants, Inc.

Construction Testing

We strongly recommend that the Owner retain the services of a geotechnical engineering firm at the time of earthwork construction, to provide experienced personnel to observe and test the base soils and the degree of compaction of fill.

Exposed soils in excavations should be tested by means of hand augering and with a Static Cone Penetrometer (SCP). The concrete used for the foundations and floor slabs should be tested, and reinforcing steel placement should be observed for compliance with the design, in accordance with the requirements of the 1997 Uniform Building Code, Chapter 17, Section 1701. We would be pleased to provide the necessary field observation, monitoring, and testing services.

A representative number of field density tests should be taken in controlled fill, to aid in judging its suitability. Proposed fill materials should be submitted to a laboratory for Standard Proctor compaction tests, and tests to check compliance with our recommendations and project specifications.

GENERAL QUALIFICATIONS

This report has been prepared based on the soil and groundwater conditions found in our borings and the available design data provided by LSJ Engineering, Inc. If there are any changes in size, scope, elevations, structural loads, use or nature of the buildings from those outlined in the Introduction of this report, or if our understanding of the project is incomplete or incorrect, it is

necessary that you contact us so we can review our recommendations to determine if they are applicable. Because of the preliminary nature of the grading plan provided as of the date of this report, we request that when the final grading plan is available, we be provided a copy for review with respect to our recommendations.

We determined the soil and groundwater conditions at 20 soil boring and six piezometer locations on the site. The conditions that we describe and discuss in this report are pertinent only at the boring locations and under the environment at the time of our field exploration. Variations in the subsurface conditions were encountered, and it is likely that additional variations exist that could not be determined from our site reconnaissance or from our borings. No warranty, express or implied, is presented in this report with respect to the soil and groundwater conditions on this site.

STANDARD OF CARE

The recommendations contained in this report represent our professional opinions. The soil testing and geotechnical engineering services performed for this project have been conducted in a manner consistent with that level of skill and care ordinarily

exercised by other members of the profession currently practicing in this area, under similar budgetary and time constraints. No other warranty, express or implied, is made.

Prepared by: Tammy A. Landers, P.E.
Project Engineer

Reviewed by: Charles M. Allgood, Jr., P.E.
Senior Project Engineer

TAL:smc
w:\TAL\8416 DTR.smc

I hereby certify that this plan, specification, or report was prepared by me or under my direct supervision and that I am a duly Registered Professional Engineer under the laws of the State of Minnesota

Tammy A. Landers

Date: 8/23/99 Reg. No. 26855

APPENDIX

SOIL BORING LOCATION DIAGRAM

GENERAL NOTES

SOIL BORING LOGS

UNIFIED SOIL CLASSIFICATION SYSTEM

SPECIAL NOTES REGARDING PLACEMENT OF COMPACTED FILL SOILS

8416.GCD

GME CONSULTANTS, INC.

Geotechnical • Materials • Environmental
14000 21st Avenue N.
Minneapolis, Minnesota 55447
(612) 559-1859

SOIL BORING LOCATION DIAGRAM

CROW RIVER HEIGHTS
HANOVER, MINNESOTA

VJL	CMA	JULY 99	GME Project No. 8416

GENERAL NOTES

DRILLING & SAMPLING SYMBOLS:

SL : SS with Liner
SS : Split Spoon — 1⅜" I.D., 2" O.D., unless otherwise noted
ST : Shelby Tube — 2" O.D., unless otherwise noted
PA : Power Auger
DB : Diamond Bit — NX: BX: AX
AS : Auger Sample
JS : Jar Sample
VS : Vane Shear
OS : Osterberg Sampler — 3" Shelby Tube
HS : Hollow Stem Auger
WS : Wash Sample
FT : Fish Trail
RB : Rock Bit
BS : Bulk Sample
PM : Pressuremeter test — in situ

Standard "N" Penetration: Blows per foot of a 140 pound hammer falling 30 inches on a 2 inch OD split spoon, except where noted.

WATER LEVEL MEASUREMENT SYMBOLS:

WL : Water Level
WCI : Wet Cave In
DCI : Dry Cave In
WS : While Sampling
WD : While Drilling
BCR : Before Casing Remvoal
ACR : After Casing Removal
AB : After Boring

Water levels indicated on the boring logs are the levels measured in the boring at the times indicated. In previous soils, the indicated elevations are considered reliable ground water levels. In impervious soils, the accurate determination of ground water elevations is not possible in even several days observation, and additional evidence of ground water elevations must be sought.

GRADATION DESCRIPTION & TERMINOLOGY

Coarse Grained or Granular Soils have more than 50% of their dry weight retained on a #200 sieve; they are described as: boulders, cobbles, gravel or sand. Fine Grained Soils have less than 50% of their dry weight retained on a #200 sieve; they are described as: clays or clayey silts if they are cohesive, and silts if they are non-cohesive. In addition to gradation, granular soils are defined on the basis of their relative in-place density and fine grained soils on the basis of their strength or consistency, and their plasticity.

Major Component Of Sample	Size Range	Descriptive Term(s) (Of Components Also Present in Sample)	Percent of Dry Weight
Boulders	Over 8 in. (200mm)	Trace	1 — 9
Cobbles	8 in. to 3 in. (200mm to 75mm)	Little	10 — 19
Gravel	3 in. to #4 sieve (75mm to 2mm)	Some	20 — 34
Sand	#4 to #200 sieve (2mm to .074mm)	And	35 — 50
Silt	Passing #200 sieve (0.074mm to 0.005mm)		
Clay	Smaller than 0.005mm		

CONSISTENCY OF COHESIVE SOILS:

Unconfined Comp. Strength, Qu, tsf	Consistency
< 0.25	Very Soft
0.25 — 0.49	Soft
0.50 — 0.99	Medium (Firm)
1.00 — 1.99	Stiff
2.00 — 3.99	Very Stiff
4.00 — 8.00	Hard
> 8.00	Very Hard

RELATIVE DENSITY OF GRANULAR SOILS:

N — Blows/ft.	Relative Density
0 — 3	Very Loose
4 — 9	Loose
10 — 29	Medium Dense
30 — 49	Dense
50 — 80	Very Dense
80 +	Extremely Dense

LOG OF BORING B- 1 & P- 1

PROJECT Crow River Heights	SITE Beebe Lake Road & James Avenue NE Hanover, Minnesota
CLIENT Semler Construction, Inc.	ARCHITECT-ENGINEER LSJ Engineering, Inc.

SURFACE ELEVATION 984.6

DEPTH, FEET	SAMPLE NUMBER AND TYPE	WATER LEVEL	STRATA CHANGE, FEET	DESCRIPTION OF MATERIAL	SPECIAL TEST RESULTS	N-VALUE (BLOWS/FT.)
	1SS		2.0	Brown SILTY SANDY CLAY, trace gravel - soft - (CL) (FILL)		4
	2SS		3.5	Dark brown CLAYEY SILT WITH ORGANICS - soft - (ML-OL)		4
			4.0	Brown and gray SILTY CLAY, trace sand - (CL)		
5	3SS		6.0	Gray CLAYEY SILT - stiff - (ML)		10
	4SS	▽	9.0	Brown and gray SILTY CLAY, trace sand - stiff - (CL)		14
10	5SS	▼	13.0	Gray SILTY SANDY CLAY, trace gravel - stiff - (CL)		13
15	6SS			Brown and gray SILTY CLAY WITH SAND, trace gravel - very stiff - (CL)		19
				End of boring at 15 feet Hollow stem auger used full depth Piezometer installed to 14 feet Top of riser elevation = 985.7 feet		

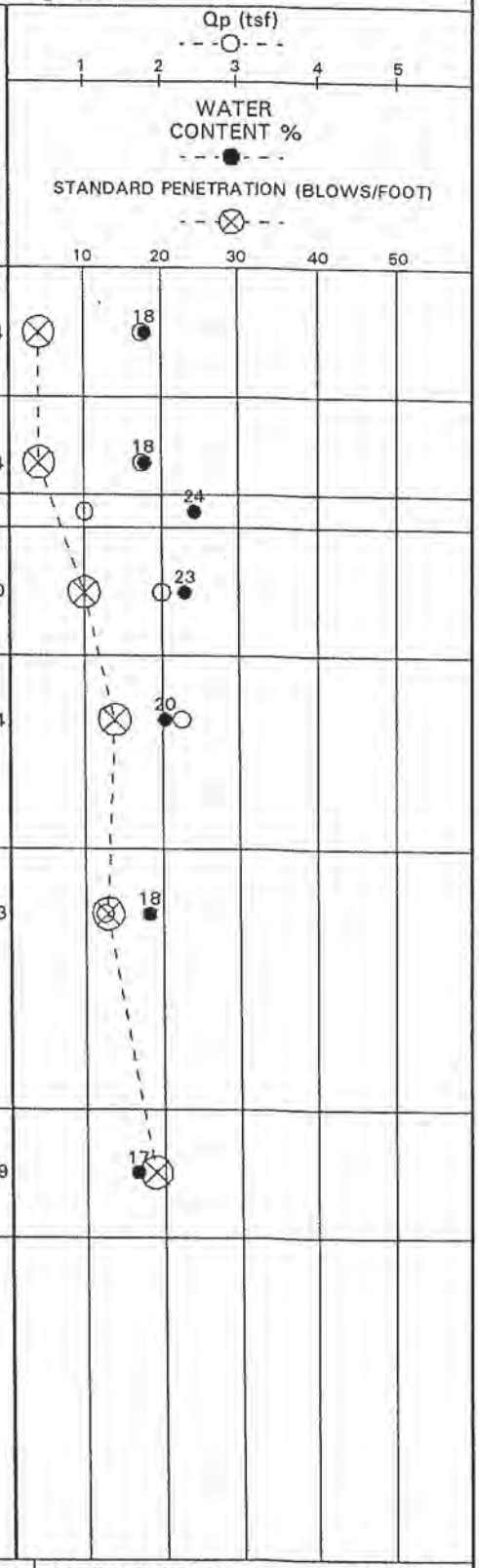

WATER LEVEL OBSERVATIONS	
W.L.	Groundwater not encountered
W.L.	while drilling
W.L. ▼	10 feet after HSA removal
▽	7.9' after piezometer install
Boring caved at 14 feet after HSA removal	

GME CONSULTANTS, INC.
Geotechnical · Materials Environmental
14000 21st Avenue North
Minneapolis, Minnesota 55447
(612) 559-1859

BORING STARTED	6/29/99		
BORING COMPLETED	6/29/99		
RIG	BK51HD	DRILLER	BM
DRAWN	KMB	APPROVED	CMA
JOB #	8416	SHEET	1 of 1

The stratification lines represent approximate boundaries between soil types; insitu the transition may be gradual.

LOG OF BORING B- 2

PROJECT Crow River Heights	SITE Beebe Lake Road & James Avenue NE Hanover, Minnesota
CLIENT Semler Construction, Inc.	ARCHITECT-ENGINEER LSJ Engineering, Inc.

SURFACE ELEVATION 988.7

DEPTH, FEET	SAMPLE NUMBER AND TYPE	WATER LEVEL	STRATA CHANGE, FEET	DESCRIPTION OF MATERIAL	SPECIAL TEST RESULTS	N-VALUE (BLOWS/FT.)
	1SS		0.7	Brown and dark brown SILTY CLAY, trace organics - (CL-OL) (Topsoil)		
			2.0	Gray brown SILTY CLAY - firm - (CL)		6
	2SS		4.0	Brown SILTY SANDY CLAY, trace gravel - firm - (CL)		7
5	3SS			Brown and gray SILTY SANDY CLAY, trace gravel - stiff to very stiff - (CL)		11
	4SS		9.0			20
10	5SS		13.0	Gray brown SILTY CLAY WITH SAND, trace gravel - very stiff - (CL)		19
15	6SS			Gray brown SILTY SANDY CLAY, trace gravel - very stiff - (CL)		26
				End of boring at 15 feet Hollow stem auger used full depth Borehole backfilled with cuttings		

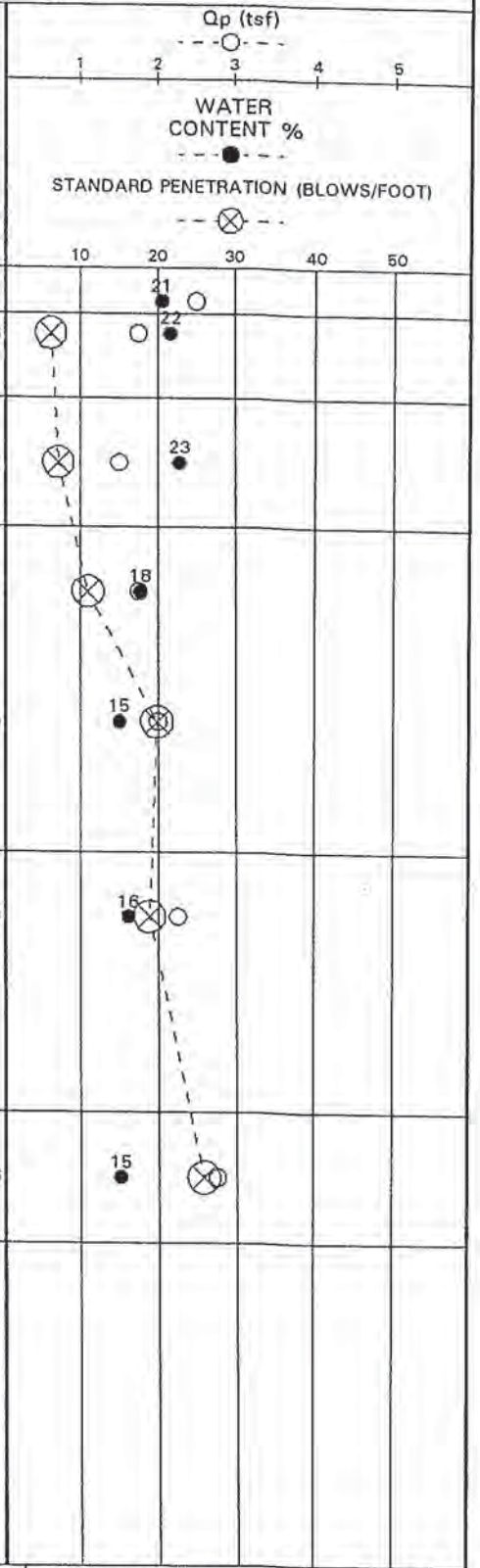

WATER LEVEL OBSERVATIONS	
W.L.	Groundwater not encountered
W.L.	while drilling or after
W.L.	HSA removal

Boring caved at 12.2 feet after HSA removal

GME CONSULTANTS, INC.
Geotechnical · Materials Environmental
14000 21st Avenue North
Minneapolis, Minnesota 55447
(612) 559-1859

BORING STARTED	6/28/99		
BORING COMPLETED	6/28/99		
RIG	BK51HD	DRILLER	BM
DRAWN	KMB	APPROVED	CMA
JOB #	8416	SHEET	1 of 1

The stratification lines represent approximate boundaries between soil types; insitu the transition may be gradual.

LOG OF BORING B- 3

PROJECT	SITE
Crow River Heights	Beebe Lake Road & James Avenue NE Hanover, Minnesota
CLIENT	**ARCHITECT-ENGINEER**
Semler Construction, Inc.	LSJ Engineering, Inc.

SURFACE ELEVATION 973.9

DEPTH, FEET	SAMPLE NUMBER AND TYPE	WATER LEVEL	STRATA CHANGE, FEET	DESCRIPTION OF MATERIAL	SPECIAL TEST RESULTS	N-VALUE (BLOWS/FT.)
	1SS		2.0	Brown and dark brown SILTY SANDY CLAY, trace organics - stiff - (CL-OL) (Topsoil)		8
	2SS		4.0	Brown and gray SILTY CLAY WITH SAND, trace gravel - stiff - (CL)		11
5	3SS			Brown SILTY SANDY CLAY, trace gravel - very stiff - (CL)		16
	4SS					26
10	5SS					22
			13.0			
	6SS			Gray SILTY SANDY CLAY, trace gravel, sand seam - very stiff - (CL)		17
15				End of boring at 15 feet Hollow stem auger used full depth Borehole backfilled with cuttings		

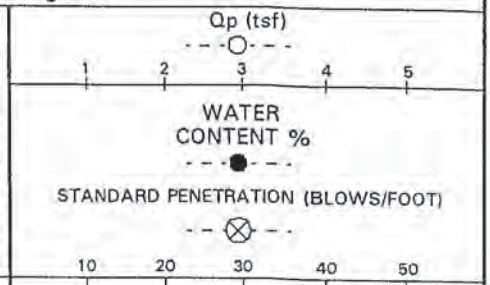

WATER LEVEL OBSERVATIONS	
W.L.	Groundwater not encountered
W.L.	while drilling or after
W.L.	HSA removal

Boring caved at 13 feet after HSA removal

GME CONSULTANTS, INC.
Geotechnical · Materials Environmental
14000 21st Avenue North
Minneapolis, Minnesota 55447
(612) 559-1859

BORING STARTED	6/25/99		
BORING COMPLETED	6/25/99		
RIG	BK51HD	DRILLER	BM
DRAWN	KMB	APPROVED	CMA
JOB #	8416	SHEET	1 of 1

The stratification lines represent approximate boundaries between soil types; insitu the transition may be gradual.

LOG OF BORING B-4 & P-4

PROJECT Crow River Heights	SITE Beebe Lake Road & James Avenue NE Hanover, Minnesota
CLIENT Semler Construction, Inc.	ARCHITECT-ENGINEER LSJ Engineering, Inc.

SURFACE ELEVATION 963.9

DEPTH, FEET	SAMPLE NUMBER AND TYPE	WATER LEVEL	STRATA CHANGE, FEET	DESCRIPTION OF MATERIAL	SPECIAL TEST RESULTS	N-VALUE (BLOWS/FT.)
			0.7	Dark brown CLAYEY SILT WITH ORGANICS - (ML-OL) (Topsoil)		
	1SS			Brown SILTY CLAY WITH SAND - firm to very stiff - (CL)		6
	2SS					11
5	3SS					13
	4SS					18
			9.0			
10	5SS			Brown SILTY SANDY CLAY, trace gravel - very stiff - (CL)		18
			13.0			
	6SS			Brown SILTY SANDY CLAY - very stiff - (CL)		24
15						
				End of boring at 15 feet Hollow stem auger used full depth Piezometer installed to 13 feet Top of riser elevation = 966.4 feet		

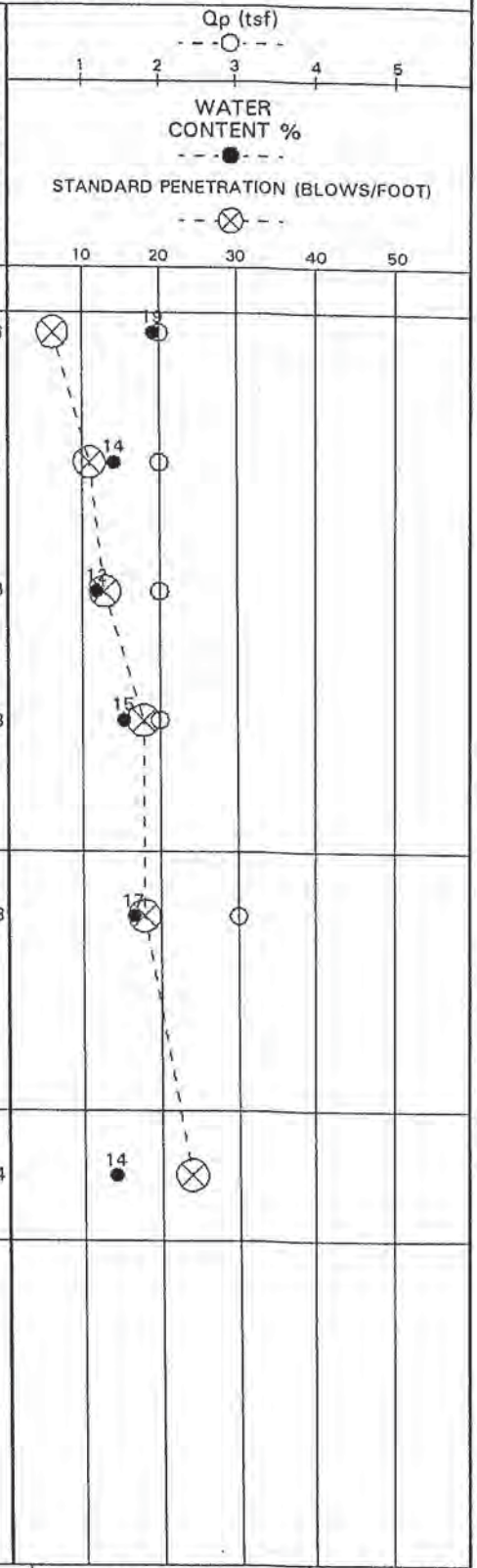

WATER LEVEL OBSERVATIONS	
W.L.	Groundwater not encountered
W.L.	while drilling or after
W.L.	HSA removal

Boring caved at 13.2 feet after HSA removal

GME CONSULTANTS, INC.
Geotechnical · Materials Environmental
14000 21st Avenue North
Minneapolis, Minnesota 55447
(612) 559-1859

BORING STARTED	6/28/99		
BORING COMPLETED	6/28/99		
RIG	BK51HD	DRILLER	BM
DRAWN	KMB	APPROVED	CMA
JOB #	8416	SHEET	1 of 1

The stratification lines represent approximate boundaries between soil types; insitu the transition may be gradual.

LOG OF BORING B- 5

PROJECT Crow River Heights	SITE Beebe Lake Road & James Avenue NE Hanover, Minnesota
CLIENT Semler Construction, Inc.	ARCHITECT-ENGINEER LSJ Engineering, Inc.

SURFACE ELEVATION 962.7

DEPTH, FEET	SAMPLE NUMBER AND TYPE	WATER LEVEL	STRATA CHANGE, FEET	DESCRIPTION OF MATERIAL	SPECIAL TEST RESULTS	N-VALUE (BLOWS/FT.)
	1SS		1.5	Dark brown CLAYEY SILT WITH ORGANICS - firm - (ML-OL) (Topsoil)		5
	2SS			Brown and gray SILTY SANDY CLAY, trace gravel - firm - (CL)		6
5	3SS					6
	4SS		9.0			5
10	5SS		13.0	Brown SILTY CLAY WITH SAND, trace gravel - stiff - (CL)		14
15	6SS			Brown SILTY SANDY CLAY, trace gravel - stiff - (CL)		15
				End of boring at 15 feet Hollow stem auger used full depth Borehole backfilled with cuttings		

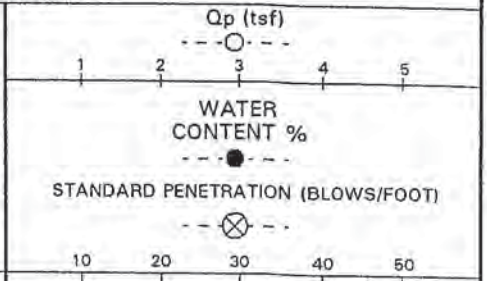

WATER LEVEL OBSERVATIONS	
W.L.	Groundwater not encountered
W.L.	while drilling or after
W.L.	HSA removal

Boring caved at 13 feet after HSA removal

GME CONSULTANTS, INC.
Geotechnical · Materials Environmental
14000 21st Avenue North
Minneapolis, Minnesota 55447
(612) 559-1859

BORING STARTED	6/25/99		
BORING COMPLETED	6/25/99		
RIG	BK51HD	DRILLER	BM
DRAWN	KMB	APPROVED	CMA
JOB #	8416	SHEET	1 of 1

The stratification lines represent approximate boundaries between soil types; insitu the transition may be gradual.

LOG OF BORING B- 6

PROJECT Crow River Heights	SITE Beebe Lake Road & James Avenue NE Hanover, Minnesota
CLIENT Semler Construction, Inc.	ARCHITECT-ENGINEER LSJ Engineering, Inc.

SURFACE ELEVATION 979.5

DEPTH, FEET	SAMPLE NUMBER AND TYPE	WATER LEVEL	STRATA CHANGE, FEET	DESCRIPTION OF MATERIAL	SPECIAL TEST RESULTS	N-VALUE (BLOWS/FT.)
			0.7	Dark brown CLAYEY SILT WITH ORGANICS - (ML-OL) (Topsoil)		
	1SS		2.0	Brown SILTY SANDY CLAY, trace gravel - firm - (CL)		7
	2SS			Brown SILTY CLAY WITH SAND, trace gravel - stiff to very stiff - (CL)		12
5	3SS					15
	4SS		9.0			26
10	5SS		13.0	Gray brown SILTY SANDY CLAY, trace gravel - very stiff - (CL)		24
	6SS			Gray SILTY SANDY CLAY, trace gravel - stiff - (CL)		13
15				End of boring at 15 feet Hollow stem auger used full depth Borehole backfilled with cuttings		

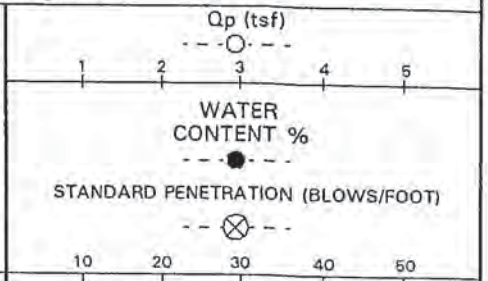

WATER LEVEL OBSERVATIONS	
W.L.	Groundwater not encountered
W.L.	while drilling or after
W.L.	HSA removal

Boring caved at 14 feet after HSA removal

GME CONSULTANTS, INC.
Geotechnical · Materials Environmental
14000 21st Avenue North
Minneapolis, Minnesota 55447
(612) 559-1859

BORING STARTED	6/28/99		
BORING COMPLETED	6/28/99		
RIG	BK51HD	DRILLER	BM
DRAWN	KMB	APPROVED	CMA
JOB #	8416	SHEET	1 of 1

The stratification lines represent approximate boundaries between soil types; insitu the transition may be gradual.

LOG OF BORING B- 7 & P- 7

PROJECT Crow River Heights	SITE Beebe Lake Road & James Avenue NE Hanover, Minnesota
CLIENT Semler Construction, Inc.	ARCHITECT-ENGINEER LSJ Engineering, Inc.

SURFACE ELEVATION 961.5

DEPTH, FEET	SAMPLE NUMBER AND TYPE	WATER LEVEL	STRATA CHANGE, FEET	DESCRIPTION OF MATERIAL	SPECIAL TEST RESULTS	N-VALUE (BLOWS/FT.)
	1SS		2.0	Brown SANDY SILT WITH ORGANICS - loose - (ML-OL) (Topsoil)		9
	2SS			Brown SILTY CLAY WITH SAND, trace gravel - stiff - (CL)		13
5	3SS		6.0			11
	4SS	▽	9.0	Brown and gray SILTY CLAY WITH SAND, trace gravel, sand seams - very stiff - (CL)		22
10	5SS	▼	13.0	Gray SILTY CLAY WITH SAND, trace gravel - stiff - (CL)		10
15	6SS			Gray SILTY SANDY CLAY, trace gravel - stiff - (CL)		11
				End of boring at 15 feet Hollow stem auger used full depth Piezometer installed to 12.5 feet Top of riser elevation = 964.0 feet		

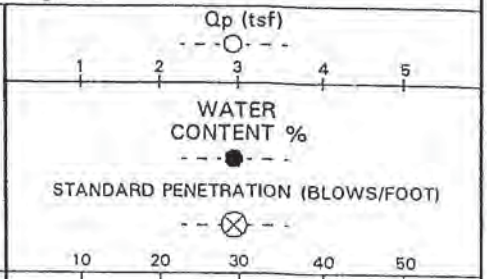

WATER LEVEL OBSERVATIONS

W.L. ▽ 9 feet while drilling
W.L. ▼ 12 feet after HSA removal
W.L. ▽ 8.3 feet, 953.2 feet 7/26/99

GME CONSULTANTS, INC.
Geotechnical · Materials Environmental
14000 21st Avenue North
Minneapolis, Minnesota 55447
(612) 559-1859

BORING STARTED	7/1/99		
BORING COMPLETED	7/1/99		
RIG	BK51HD	DRILLER	BM
DRAWN	KMB	APPROVED	CMA
JOB #	8416	SHEET	1 of 1

The stratification lines represent approximate boundaries between soil types; insitu the transition may be gradual.

LOG OF BORING B- 8

PROJECT Crow River Heights	SITE Beebe Lake Road & James Avenue NE Hanover, Minnesota
CLIENT Semler Construction, Inc.	ARCHITECT-ENGINEER LSJ Engineering, Inc.

SURFACE ELEVATION 963.4

DEPTH, FEET	SAMPLE NUMBER AND TYPE	WATER LEVEL	STRATA CHANGE, FEET	DESCRIPTION OF MATERIAL	SPECIAL TEST RESULTS	N-VALUE (BLOWS/FT.)
			0.5	Dark brown CLAYEY SILT WITH ORGANICS - (ML-OL) (Topsoil)		
	1SS			Brown SILTY SANDY CLAY, trace gravel, sand seams - firm to stiff - (CL)		7
	2SS		4.0			14
5	3SS			Brown SILTY SANDY CLAY, trace gravel - stiff to very stiff - (CL)		14
	4SS					25
10	5SS		13.0			27
	6SS			Gray SILTY SANDY CLAY, trace gravel - very stiff - (CL)		23
15				End of boring at 15 feet Hollow stem auger used full depth Borehole backfilled with cuttings		

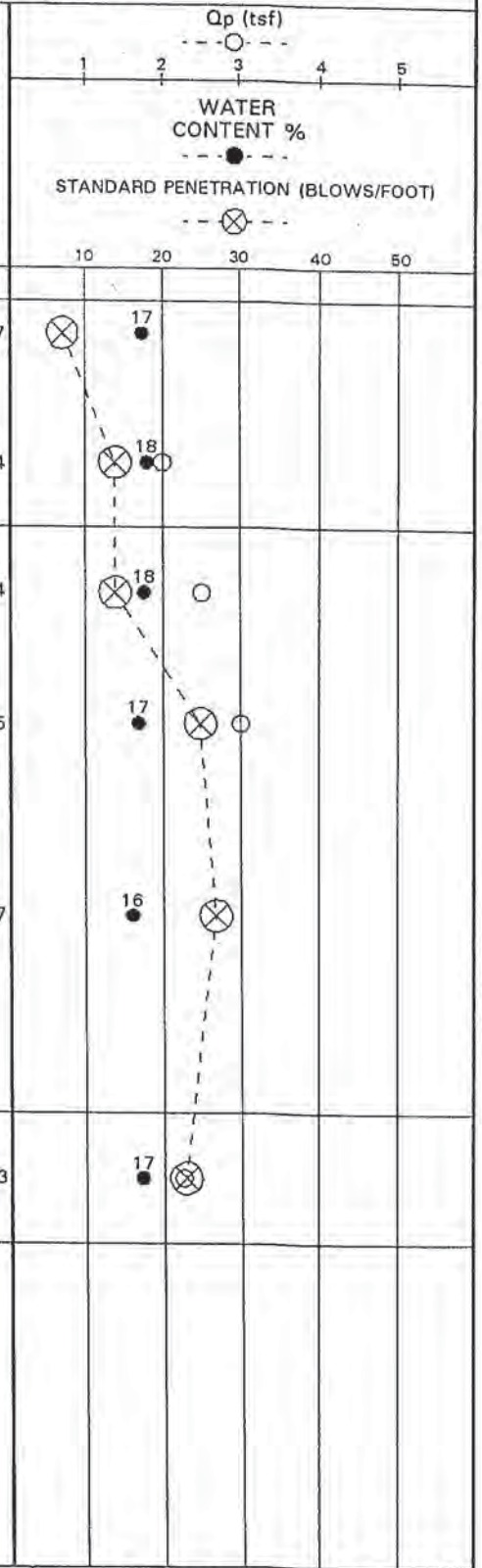

WATER LEVEL OBSERVATIONS	
W.L.	Groundwater not encountered
W.L.	while drilling or after
W.L.	HSA removal

Boring caved at 12.3 feet after HSA removal

GME CONSULTANTS, INC.
Geotechnical · Materials Environmental
14000 21st Avenue North
Minneapolis, Minnesota 55447
(612) 559-1859

BORING STARTED	7/1/99		
BORING COMPLETED	7/1/99		
RIG	BK51HD	DRILLER	BM
DRAWN	KMB	APPROVED	CMA
JOB #	8416	SHEET	1 of 1

The stratification lines represent approximate boundaries between soil types; insitu the transition may be gradual.

LOG OF BORING B- 9

PROJECT Crow River Heights	SITE Beebe Lake Road & James Avenue NE Hanover, Minnesota
CLIENT Semler Construction, Inc.	ARCHITECT-ENGINEER LSJ Engineering, Inc.

SURFACE ELEVATION 951.8

DEPTH, FEET	SAMPLE NUMBER AND TYPE	WATER LEVEL	STRATA CHANGE, FEET	DESCRIPTION OF MATERIAL	SPECIAL TEST RESULTS	N-VALUE (BLOWS/FT.)
	1SS		1.5	Dark brown CLAYEY SILT WITH ORGANICS - stiff - (ML-OL) (Topsoil)		11
			2.0	Brown SILTY CLAY, trace sand - (CL)		
	2SS		4.0	Brown fine SILTY SAND, trace gravel - medium dense - damp - (SM)		10
5	3SS			Gray brown SILTY CLAY, trace sand, roots, sand seams - stiff - (CL)		10
	4SS		9.0			13
10	5SS		13.0	Brown SANDY SILT, trace clay - medium dense - (ML)		12
15	6SS			Gray SILTY SANDY CLAY, trace gravel - stiff - (CL)		12
				End of boring at 15 feet Hollow stem auger used full depth Borehole backfilled with cuttings		

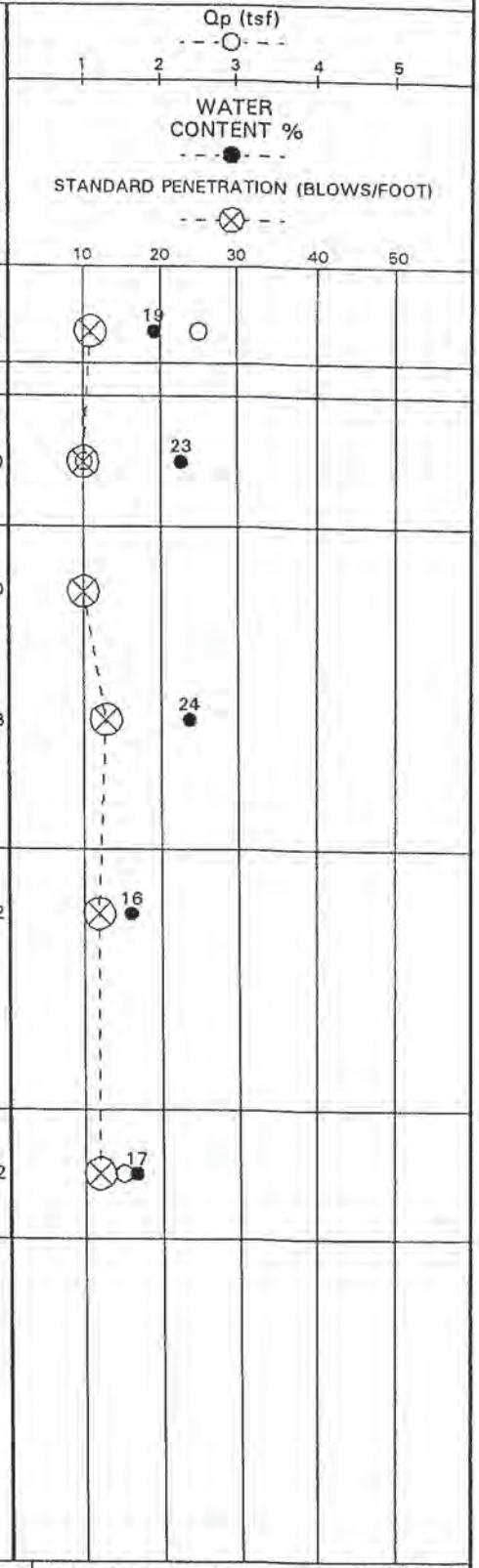

WATER LEVEL OBSERVATIONS	
W.L.	Groundwater not encountered
W.L.	while drilling or after
W.L.	HSA removal

Boring caved at 13.3 feet after HSA removal

GME CONSULTANTS, INC.
Geotechnical · Materials Environmental
14000 21st Avenue North
Minneapolis, Minnesota 55447
(612) 559-1859

BORING STARTED	6/28/99		
BORING COMPLETED	6/28/99		
RIG	BK51HD	DRILLER	BM
DRAWN	KMB	APPROVED	CMA
JOB #	8416	SHEET	1 of 1

The stratification lines represent approximate boundaries between soil types; insitu the transition may be gradual.

LOG OF BORING B-10 & P-10

PROJECT Crow River Heights	SITE Beebe Lake Road & James Avenue NE Hanover, Minnesota
CLIENT Semler Construction, Inc.	ARCHITECT-ENGINEER LSJ Engineering, Inc.

SURFACE ELEVATION 954.8

DEPTH, FEET	SAMPLE NUMBER AND TYPE	WATER LEVEL	STRATA CHANGE, FEET	DESCRIPTION OF MATERIAL	SPECIAL TEST RESULTS	N-VALUE (BLOWS/FT.)
			0.6	Dark brown SANDY SILT WITH ORGANICS - (ML-OL) (Topsoil)		
	1SS		2.0	Brown SILTY SANDY CLAY, trace gravel - stiff - (CL)		11
	2SS		4.0	Gray SILTY CLAY - stiff - (CL)		11
5	3SS			Gray and brown SILTY CLAY, trace sand - stiff - (CL)		8
	4SS	▽	9.0			9
10	5SS	▼	14.0	Gray SILTY SANDY CLAY, trace gravel - stiff - (CL)		15
15	6SS			Gray fine to medium SILTY SAND, trace clay, gravel - medium dense - wet - (SM)		24
				End of boring at 15 feet Hollow stem auger used full depth Borehole backfilled with cuttings Piezometer installed to 14 feet Top of riser elevation = 955.8 feet		

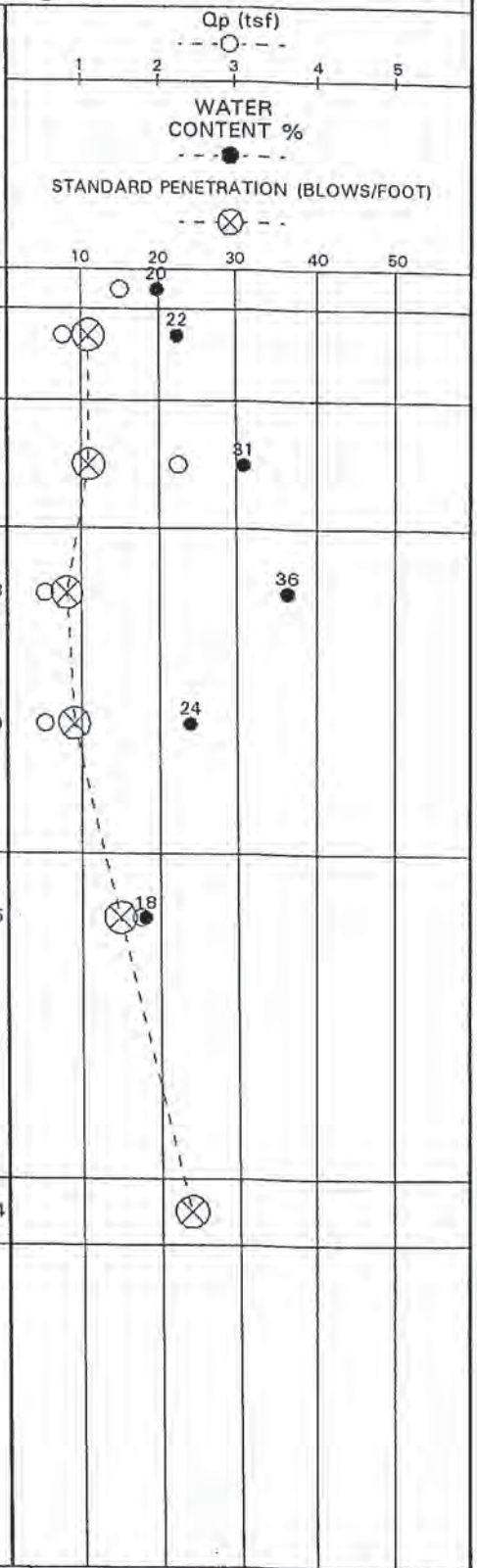

WATER LEVEL OBSERVATIONS
W.L. ▽ 14 feet while drilling
W.L. ▼ 14 feet after HSA removal
W.L. ▽ 8.4 feet, 946.4 feet 7/26/99

Boring caved at 14 feet after HSA removal

GME CONSULTANTS, INC.
Geotechnical · Materials Environmental
14000 21st Avenue North
Minneapolis, Minnesota 55447
(612) 559-1869

BORING STARTED	7/5/99		
BORING COMPLETED	7/5/99		
RIG	BK51HD	DRILLER	BM
DRAWN	KMB	APPROVED	CMA
JOB #	8416	SHEET	1 of 1

The stratification lines represent approximate boundaries between soil types; insitu the transition may be gradual.

LOG OF BORING B-11

PROJECT Crow River Heights	SITE Beebe Lake Road & James Avenue NE Hanover, Minnesota
CLIENT Semler Construction, Inc.	ARCHITECT-ENGINEER LSJ Engineering, Inc.

SURFACE ELEVATION 961.9

DEPTH, FEET	SAMPLE NUMBER AND TYPE	WATER LEVEL	STRATA CHANGE, FEET	DESCRIPTION OF MATERIAL	SPECIAL TEST RESULTS	N-VALUE (BLOWS/FT.)
			0.6	Dark brown CLAYEY SILT WITH ORGANICS - (ML-OL) (Topsoil)		
	1SS			Brown SILTY CLAY WITH SAND, trace gravel - firm - (CL)		6
	2SS		4.0			7
5	3SS			Brown SILTY SANDY CLAY, trace gravel - stiff - (CL)		8
	4SS		9.0			13
10	5SS			Brown SILTY SANDY CLAY, trace gravel - very stiff - (CL)		18
15	6SS					16
				End of boring at 15 feet Hollow stem auger used full depth Borehole backfilled with cuttings		

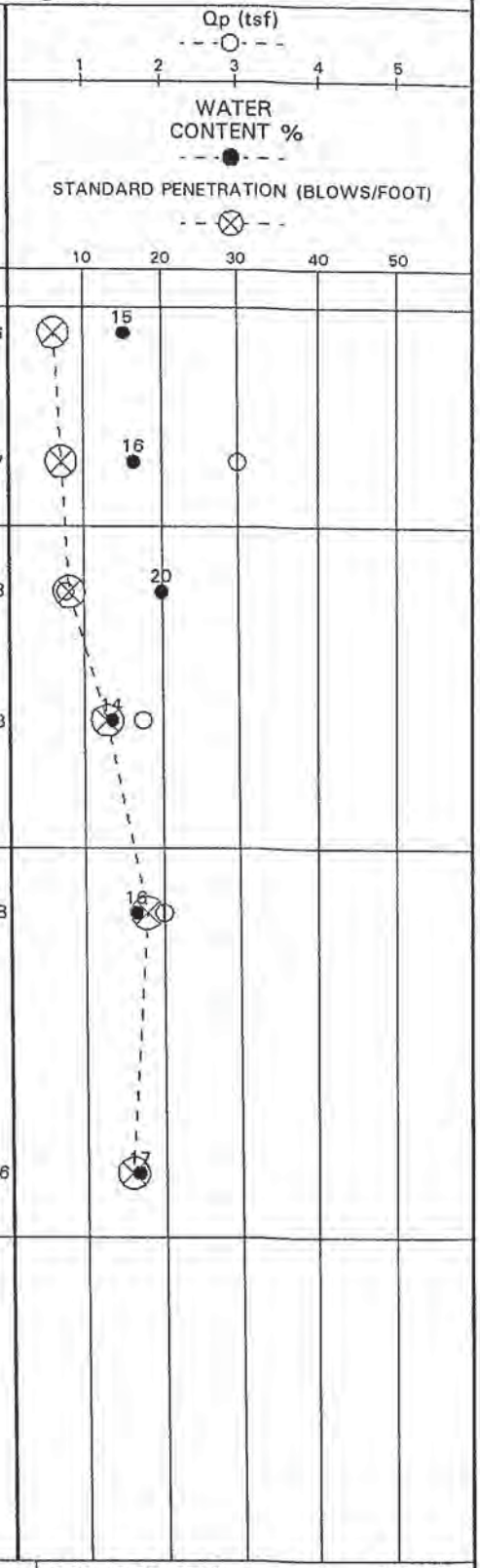

WATER LEVEL OBSERVATIONS	
W.L.	Groundwater not encountered
W.L.	while drilling or after
W.L.	HSA removal

Boring caved at 13.5 feet after HSA removal

GME CONSULTANTS, INC.
Geotechnical · Materials Environmental
14000 21st Avenue North
Minneapolis, Minnesota 55447
(612) 559-1859

BORING STARTED	7/1/99		
BORING COMPLETED	7/1/99		
RIG	BK51HD	DRILLER	BM
DRAWN	KMB	APPROVED	CMA
JOB #	8416	SHEET	1 of 1

The stratification lines represent approximate boundaries between soil types; insitu the transition may be gradual.

LOG OF BORING B-12

PROJECT	SITE
Crow River Heights	Beebe Lake Road & James Avenue NE Hanover, Minnesota
CLIENT	**ARCHITECT-ENGINEER**
Semler Construction, Inc.	LSJ Engineering, Inc.

SURFACE ELEVATION 962.1

DEPTH, FEET	SAMPLE NUMBER AND TYPE	WATER LEVEL	STRATA CHANGE, FEET	DESCRIPTION OF MATERIAL	SPECIAL TEST RESULTS	N-VALUE (BLOWS/FT.)
			0.5	Dark brown SANDY SILT WITH ORGANICS - (ML-OL) (Topsoil)		
	1SS		2.0	Brown SILTY SANDY CLAY, trace gravel - firm - (CL)		6
	2SS			Brown SILTY CLAY WITH SAND, trace gravel - stiff to very stiff - (CL)		14
5	3SS					17
	4SS		9.0			22
10	5SS		13.0	Brown SILTY SANDY CLAY, trace gravel, sand seams - stiff - (CL)		13
15	6SS			Brown SILTY CLAYEY SAND, trace gravel - medium dense - damp - (SC)		18
				End of boring at 15 feet Hollow stem auger used full depth Borehole backfilled with cuttings		

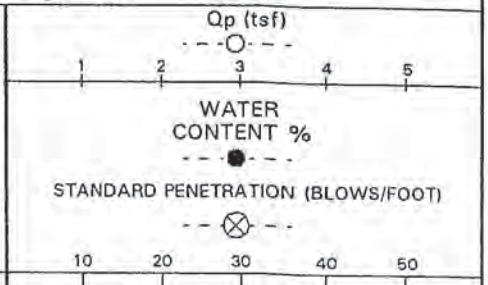

WATER LEVEL OBSERVATIONS	
W.L.	Groundwater not encountered
W.L.	while drilling or after
W.L.	HSA removal

Boring caved at 12.8 feet after HSA removal

GME CONSULTANTS, INC.
Geotechnical · Materials Environmental
14000 21st Avenue North
Minneapolis, Minnesota 55447
(612) 559-1859

BORING STARTED	7/6/99		
BORING COMPLETED	7/6/99		
RIG	BK51HD	DRILLER	BM
DRAWN	KMB	APPROVED	CMA
JOB #	8416	SHEET	1 of 1

The stratification lines represent approximate boundaries between soil types; insitu the transition may be gradual.

LOG OF BORING B-13

PROJECT	SITE
Crow River Heights	Beebe Lake Road & James Avenue NE Hanover, Minnesota
CLIENT	**ARCHITECT-ENGINEER**
Semler Construction, Inc.	LSJ Engineering, Inc.

SURFACE ELEVATION 963.7

DEPTH, FEET	SAMPLE NUMBER AND TYPE	WATER LEVEL	STRATA CHANGE, FEET	DESCRIPTION OF MATERIAL	SPECIAL TEST RESULTS	N-VALUE (BLOWS/FT.)
	1SS		0.6	Dark brown SANDY SILT WITH ORGANICS - (ML-OL) (Topsoil)		4
			2.0	Brown SILTY CLAY WITH SAND, trace gravel - soft - (CL)		
	2SS			Brown SILTY SANDY CLAY, trace gravel - stiff to very stiff - (CL)		10
5	3SS					11
	4SS		9.0			20
10	5SS			Brown fine SAND, trace silt - moist - (SP)		22
		▽	13.0			
	6SS			Brown fine to coarse SAND WITH GRAVEL, trace silt - dense - wet - (SP)		51
15				End of boring at 15 feet Hollow stem auger used full depth Borehole backfilled with cuttings		

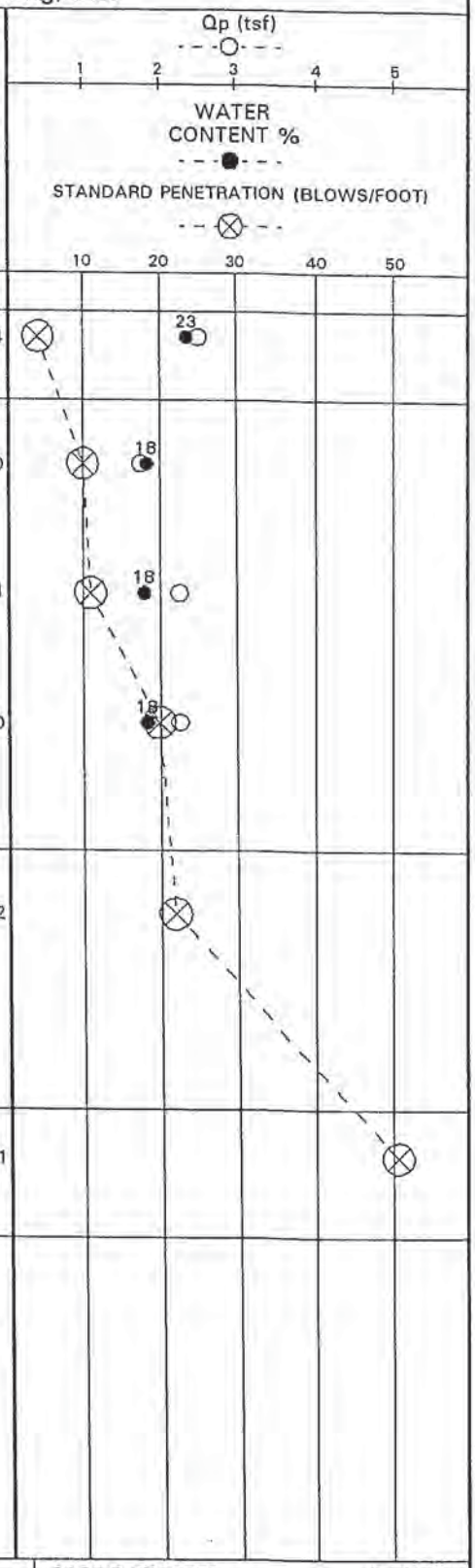

WATER LEVEL OBSERVATIONS	
W.L.	▽ 13 feet while drilling
W.L.	
W.L.	

Boring caved at 12.6 feet after HSA removal

GME CONSULTANTS, INC.
Geotechnical · Materials Environmental
14000 21st Avenue North
Minneapolis, Minnesota 55447
(612) 559-1859

BORING STARTED	7/6/99		
BORING COMPLETED	7/6/99		
RIG	BK51HD	DRILLER	BM
DRAWN	KMB	APPROVED	CMA
JOB #	8416	SHEET	1 of 1

The stratification lines represent approximate boundaries between soil types; insitu the transition may be gradual.

LOG OF BORING B-14

PROJECT Crow River Heights	SITE Beebe Lake Road & James Avenue NE Hanover, Minnesota
CLIENT Semler Construction, Inc.	ARCHITECT-ENGINEER LSJ Engineering, Inc.

SURFACE ELEVATION 928.6

DEPTH, FEET	SAMPLE NUMBER AND TYPE	WATER LEVEL	STRATA CHANGE, FEET	DESCRIPTION OF MATERIAL	SPECIAL TEST RESULTS	N-VALUE (BLOWS/FT.)	Qp (tsf)	WATER CONTENT %	STANDARD PENETRATION (BLOWS/FOOT)
	1SS		1.0	Black fine SILTY SAND, trace organics - (SM-OL) (Topsoil) (FILL)		6		33	
		▽	3.0	Brown fine to medium SILTY SAND, trace gravel - loose - moist to wet - (SM) (FILL)					
	2SS			Dark brown sapric PEAT - soft - (Pt)		2			87
5	3SS		6.0			2			159
	4SS		9.0	Gray ORGANIC SILT - soft - (OL)		2			80
10	5SS			Gray SILTY SANDY CLAY, trace gravel - soft to stiff - (CL)		3		24	
	6SS					9		21	
15				End of boring at 15 feet Hollow stem auger used full depth Borehole backfilled with cuttings					

WATER LEVEL OBSERVATIONS	
W.L.	☑ 2 feet while drilling
W.L.	
W.L.	

GME CONSULTANTS, INC.
Geotechnical · Materials Environmental
14000 21st Avenue North
Minneapolis, Minnesota 55447
(612) 559-1859

BORING STARTED	7/6/99		
BORING COMPLETED	7/6/99		
RIG	BK51HD	DRILLER	BM
DRAWN	KMB	APPROVED	CMA
JOB #	8416	SHEET	1 of 1

The stratification lines represent approximate boundaries between soil types; insitu the transition may be gradual.

LOG OF BORING B-15

PROJECT Crow River Heights	SITE Beebe Lake Road & James Avenue NE Hanover, Minnesota
CLIENT Semler Construction, Inc.	ARCHITECT-ENGINEER LSJ Engineering, Inc.

SURFACE ELEVATION 964.7

DEPTH, FEET	SAMPLE NUMBER AND TYPE	WATER LEVEL	STRATA CHANGE, FEET	DESCRIPTION OF MATERIAL	SPECIAL TEST RESULTS	N-VALUE (BLOWS/FT.)
			0.5	Dark brown CLAYEY SILT WITH ORGANICS - (ML-OL) (Topsoil)		
	1SS			Brown SILTY CLAY WITH SAND, trace gravel - firm to very stiff - (CL)		7
	2SS					12
5	3SS					10
	4SS					13
10	5SS					19
	6SS		14.0			41
15				Brown fine to medium SILTY SAND, trace gravel - dense - damp - (SM)		
				End of boring at 15 feet Hollow stem auger used full depth Borehole backfilled with cuttings		

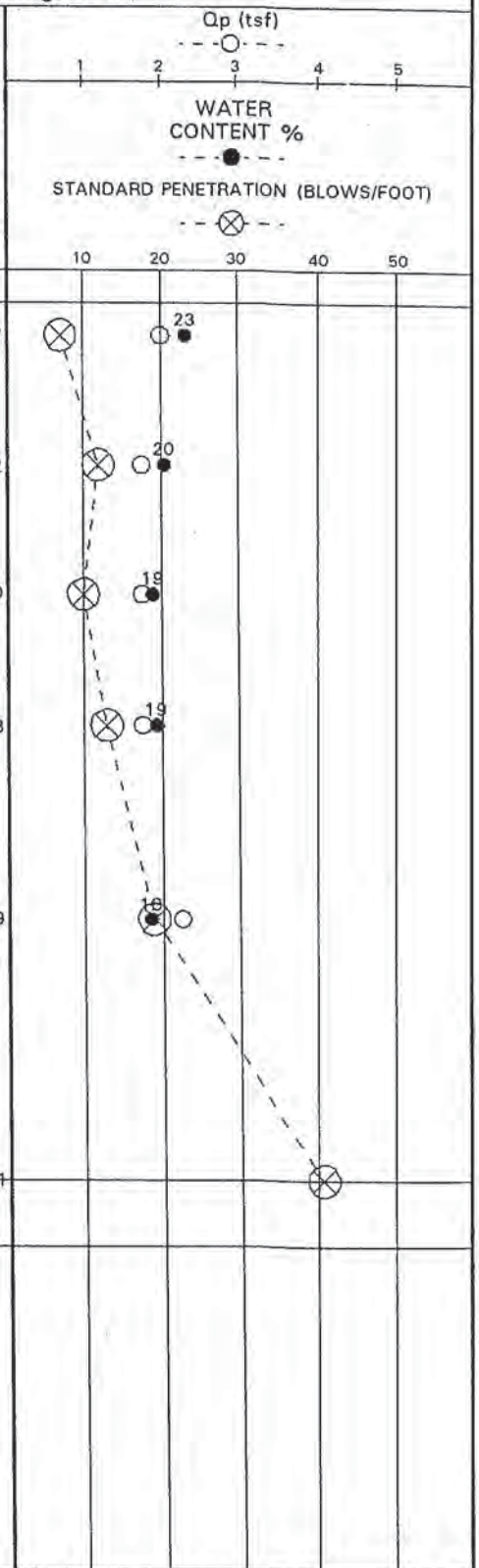

WATER LEVEL OBSERVATIONS	
W.L.	Groundwater not encountered
W.L.	while drilling or after
W.L.	HSA removal

Boring caved at 12.6 feet after HSA removal

GME CONSULTANTS, INC.
Geotechnical · Materials Environmental
14000 21st Avenue North
Minneapolis, Minnesota 55447
(612) 559-1859

BORING STARTED	7/6/99		
BORING COMPLETED	7/6/99		
RIG	BK51HD	DRILLER	BM
DRAWN	KMB	APPROVED	CMA
JOB #	8416	SHEET	1 of 1

The stratification lines represent approximate boundaries between soil types; insitu the transition may be gradual.

LOG OF BORING B-16

PROJECT Crow River Heights	SITE Beebe Lake Road & James Avenue NE Hanover, Minnesota
CLIENT Semler Construction, Inc.	ARCHITECT-ENGINEER LSJ Engineering, Inc.

SURFACE ELEVATION 959.1

DEPTH, FEET	SAMPLE NUMBER AND TYPE	WATER LEVEL	STRATA CHANGE, FEET	DESCRIPTION OF MATERIAL	SPECIAL TEST RESULTS	N-VALUE (BLOWS/FT.)
	1SS		2.0	Brown SILTY SANDY CLAY, trace gravel - firm - (CL)		6
	2SS			Brown SILTY CLAY WITH SAND, trace gravel - stiff to very stiff - (CL)		8
5	3SS					11
	4SS		9.0			12
10	5SS			Brown SILTY SANDY CLAY, trace gravel - stiff to very stiff - (CL)		15
	6SS					18
15				End of boring at 15 feet Hollow stem auger used full depth Borehole backfilled with cuttings		

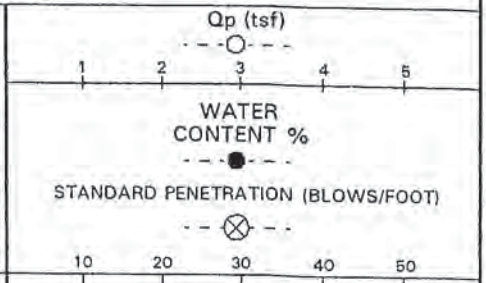

WATER LEVEL OBSERVATIONS	
W.L.	Groundwater not encountered
W.L.	while drilling or after
W.L.	HSA removal

Boring caved at 12.5 feet after HSA removal

GME CONSULTANTS, INC.
Geotechnical · Materials Environmental
14000 21st Avenue North
Minneapolis, Minnesota 55447
(612) 559-1859

BORING STARTED	7/2/99		
BORING COMPLETED	7/2/99		
RIG	BK51HD	DRILLER	BM
DRAWN	KMB	APPROVED	CMA
JOB #	8416	SHEET	1 of 1

The stratification lines represent approximate boundaries between soil types; insitu the transition may be gradual.

LOG OF BORING B-17 & P-17

PROJECT Crow River Heights	SITE Beebe Lake Road & James Avenue NE Hanover, Minnesota
CLIENT Semler Construction, Inc.	ARCHITECT-ENGINEER LSJ Engineering, Inc.

SURFACE ELEVATION 956.8

DEPTH, FEET	SAMPLE NUMBER AND TYPE	WATER LEVEL	STRATA CHANGE, FEET	DESCRIPTION OF MATERIAL	SPECIAL TEST RESULTS	N-VALUE (BLOWS/FT.)
	1SS		0.8	Brown SANDY SILT WITH ORGANICS - (ML-OL) (Topsoil)		5
			2.0	Gray brown SANDY SILT, trace gravel - loose - (ML)		
	2SS			Brown and gray SILTY SANDY CLAY, trace gravel - stiff - (CL)		12
5	3SS		6.0			11
	4SS		9.0	Brown SILTY SANDY CLAY, trace gravel - stiff - (CL)		15
10	5SS		13.0	Brown SILTY SANDY CLAY, trace sand seams - very stiff - (CL)		30
	6SS			Gray CLAYEY SILTY SAND - dense - (SC)		42
15				End of boring at 15 feet Hollow stem auger used full depth Piezometer installed to 14 feet Top of riser elevation = 958.3 feet		

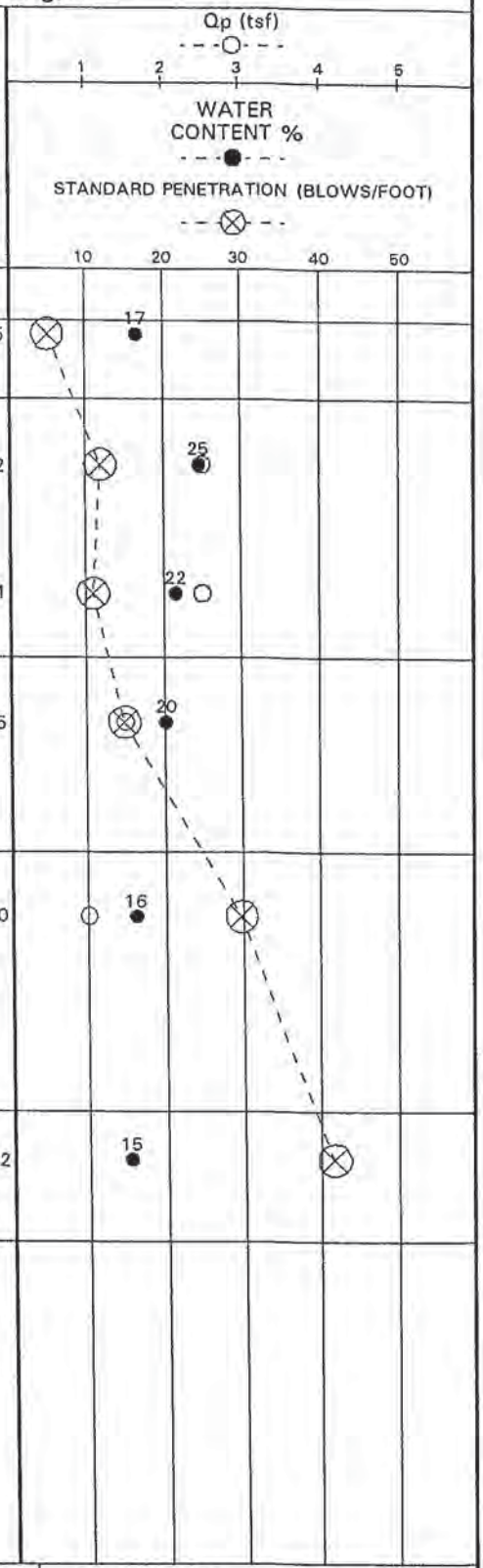

WATER LEVEL OBSERVATIONS	
W.L.	Groundwater not encountered
W.L.	while drilling or after
W.L.	HSA removal

Boring caved at 14 feet after HSA removal

GME CONSULTANTS, INC.
Geotechnical · Materials Environmental
14000 21st Avenue North
Minneapolis, Minnesota 55447
(612) 559-1859

BORING STARTED	7/2/99		
BORING COMPLETED	7/2/99		
RIG	BK51HD	DRILLER	BM
DRAWN	KMB	APPROVED	CMA
JOB #	8416	SHEET	1 of 1

The stratification lines represent approximate boundaries between soil types; insitu the transition may be gradual.

LOG OF BORING B-18

PROJECT Crow River Heights	SITE Beebe Lake Road & James Avenue NE Hanover, Minnesota
CLIENT Semler Construction, Inc.	ARCHITECT-ENGINEER LSJ Engineering, Inc.

SURFACE ELEVATION 951.1

DEPTH, FEET	SAMPLE NUMBER AND TYPE	WATER LEVEL	STRATA CHANGE, FEET	DESCRIPTION OF MATERIAL	SPECIAL TEST RESULTS	N-VALUE (BLOWS/FT.)
			0.6	Dark brown CLAYEY SILT WITH ORGANICS - (ML-OL) (Topsoil)		
	1SS		2.0	Brown SILTY CLAY, trace sand - firm - (CL)		5
	2SS		4.0	Brown fine to medium SILTY SAND, trace gravel, clay seams - loose - damp - (SM)		9
5	3SS		6.0	Brown SANDY SILT, trace sand seams - medium dense - (ML)		14
	4SS			Brown SILTY SANDY CLAY, trace gravel, sand seams - very stiff to stiff - (CL)		20
10	5SS		13.0			15
	6SS			Brown fine to medium SILTY SAND, trace gravel - dense - damp - (SM)		30
15				End of boring at 15 feet Hollow stem auger used full depth Borehole backfilled with cuttings		

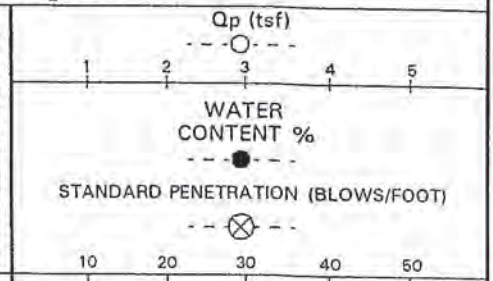

WATER LEVEL OBSERVATIONS	
W.L.	Groundwater not encountered
W.L.	while drilling or after
W.L.	HSA removal

Boring caved at 13.8 feet after HSA removal

GME CONSULTANTS, INC.
Geotechnical · Materials Environmental
14000 21st Avenue North
Minneapolis, Minnesota 55447
(612) 559-1859

BORING STARTED	7/6/99		
BORING COMPLETED	7/6/99		
RIG	BK51HD	DRILLER	BM
DRAWN	KMB	APPROVED	CMA
JOB #	8416	SHEET	1 of 1

The stratification lines represent approximate boundaries between soil types; insitu the transition may be gradual.

LOG OF BORING B-19

PROJECT Crow River Heights	SITE Beebe Lake Road & James Avenue NE Hanover, Minnesota
CLIENT Semler Construction, Inc.	ARCHITECT-ENGINEER LSJ Engineering, Inc.

SURFACE ELEVATION 950.0

DEPTH, FEET	SAMPLE NUMBER AND TYPE	WATER LEVEL	STRATA CHANGE, FEET	DESCRIPTION OF MATERIAL	SPECIAL TEST RESULTS	N-VALUE (BLOWS/FT.)
	1SS		1.0	Dark brown SANDY SILT WITH ORGANICS - loose - (ML-OL) (Topsoil)		4
	2SS			Brown and gray SILTY SANDY CLAY, trace gravel - stiff to soft - (CL)		9
5	3SS	▽	6.0			4
			7.0	Brown and gray SILTY SANDY CLAY, trace gravel - (CL)		
	4SS		10.0	Brown SILTY CLAY WITH SAND, trace gravel - stiff - (CL)		8
10	5SS	▼	13.0	Gray brown SILTY SANDY CLAY, trace gravel - very stiff - (CL)		25
15	6SS			Gray SILTY SANDY CLAY, trace gravel - very stiff - (CL)		24
				End of boring at 15 feet Hollow stem auger used full depth Borehole backfilled with cuttings		

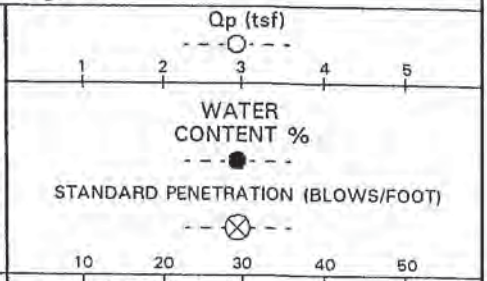

WATER LEVEL OBSERVATIONS	
W.L. ▽	6 feet while drilling
W.L. ▼	12.2 feet after HSA removal
W.L.	

Boring caved at 13.3 feet after HSA removal

GME CONSULTANTS, INC.
Geotechnical · Materials Environmental
14000 21st Avenue North
Minneapolis, Minnesota 55447
(612) 559-1859

BORING STARTED	7/2/99		
BORING COMPLETED	7/2/99		
RIG	BK51HD	DRILLER	BM
DRAWN	KMB	APPROVED	CMA
JOB #	8416	SHEET	1 of 1

The stratification lines represent approximate boundaries between soil types; insitu the transition may be gradual.

LOG OF BORING B-20 & P-20

PROJECT Crow River Heights	SITE Beebe Lake Road & James Avenue NE Hanover, Minnesota
CLIENT Semler Construction, Inc.	ARCHITECT-ENGINEER LSJ Engineering, Inc.

SURFACE ELEVATION 946.1

DEPTH, FEET	SAMPLE NUMBER AND TYPE	WATER LEVEL	STRATA CHANGE, FEET	DESCRIPTION OF MATERIAL	SPECIAL TEST RESULTS	N-VALUE (BLOWS/FT.)
	1SS		2.0	Brown SANDY CLAY WITH SILT, trace gravel - stiff - (CL)		8
	2SS			Brown SILTY SANDY CLAY, trace gravel - very stiff to hard - (CL)		18
5	3SS					18
	4SS					32
10	5SS					19
	6SS		13.0	Brown SANDY CLAY WITH SILT, trace gravel - very hard - (CL)		50/0.5
15				End of boring at 15 feet Hollow stem auger used full depth Piezometer installed to 14.5 feet Top of riser elevation = 947.6 feet		

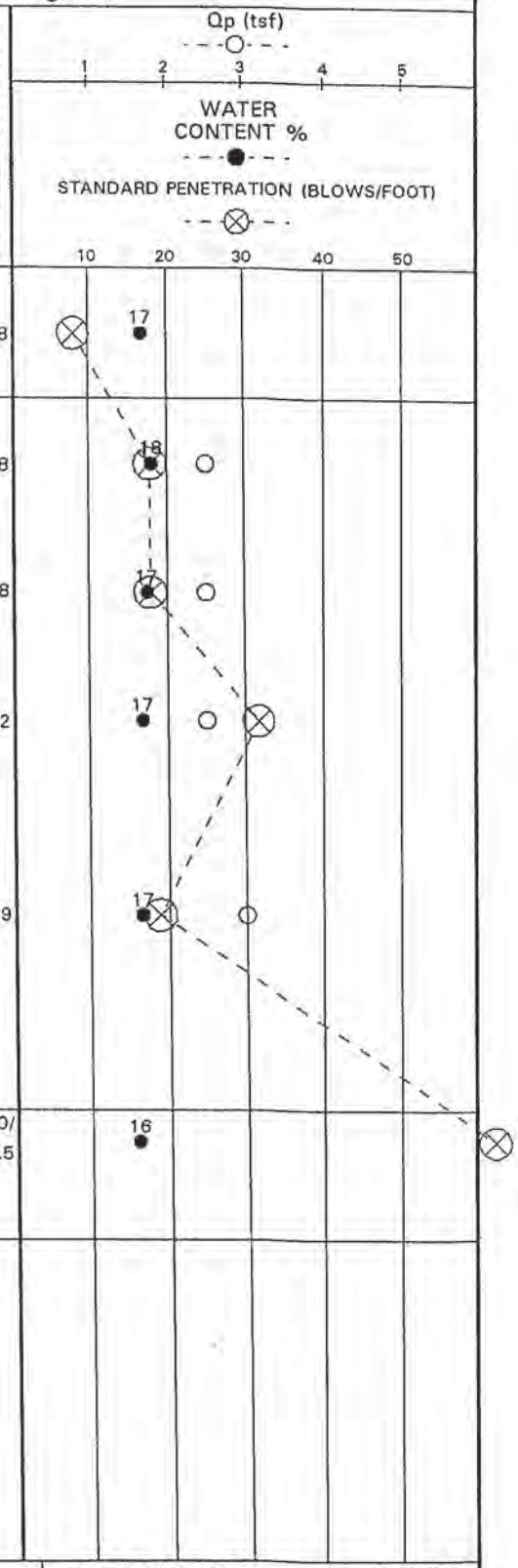

WATER LEVEL OBSERVATIONS	
W.L.	Groundwater not encountered
W.L.	while drilling or after
W.L.	HSA removal

Boring caved at 14.5 feet after HSA removal

GME CONSULTANTS, INC.
Geotechnical · Materials Environmental
14000 21st Avenue North
Minneapolis, Minnesota 55447
(612) 559-1859

BORING STARTED	7/2/99		
BORING COMPLETED	7/2/99		
RIG	BK51HD	DRILLER	BM
DRAWN	KMB	APPROVED	CMA
JOB #	8416	SHEET	1 of 1

The stratification lines represent approximate boundaries between soil types; insitu the transition may be gradual.

CLASSIFICATION OF SOILS FOR ENGINEERING PURPOSES

(ASTM: D 2487 and 2488)

Major divisions			Group symbols	Typical names	Laboratory classification criteria	
Coarse-grained soils (More than half of material is *larger* than No. 200 sieve size)	Gravels (More than half of corase fraction larger than No. 4 sieve size)	Clean gravels (Little or no fines)	GW	Well-graded gravels, gravel-sand mixtures, little or no fines	Determine percentages of sand and gravel from grain-size curve. Depending on percentage of fines (fraction smaller than No. 200 sieve size), coarse-grained soils are classified as follows: Less than 5 per cent ..... GW, GP, SW, SP; More than 12 per cent ..... GM, GC, SM, SC; 5 to 12 per cent ..... *Borderline* cases requiring dual symbols	$C_u = \frac{D_{60}}{D_{10}}$ greater than 4; $C_c = \frac{(D_{30})^2}{D_{10} X D_{60}}$ between 1 and 3
			GP	Poorly graded gravels, gravel-sand mixtures, little or no fines		Not meeting all gradation requirements for GW
		Gravels with fines (Appreciable amount of fines)	GM d / GM u	Silty gravels, gravel-sand-silt mixtures	Atterberg limits below "A" line or P.I. less than 4	Above "A" line with P.I. between 4 and 7 *are borderline* cases requiring use of dual symbols
			GC	Clayey gravels, gravel-sand-clay mixtures	Atterberg limits below "A" line or P.I. greater than 7	
	Sands (More than half of coarse fraction is smaller than No. 4 sieve size)	Clean sands (Little or no fines)	SW	Well-graded sands, gravelly sands, little or no fines	$C_u = \frac{D_{60}}{D_{10}}$ greater than 6; $C_c = \frac{(D_{30})^2}{D_{10} X D_{60}}$ between 1 and 3	
			SP	Poorly graded sands, gravelly sands, little or no fines	Not meeting all gradation requirements for SW	
		Sands with fines (Appreciable amount of fines)	SM d / SM u	Silty sands, sand-silt mixtures	Atterberg limits below "A" line or P.I. less than 4	Limits plotting in hatched zone with P.I. between 4 and 7 *are borderline* cases requiring use of dual symbols.
			SC	Clayey sands, sand-clay mixtures	Atterberg limits below "A" line or P.I. greater than 7	
Fine-grained soils More than half of material is *smaller* than No. 200 sieve)	Silts and clays (Liquid limit less than 50)		ML	Inorganic silts and very fine sands, rock flour, silty or clayey fine sands or clayey silts with slight plasticity		
			CL	Inorganic clays of low to medium plasticity, gravelly clays, sandy clays, silty clays, lean clays		
			OL	Organic silts and organic silty clays of low plasticity		
	Silts and clays (Liquid limit greater than 50)		MH	Inorganic silts, micaceous or diatomaceous fine sandy or silty soils, elastic silts		
			CH	Inorganic clays of high plasticity, fat clays		
			OH	Organic clays of medium to high plasticity, organic silts		
	High! organic soils		Pt	Peat and other highly organic soil		

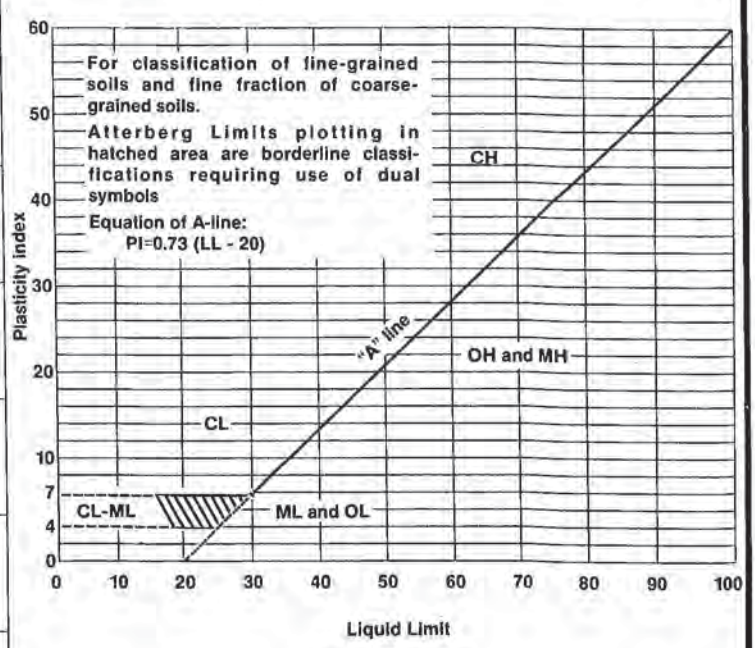

Plasticity Chart

SPECIAL NOTES ON PLACEMENT OF COMPACTED FILL SOIL

GENERAL

The placement of compacted fill for support of foundations, floor slabs, pavements, or earth structures should be carried out by an experienced excavator with the proper equipment. The excavator must be prepared to adapt his procedures, equipment, and materials to the type of project, to weather conditions, and the structural requirements of the architect and engineer. Methods and materials used in summer may not be applicable in winter; fill used in dry excavations may not be suitable in wet excavations or during periods of precipitation; proposed fill soil may require wetting or drying for proper placement and compaction. Conditions may also vary during the course of a project or in different areas of the site. These needs should be addressed in the project drawings and specifications.

EXCAVATION/BACKFILL BELOW THE WATER TABLE

It is common to have to excavate and replace unsuitable soils below the water table for site correction. As a general rule of prudent construction technique, we recommend that excavation/backfill below the water table not be permitted, unless the excavation is dewatered. Numerous problems can develop when this procedure is attempted without dewatering.

- Inability of the equipment operators and soil technicians to observe that all unsuitable soil/materials have been removed from the base of the excavation.
- Inability to observe and measure that proper lateral oversizing is provided.
- Inability to prevent or correct sloughing of excavation sidewalls, which can result in unsuitable soils trapped within the select backfill.
- Inability of the contractor to adequately and uniformly compact the backfill.
- Possibility of disturbance of the suitable soils at the base of the excavation.

The dewatering methods, normally chosen at the contractor's option, should follow prudent construction practice. Excavations in clay can often be dewatered with sump pits and pumps; this technique would not be applicable for excavation extending into permeable granular soil, especially for depths significantly below the water table. Dewatering granular soils should normally be done with well points or wells. When dewatering is needed, we strongly recommend that the procedures be discussed at pre-bid or pre-construction meetings. The dewatering technique chosen by the contractor should be reviewed by the architect and engineer **before** construction starts; it should not be left until excavation is under way.

The selection of proper backfill materials is important when working in dewatered excavations. Even with dewatering, the base is usually wet and the contractor must be careful not to disturb the base. We recommend that the first lifts of backfill be a clean medium to course grain sand with less than 5% passing the #200 sieve. The use of silty sand, clayey sand, or cohesive/semi-cohesive soils is not recommended for such situations. The excavator should be required to submit samples of the proposed material(s) he plans to use as backfill **before** the fill is hauled to the site, so that it can be tested for suitability.

WINTER EARTHWORK CONSTRUCTION

Winter earthwork presents its own range of problems which must be overcome; the situation may be complicated by the need for dewatering discussed above.

During freezing conditions, the fill used must **not** be frozen when delivered to the site. It also must not be allowed to freeze during or after compaction. Since the ability to work the soil while keeping it from freezing depends in part on the soil type, the specifications should require the contractor to submit a sample of his proposed fill before construction starts, for laboratory testing. If the soil engineer and structural engineer determine that it is not suitable, it should be rejected. In general, silty sand, clayey sand, and cohesive/semi-cohesive soils should not be used as fill under freezing conditions. All frozen soil of any type should be rejected for use as compacted fill.

It is important that compacted fill be protected from freezing after it is placed. The excavator should be required to submit a plan for protecting the soil. The plan should include details on the type and amount of material (straw, blankets, extra loose fill, topsoil, etc.) proposed for use as frost protection. The need to protect the soil from freezing is ongoing throughout construction and applies both before **and** after concrete is placed, until backfilling for final frost protection is completed. Foundations placed on frozen soil can experience heaving and significant settlement, rotation, or other movement as the soil thaws. Such movement can also occur if the soil is allowed to freeze **after** the concrete is placed and then allowed to thaw. The higher the percentage of fines (clay and silt, P-200 material) in the fill, the more critical is the need for protection from freezing.

MOISTURE CONTROL OF FILL

The contractor should be required to adjust the moisture content of the soil to within a narrow range near the optimum moisture content (as defined by the applicable Proctor or AASHTO Test). In general, fill should be placed within about 2% of optimum. The need for moisture control is more critical as the percentage of fines increases. Naturally-occurring clayey sand or cohesive/semi-cohesive soil are often much wetter than the optimum. Placing and attempting to compact such soils to the specified density may be difficult, or not possible. Even if compacted to the specified density, excessively wet soils may not be suitable as floor slab or pavement subgrades due to pumping under applied load. This is especially true when wet cohesive/semi-cohesive soil is used as backfill in utility trenches under streets. Excessively wet soil in thick fill sections may cause post-construction settlement beyond that estimated for fill placed at or near (±2%) the optimum moisture content.

An exception to this would be low permeability soil placed as a pond liner or for a dam. Such soil should usually be placed at 2% to 4% above the optimum moisture content, to provide for a lower insitu permeability. Also, shrinking/swelling soils (expansive clay) should be placed at about 2% to 4% above optimum moisture to reduce the possibility of soil expansion. Clayey silt, silt, or very silty fine sand should be placed excessively dry. Such soils can undergo post-construction consolidation upon being wetted, even if the specified density had been achieved. This is caused by the collapse of flocculant soil particle arrangement, and can result in settlement of buildings or slabs constructed over the soil.

Proper control of fill soil moisture is the responsibility of the excavator. The excavator should evaluate the need for wetting or drying the soils, based either on the data in the soil report, or his own site testing. If the excavator is bringing in off-site fill, it is also his responsibility to evaluate the moisture content of the soil, and the need for wetting or drying. We recommend that this matter be addressed in the project specifications.

CONSTRUCTION ON COMPACTED SOIL

After the select fill has been placed, compacted, and tested, it must be maintained and protected in order to properly support structures. The suitability of compacted fill soil can be greatly diminished if it is allowed to freeze, become saturated while unconfined (such as in footing excavations or at the surface of slab/placement subgrade), or disturbed by construction equipment.

The responsibility for protecting the soil, or for correcting any disturbance, should be clearly defined in the specifications. Soils which become wet and soft after compaction testing do not necessarily reflect inaccurate field density tests. Especially with non-expansive cohesive/semi-cohesive soils, saturation when unconfined can severely reduce the **shear strength** while the density remains adequate. The reduced shear strength can cause footings, floor slabs, or pavements to settle or fail under load. We strongly recommend that all pavement subgrade be test rolled (MN/DOT Specification 2111) immediately before paving to determine if the subgrade has not been protected and soft spots have developed.

FLOOR SLAB SUBGRADE AND UTILITY TRENCHES

This facet of construction presents special problems, especially if the slab subgrade is allowed to freeze. When the soil thaws, it undergoes a period of temporarily lower shear strength. Floor slabs should **not** be cast over soil in such a weakened or frozen condition (reference pertinent PCA and ACI publications). To do so can result in cracked and failing slabs. The time period to heat and thaw a building may place the construction schedule and/or costs in jeopardy. We strongly recommend that this matter be reviewed in pre-bid and pre-construction meetings.

Backfilling of utility trenches in the floor slab subgrade can be difficult. If the soil is wet, compaction to the specified density may be difficult, or not possible. The narrowly cut trenches may preclude the use of proper compaction equipment. With the use of small equipment in confined areas, the contractor must place the soil in thin lifts (4 to 6 inches), with the soil at the proper moisture content. This work is typically carried out by contractors other than the mass grading or earthwork contractor. We strongly recommend that the responsibility to carry out the compaction be clearly detailed in the applicable section of the specifications, and reviewed with the appropriate contractor and subcontractor.

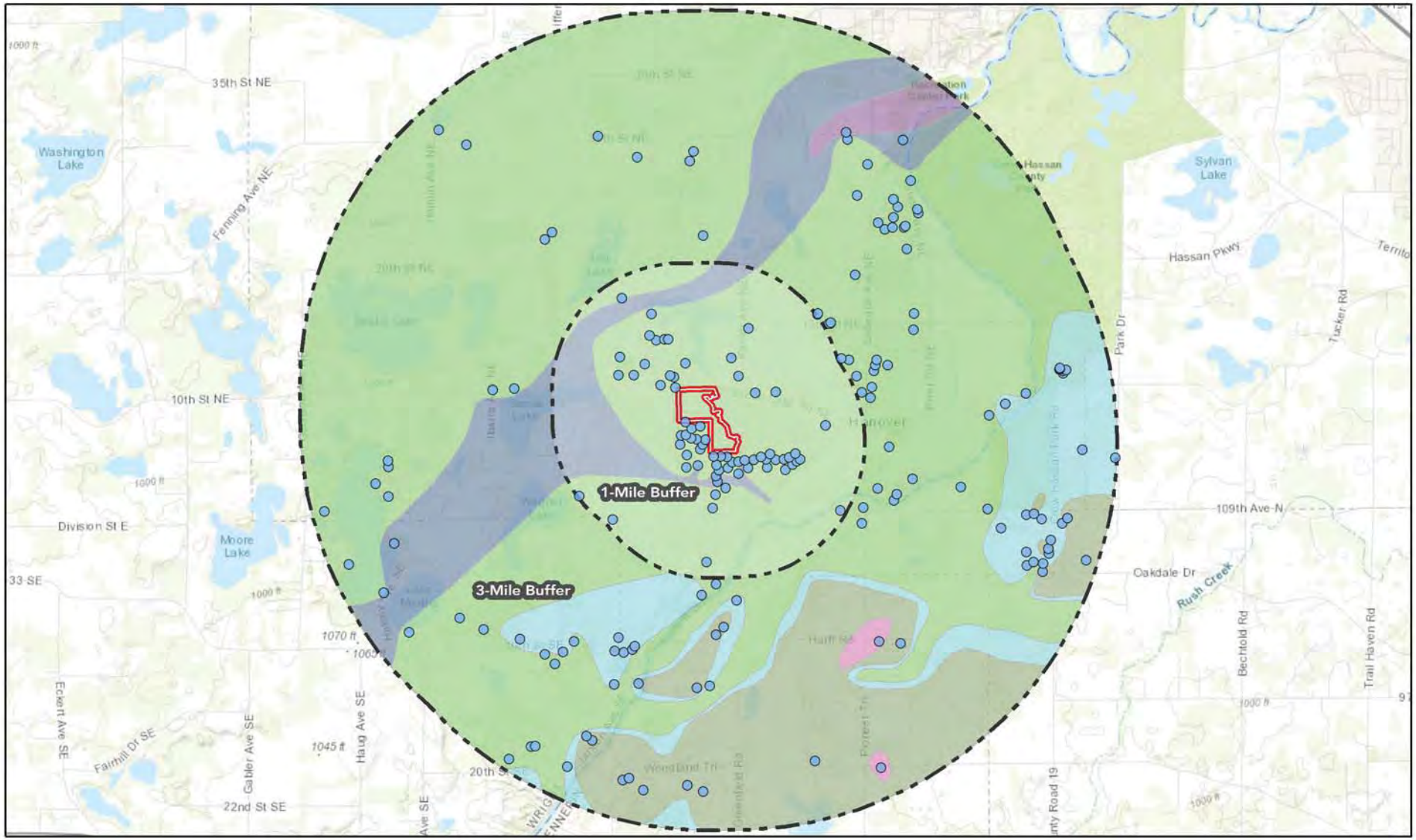

This map was created using Loucks Geographic Information Systems (GIS), it is a compilation of information and data from various sources. This map is not a surveyed or legally recorded map and is intended to be used as a reference. Tom Loucks, Inc. is not responsible for any inaccuracies contained herein.

LOUCKS

Legend

Project Boundary

Wells (Average Bedrock Depth = 150 Ft.)

Bedrock Geology

- Eau Claire Formation
- Jordan Sandstone
- St. Lawrence Formation
- St. Peter Sandstone
- Tunnel City Group
- Wonewoc Sandstone

N

0 6,000

Scale In Feet

Crow River Heights

Hanover, MN

Geology

Exhibit

ATTACHMENT 7

United States Department of Agriculture

Natural Resources Conservation Service

A product of the National Cooperative Soil Survey, a joint effort of the United States Department of Agriculture and other Federal agencies, State agencies including the Agricultural Experiment Stations, and local participants

Custom Soil Resource Report for Wright County, Minnesota

ATTACHMENT 8

January 29, 2018

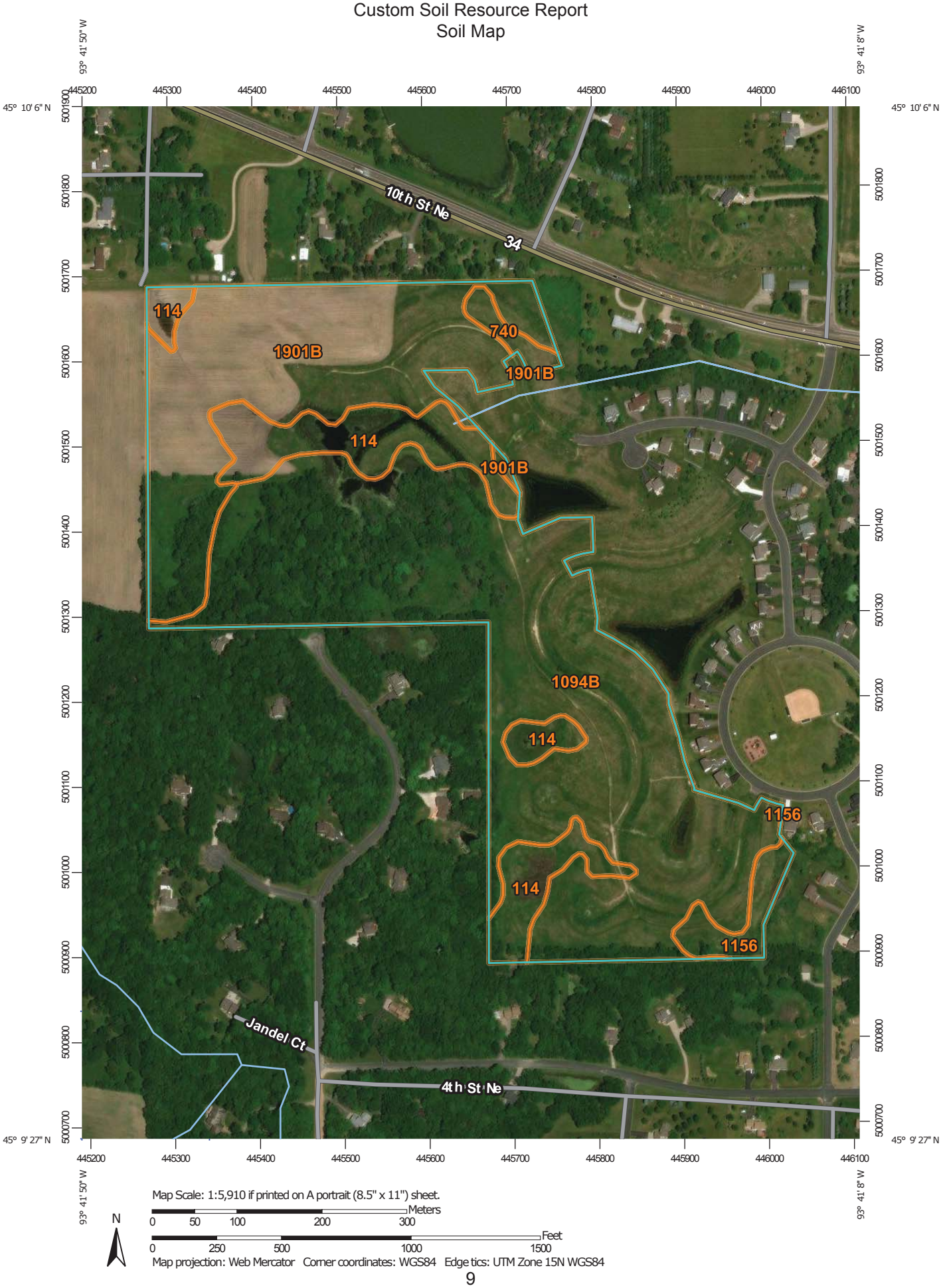

Map Scale: 1:5,910 if printed on A portrait (8.5" x 11") sheet.

N

Meters: 0 50 100 200 300

Feet: 0 250 500 1000 1500

Map projection: Web Mercator Corner coordinates: WGS84 Edge tics: UTM Zone 15N WGS84

Map Unit Legend

Map Unit Symbol	Map Unit Name	Acres in AOI	Percent of AOI
114	Glencoe clay loam, 0 to 1 percent slopes	9.4	13.0%
740	Hamel-Glencoe complex, 0 to 2 percent slopes	0.9	1.2%
1094B	Angus-Cordova complex, 0 to 5 percent slopes	40.0	55.8%
1156	Cordova loam, 0 to 2 percent slopes	1.8	2.5%
1901B	Angus-Le Sueur complex, 1 to 5 percent slopes	19.7	27.4%
Totals for Area of Interest		**71.7**	**100.0%**

Map Unit Descriptions

The map units delineated on the detailed soil maps in a soil survey represent the soils or miscellaneous areas in the survey area. The map unit descriptions, along with the maps, can be used to determine the composition and properties of a unit.

A map unit delineation on a soil map represents an area dominated by one or more major kinds of soil or miscellaneous areas. A map unit is identified and named according to the taxonomic classification of the dominant soils. Within a taxonomic class there are precisely defined limits for the properties of the soils. On the landscape, however, the soils are natural phenomena, and they have the characteristic variability of all natural phenomena. Thus, the range of some observed properties may extend beyond the limits defined for a taxonomic class. Areas of soils of a single taxonomic class rarely, if ever, can be mapped without including areas of other taxonomic classes. Consequently, every map unit is made up of the soils or miscellaneous areas for which it is named and some minor components that belong to taxonomic classes other than those of the major soils.

Most minor soils have properties similar to those of the dominant soil or soils in the map unit, and thus they do not affect use and management. These are called noncontrasting, or similar, components. They may or may not be mentioned in a particular map unit description. Other minor components, however, have properties and behavioral characteristics divergent enough to affect use or to require different management. These are called contrasting, or dissimilar, components. They generally are in small areas and could not be mapped separately because of the scale used. Some small areas of strongly contrasting soils or miscellaneous areas are identified by a special symbol on the maps. If included in the database for a given area, the contrasting minor components are identified in the map unit descriptions along with some characteristics of each. A few areas of minor components may not have been observed, and consequently they are not mentioned in the descriptions, especially where the pattern was so complex that it was impractical to make enough observations to identify all the soils and miscellaneous areas on the landscape.

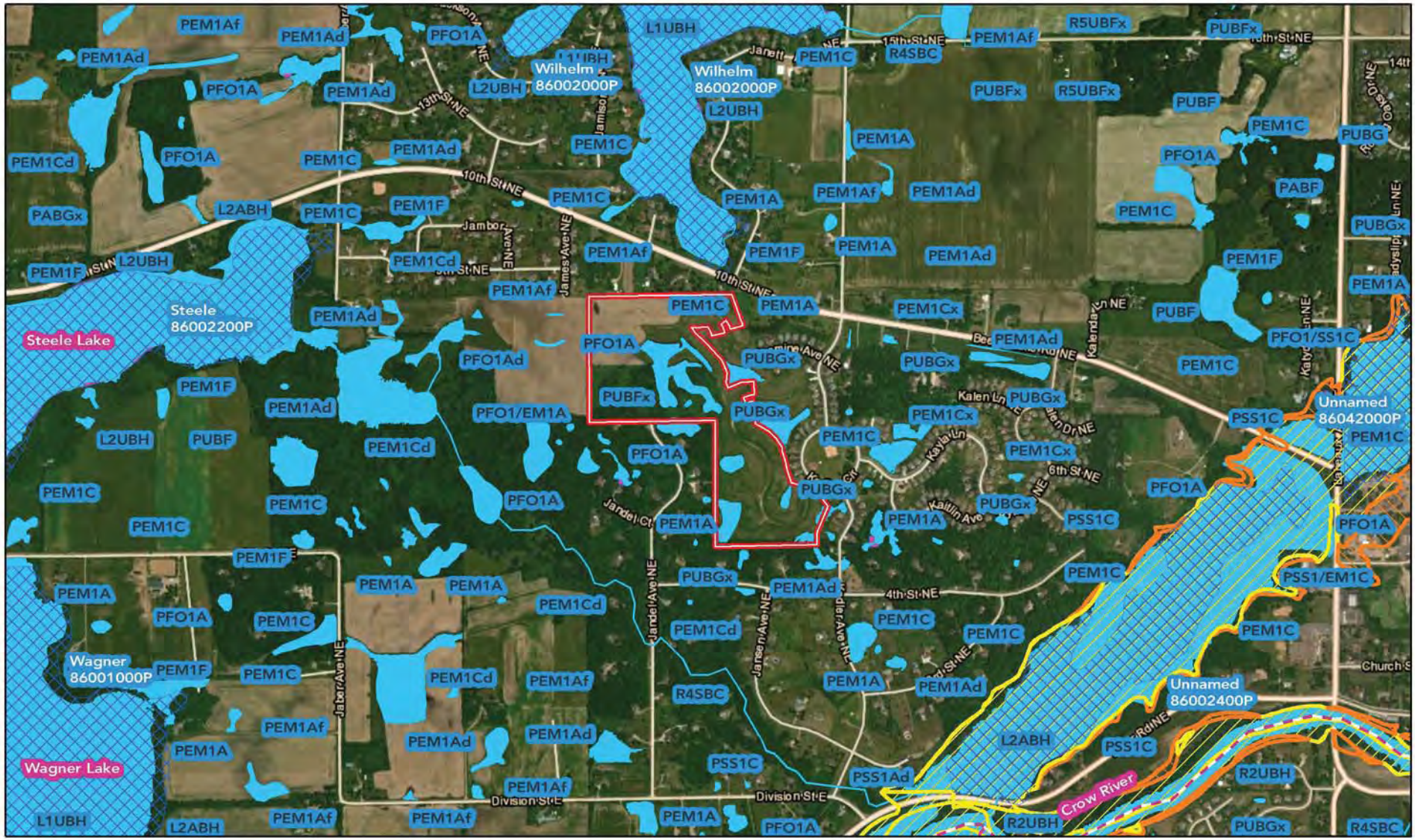

This map was created using Loucks Geographic Information Systems (GIS), it is a compilation of information and data from various sources. This map is not a surveyed or legally recorded map and is intended to be used as a reference. Tom Loucks, Inc. is not responsible for any inaccuracies contained herein.

LOUCKS

Legend

- Project Boundary
- MN DNR PWI Watercourse
- MN DNR PWI Waterbody
- NHD Waterbody
- 100 yr. Flood
- 500 yr. Flood
- NWI Wetland

N

0 1,500

Scale In Feet

Crow River Heights

Hanover, MN

Water Resources

Exhibit 5

ATTACHMENT 9

Crow River Heights West Site

Hanover, Wright County, Minnesota

Wetland Delineation Report

Prepared for

Dennis Backes, Backes Companies, Inc

by

Kjolhaug Environmental Services Company, Inc.
(KES Project No. 2017-052)

October 2, 2017

ATTACHMENT 10

Crow River Heights West Site

Hanover, Wright County, Minnesota

Wetland Delineation Report

TABLE OF CONTENTS

Title Page

1. WETLAND DELINEATION SUMMARY 1
2. OVERVIEW 2
3. METHODS 2
3.1 Wetland Delineation 2
3.2 Aerial Review for Offsite Hydrology Determinations 3
4. RESULTS 4
4.1 Review of NWI, Soils, Public Waters and NHD Information 4
4.2 Wetland Determinations and Delineations 5
4.3 Other Areas 7
4.4 Aerial Review for Offsite Hydrology Determinations 7
4.5 Request for Wetland Boundary and Jurisdictional Determination 7
5. CERTIFICATION OF DELINEATION 8

TABLES

Table 1. Aerial Photograph Interpretation Codes
Table 2. Soils Mapped on the Crow River Heights West Site
Table 3. Wetland Description Table
Table 4. Offsite Hydrology Determinations

FIGURES

1. Site Location
2. Existing Conditions
3. National Wetlands Inventory
4. Soil Survey
5. DNR Public Waters Inventory
6. National Hydrography Dataset
7. Offsite Hydrology Assessment Areas

APPENDICES

A. Joint Application Form for Activities Affecting Water Resources in Minnesota
B. Wetland Boundary Survey
C. Precipitation Data & Supporting Information
D. Wetland Delineation Data Forms
E. No-Loss Information
F. Aerial Review for Offsite Hydrology Assessment

Crow River Heights West Site

Hanover, Wright County, Minnesota

Wetland Delineation Report

1. WETLAND DELINEATION SUMMARY

- The 70.5-acre Crow River Heights West Site was inspected on May 3, 2017 for the presence and extent of wetland.
- The National Wetlands Inventory (NWI) map showed nine wetlands present within the property boundary.
- The soil survey showed Angus-Cordova Complex (Partially Hydric) and Glencoe Clay Loam (Hydric) as the main Hydric Soil types mapped on the property.
- The DNR Public Waters Inventory showed one DNR Public Water (Wilhelm Lake 86-20 P) located approximately 250' north of the site boundary.
- The National Hydrography Dataset showed one Lake/Pond water feature present at the location of Wilhelm Lake, as well as two smaller Lake/Pond water features to the southeast and west of the site.
- Twelve wetlands were delineated within the site boundary and are summarized in Table 3 in Section 4.2.

2. OVERVIEW

The 70.5-acre Crow River Heights West Site was inspected on May 3, 2017 for the presence and extent of wetland. The property was located in Section 34, Township 120N, Range 24W, Hanover, Wright County, Minnesota. The review area was situated west of Labeaux Ave NE and south of Beebe Lake Road NE (**Figure 1**). The property corresponded to Wright County PID#: **108500341102.**

The northwestern portion of the site consisted of annually-tilled cropland that had not been tilled at the time of the field visit. An area of woodland was present on the western portion of the property that was dominated by hardwood tree species including basswood, sugar maple, and oak trees. The topography sloped from an elevation of 992 ft MSL in the northwestern portion of the site down to a low of 960 ft MSL in the southeastern portion of the site. The site had been previously graded for a housing development, but the project was never completed. The site contains numerous excavated road beds, as well as storm ponds that lacked installed outlets. Surrounding land use consisted of single-family housing developments, and farm land.

Twelve wetlands were delineated within the site boundary. The delineated wetland boundaries and existing conditions are shown on **Figure 2**.

Appendix A of this report includes a Joint Application Form for Activities Affecting Water Resources in Minnesota, which is submitted in request for: (1) a wetland boundary and type determination under the Minnesota Wetland Conservation Act (WCA), and (2) delineation concurrence and an Approved Jurisdictional Determination (AJD).

3. METHODS

3.1 Wetland Delineation

Wetlands were identified using the Routine Determination method described in the Corps of Engineers Wetlands Delineation Manual (Waterways Experiment Station, 1987) and the Regional Supplement to the Corps of Engineers Wetland Delineation Manual: Midwest Region (Version 2.0) as required under Section 404 of the Clean Water Act and the Minnesota Wetland Conservation Act.

Wetland boundaries were identified as the upper-most extent of wetland that met criteria for hydric soils, hydrophytic vegetation, and wetland hydrology. Wetland-upland boundaries were marked with pin flags that were located by land surveyors from Loucks, Inc. A copy of the survey has been included as **Appendix B**.

Soils, vegetation, and hydrology were documented at a representative location along the wetland-upland boundary. Plant species dominance was estimated based on the percent aerial or basal coverage visually estimated within a 30-foot radius for trees and vines, a 15-foot radius for the shrub layer, and a 5-foot radius for the herbaceous layer within the community type sampled.

Soils were characterized to a minimum depth of 24 inches (unless otherwise noted) using a Munsell Soil Color Book and standard soil texturing methodology. Hydric soil indicators used are from Field Indicators of Hydric Soils in the United States (USDA Natural Resources Conservation Service (NRCS) in cooperation with the National Technical Committee for Hydric Soils, Version 7, 2010).

Mapped soils are separated into five classes based on the composition of hydric components and the Hydric Rating by Map Unit color classes utilized on Web Soil Survey. The five classes include Hydric (100 percent hydric components), Predominantly Hydric (66 to 99 percent hydric components), Partially Hydric (33 to 65 percent hydric components), Predominantly Non-Hydric (1 to 32 percent hydric components), and Non-Hydric (less than one percent hydric components).

Plants were identified using standard regional plant keys. Taxonomy and indicator status of plant species was taken from the 2017 National Wetland Plant List (U.S. Army Corps of Engineers 2017. National Wetland Plant List, version 3.3, Engineer Research and Development Center, Cold Regions Research and Engineering Laboratory, Hanover, NH).

3.2 Aerial Review for Offsite Hydrology Determinations

Areas in agricultural cropland that exhibited potential wetland signatures on aerial photography and with low or depressional topography were reviewed generally following methods described in Using Aerial Imagery to Assess Wetland Hydrology (Minnesota Board of Water and Soil Resources (BWSR) 2010) and Guidance for Submittal of Delineation Reports to the St. Paul District Corps of Engineers and Wetland Conservation Act Local Governmental Units in Minnesota, Version 2.0 (USACE 2015). These methods use aerial photography and antecedent precipitation conditions to identify areas that have wetland hydrology signatures during periods of typical precipitation.

Available years of Farm Service Agency (FSA) aerial photography were reviewed for the site to determine long-term hydrology. In cases where additional aerial photography was relevant, available, and necessary to make hydrology determinations, we reviewed aerial photography from other sources such as the Minnesota Geospatial Information Office (MnGEO) and Google Earth.

Signatures at locations of potential wetlands on aerial photographs were interpreted and classified using seven codes (**Table 1**). Wetland hydrology was assumed to be present within areas exhibiting wetland signatures in more than 50% of years with normal climatic conditions based on antecedent precipitation.

Table 1. Aerial photograph interpretation codes

Code	Classification
CS	Crop stress
DO	Drowned out
NC	Not cropped
SW	Standing water
WS	Wetland signature
AP	Altered pattern
NV	Normal vegetation

This analysis used only aerial photographs taken following periods of precipitation within the normal range as determined using the Wetland Delineation Precipitation Data Retrieval tool (Minnesota Climatology Office 2015). This tool classifies antecedent precipitation as Normal (N), Wet (W) or Dry (D) by comparing precipitation during the three months preceding the estimated date of aerial photography to the 30-year average from 1981-2010. July 1 was used as the estimated date of FSA aerial photography.

4. RESULTS

4.1 Review of NWI, Soils, Public Waters and NHD Information

The National Wetlands Inventory (NWI) (Minnesota Geospatial Commons 2009-2014 and U.S. Fish and Wildlife Service) showed nine wetlands present within the property boundaries (**Figure 3**).

The Soil Survey (USDA NRCS 2015) showed Angus-Cordova Complex (Partially Hydric) and Glencoe Clay Loam (Hydric) as the main Hydric Soil types mapped on the property. Soil types mapped on the property are listed in **Table 2** and a map showing soil types is included in **Figure 4**. The Hydric Soil Lists – All Components table is included in **Appendix C**.

Table 2. Soil types mapped on the Crow River Heights West Site

Symbol	Soil Name	Acres	% of Area	Hydric Category
1094B	Angus-Cordova	40.9	58.0	Partially Hydric
1901B	Angus-Le Sueur	18.1	25.7	Predominantly Non-Hydric
114	Glencoe	9.2	13.0	Hydric
1156	Cordova	1.8	2.5	Predominantly Hydric
740	Hamel-Glencoe	0.6	0.8	Predominantly Hydric

The Minnesota DNR Public Waters Inventory (Minnesota Department of Natural Resources 2015) showed one DNR Public Water (Wilhelm Lake 86-20 P) located approximately 250’ north of the site (**Figure 5**).

The National Hydrography Dataset (U.S. Geological Survey 2015) showed one Lake/Pond water feature present at the location of Wilhelm Lake, as well as two smaller Lake/Pond water features to the southeast and west of the site (**Figure 6**).

4.2 Wetland Descriptions and No-Loss Discussion

Potential wetlands were evaluated during field observations on May 3, 2017. Twelve wetlands were identified and delineated on the property (**Figure 2**), and are described below in **Table 3**. Corresponding data forms are included in **Appendix D**. The following descriptions of the wetlands and adjacent uplands reflects conditions observed at the time of the field visit. Herbaceous vegetation was actively growing at the time of the wetland delineation. The agricultural fields had not yet been tilled at the time of the field visit. Precipitation conditions were typical based on the Precipitation Worksheet Using Gridded Database method, and wetter than the normal range based on available 30-day rolling total precipitation (**Appendix C**).

Table 3. Delineated Wetland Descriptions - Crow River Heights West site

Wetland ID	Wetland Area (acres)	Circular 39	Cowardin	Eggers and Reed	Dominant Vegetation	Adjacent Upland Vegetation	Observed Drainage Features	Observed Hydrology Indicat.	Mapped NWI Wetland	Mapped Soil Series
1	0.29	1	PFO1A	Forested, seasonally flooded basin	Green ash and silver maple trees, reed canary grass	White oak, red oak and ironwood trees, geranium, Pennsylvania sedge, Virginia waterleaf, gooseberry, prickly ash, wood anemone, violet	Wetland 1 extends offsite to the south.	Center of wetland inundated with approximately 6-12" of surface water.	PEM1C/PEM1A	Angus-Cordova Complex
2	8.34	1/2/3/5	PFO1A/PEM1A/PEM1B/PEM1Cx/PUBFx	Partially forested seasonally flooded basin/fresh wet meadow/shallow marsh/open water	Green ash trees, reed canary grass, hummock sedge, cattail, green bulrush, scattered willow trees, open water, duckweed	Red oak, white oak and green ash trees, prickly ash, cherry and buckthorn shrubs, woodland strawberry, smooth brome, dandelion, common milkweed, common violet	Wetland 4 drains towards Wetland 1 through a shallow erosional drainage feature. Wetland 2 extends slightly offsite to the south.	The Type 5 portion of the wetland was inundated with at least 3' of water. The rest of the wetland was inundated with 6-12" of water with a saturated fringe.	PEM1C/PUBFx/ PFO1A/PEM1A	Angus-Cordova Complex, Glencoe Clay Loam
3	0.15	1	PFO1A	Forested, seasonally flooded basin	Green ash trees, common buckthorn, Virginia waterleaf, geranium, sedge species	White oak, red oak and ironwood trees, geranium, Pennsylvania sedge, Virginia waterleaf, gooseberry, prickly ash	Wetland 3 appeared to surface flow to Wetland 5.	Center of wetland inundated with approximately 6" of surface water.	N/A	Angus-Cordova Complex
4	0.42	2	PEM1Bf	Fresh wet meadow	Smartweed, sedge species, beggarstick, reed canary grass	Farmed area lacking vegetation, had not been tilled at the time of the field visit. Scattered dandelion and horseweed present.	Wetland 4 flowed to Wetland 2 through a shallow erosional drainage feature.	Center of wetland inundated with approximately 6" of surface water.	N/A	Glencoe Clay Loam
5	0.03	1	PFO1A	Forested, seasonally flooded basin	Elm, ironwood and red maple trees	White oak, red oak and ironwood trees, geranium, Pennsylvania sedge, Virginia waterleaf, gooseberry, prickly ash	Wetland 5 appeared to surface flow to Wetland 7 and Wetland 2	Center of wetland inundated with approximately 6" of surface water.	N/A	Angus-Cordova Complex
6	1.47	2/3	PEM1B/C	Fresh wet meadow/shallow marsh	Cattail, reed canary grass	Smooth brome, Kentucky bluegrass, reed canary grass, Canada goldenrod	Wetland 6 extended offsite to the south and east.	Center of wetland inundated with 6-12" of surface water with a saturated fringe.	PUBFx/PEM1Ad	Cordova
7	0.03	1	PEM1A	Seasonally flooded basin	Sparsely vegetated with geranium and giant goldenrod	White oak, red oak and ironwood trees, geranium, Pennsylvania sedge, Virginia waterleaf, gooseberry, prickly ash	Wetland 7 recieves surface flow from Wetland 5.	Center of wetland inundated with approximately 6" of surface water. Water was perched, sample borehole lacked saturation or inundation.	N/A	Angus-Cordova Complex
8	0.06	1	PEM1A	Seasonally flooded basin	Reed canary grass, Kentucky bluegrass, sedge species, willow shrubs	Kentucky bluegrass, Canada goldenrod, smooth brome	Isolated depression	Center of wetland inundated with approximately 6" of surface water.	N/A	Angus-Cordova Complex, Glencoe Clay Loam
9	0.07	1	PEM1A	Seasonally flooded basin	Kentucky bluegrass, giant goldenrod, Virginia waterleaf	Ironwood, red oak, red cedar and white oak trees, Virginia waterleaf, prickly ash and buckthorn shrubs	Wetland 9 appeared to surface flow to Wetland 3.	Center of wetland inundated with approximately 6" of surface water.	N/A	Angus-Le Sueur Complex
10	0.15	1	PEM1A	Seasonally flooded basin	Reed canary grass, Kentucky bluegrass, sedge species, willow shrubs	Kentucky bluegrass, Canada goldenrod, smooth brome	Isolated depression	Saturated at surface.	N/A	Angus-Le Sueur Complex
11	1.19	2/3	PEM1B/C	Fresh wet meadow/shallow marsh	Cattail, reed canary grass, scattered green ash trees and shrubs	Kentucky bluegrass, smooth brome, scattered prickly ash, red cedar, and green ash seedlings	Wetland 11 extends offsite to the west.	Center of wetland inundated with 6-12" of surface water with a saturated fringe.	PEM1C/PEM1A	Glencoe Clay Loam
12	1.60	2/3	PEM1B/C	Fresh wet meadow/shallow marsh	Cattail, lake sedge, reed canary grass	Kentucky bluegrass, Canada goldenrod, Canada thistle	Wetland 12 extended slightly offsite to the west and south. A shallow excavated channel on the western side of Wetland 12 flow into the wetland.	Center of wetland inundated with 6-12" of surface water with a saturated fringe.	PEM1Cd/ PEM1A	Glencoe Clay Loam

No-Loss Discussion

The Crow River Heights West site had been previously graded at some point between 2006-2008 for a housing development. The project was never finished due to the recession and subsequent economic turbulence during 2008. Since 2008 the site has remained undeveloped, with excavated road beds onsite taking on wetland characteristics, and with storm water ponds that lack constructed outlets filling up with water. Kjolhaug Environmental Services had delineated this property prior to the 2008 construction. The comparison of the wetland boundaries prior to, and post-construction have been included in **Appendix E**, as well as a copy of the survey showing the previously delineated wetland boundaries. The wetland areas onsite that have been incidentally created as a result of the grading are not regulated as wetlands under the Minnesota Wetland Conservation Act. As stated in the Attachment B of the Joint Application Form, we are requesting a No-Loss Determination for the incidental wetlands onsite under WCA (WCA 8420.0105 Subp. 2D.). Specifically, Wetlands 2 and 11 have increased in size considerably since the time of the grading activities. We are requesting a No-Loss for the additional wetland areas within Wetland 2 and Wetland 11, as shown on the figures included in **Appendix E**.

Wetland 2 consisted of a Type 1/2/3/5 PFO1A/PEM1A/PEM1B/PEM1Cx/PUBFx wetland located on the northern portion of the site. The eastern portion of Wetland 2 had previously been excavated to be a road bed, which has since developed into Type 3 wetland dominated by cattails, and containing approximately 6-12” of standing water. The western portion of the wetland had been excavated into a storm pond, which is now Type 5 wetland containing approximately 3’ of standing water. When the site had been graded initially, a berm was created along the eastern side of Wetland 2. The berm impounds water in this area, further expanding the size of Wetland 2. The storm water pond that was created within Wetland 2 also lacks an outlet.

Wetland 11 consisted of a Type 2/3 PEM1B/1C wetland located on the central portion of the site. The wetland has expanded since the time of the previous delineation into the adjacent graded area. This area has since taken on wetland characteristics, but is incidentally created and therefore should not be regulated under WCA.

4.3 Other Areas

Other areas were investigated because they were: (1) observed to support a hydrophytic plant community, (2) had visible wetland hydrology indicators, (3) were shown as wetland on the NWI map, or (4) were depressional and mapped as hydric soil. Field investigation led to the conclusion that these areas were not wetland.

Sample Point A was taken within an excavated road bed on the southeastern portion of the site that contained standing water at the time of the field visit. This area was not shown as a wetland on the NWI map, and fell in an area mapped as Angus-Cordova complex (Partially Hydric) on the soil survey. This area did not meet any hydric soil indicators, and was therefore determined to be upland.

Two storm water ponds were located on the eastern portion of the site. Both ponds were shown as PUBGx wetlands on the NWI map, and fell in areas mapped as Angus-Cordova complex (Partially Hydric) on the soil survey. The storm ponds were excavated in an area that was historically upland, and were therefore not delineated as wetland.

No other areas with hydrophytic vegetation or wetland hydrology were observed on the site. No other areas were shown as hydric soil on the soil survey or as wetland on the NWI map.

4.4 Aerial Review for Offsite Hydrology Determinations

Aerial photography was reviewed for 30 years between 1979 and 2016. Years 1979-2000, 2003, 2006, 2008, 2009, 2010, 2013, 2015, and 2016 were assessed for wet/normal/dry climatic conditions using the Wetland Delineation Precipitation Data Retrieval tool and an estimated photo date of July 1 for the FSA aerials. Fifteen years (1980-1983, 1986, 1989, 1994-1996, 1998-2000, 2008, 2015 and 2016) were determined have precipitation in the normal range during the three months preceding the estimated photo dates. Areas showing at least one wetland signature during a year with wetter than normal precipitation conditions were included in the aerial review. The results are summarized in **Table 4** and review areas are shown on **Figure 7**. Aerial photographs showing review areas and interpretations are included in **Appendix F**.

One Area (Area A) exhibited potential wetland signatures, was located in agricultural cropland, and was reviewed according to the BWSR (2010) protocol. Areas exhibiting wetland signatures in more than 50% of the years with precipitation in the normal range are generally assumed to meet wetland hydrology criteria. Areas exhibiting wetland signatures in 30% to 50% of the years with precipitation in the normal range were also reviewed in the field (**Table 4, Figures 7 and 7A**).

Table 4. Offsite hydrology determinations

Area	No. of Photo Years w/ Normal Precipitation	No. of Normal Precipitation Years w/ Wetland Signatures	% of Normal Precipitation Years w/ Wetland Signatures	Hydrology Determination
A	15	10	67%	Hydrology Present

Areas A showed wetland signatures in 67% of years with normal precipitation conditions. This area corresponded to Wetland 4, and is described above in Table 3 (Delineated Wetland Descriptions).

4.5 Request for Wetland Boundary and Jurisdictional Determination

Appendix A of this report includes a Joint Application Form for Activities Affecting Water Resources in Minnesota, which is submitted in request for: (1) a wetland boundary and type determination under the Minnesota Wetland Conservation Act (WCA), and (2) delineation concurrence and an Approved Jurisdictional Determination (AJD) under Section 404 of the Federal Clean Water Act.

5. CERTIFICATION OF DELINEATION

The procedures utilized in the described delineation are based on the U.S. Army Corps of Engineers 1987 Wetlands Delineation Manual as required under Section 404 of the Clean Water Act and the Minnesota Wetland Conservation Act. This wetland delineation and report were prepared in compliance with the regulatory standards in place at the time the work was performed.

Site boundaries indicated on figures within this report are approximate and do not constitute an official survey product.

Delineation completed by: Adam Cameron, Wetland Ecologist/GIS Specialist
MN Certified Wetland Delineator In-Training No. 5221

Ben Carlson, Wetland Specialist
MN Certified Wetland Delineator No. 1125

Andrew Krinke, Ecologist/GIS Specialist
MN Certified Wetland Delineator In-Training No. 5197

Report prepared by: Adam Cameron, Wetland Ecologist/GIS Specialist
MN Certified Wetland Delineator In-Training No. 5221

Report reviewed by: _____ Date: October 3, 2017
Mark Kjolhaug, Professional Wetland Scientist No. 000845

Crow River Heights West Site

Wetland Delineation Report

FIGURES

1. Site Location
2. Existing Conditions
3. National Wetlands Inventory
4. Soil Survey
5. DNR Protected Waters Inventory
6. National Hydrography Dataset
7. Offsite Hydrology Assessment Areas

7A. Offsite Hydrology Assessment Areas

Figure 1 - Site Location

N

0 1,500 Feet

KJOLHAUG ENVIRONMENTAL SERVICES COMPANY

Source: ESRI Streets Basemap

Crow River Heights West (KES 2017-052)
Hanover, Minnesota

Note: Boundaries indicated on this figure are approximate and do not constitute an official survey product.

Figure 2 - Existing Conditions (2017 KES Drone Photo)

N

0 400 Feet

KJOLHAUG ENVIRONMENTAL SERVICES COMPANY

Source: MnGeo, ESRI Imagery Basemap

Crow River Heights West (KES 2017-052)
Hanover, Minnesota

Note: Boundaries indicated on this figure are approximate and do not constitute an official survey product.

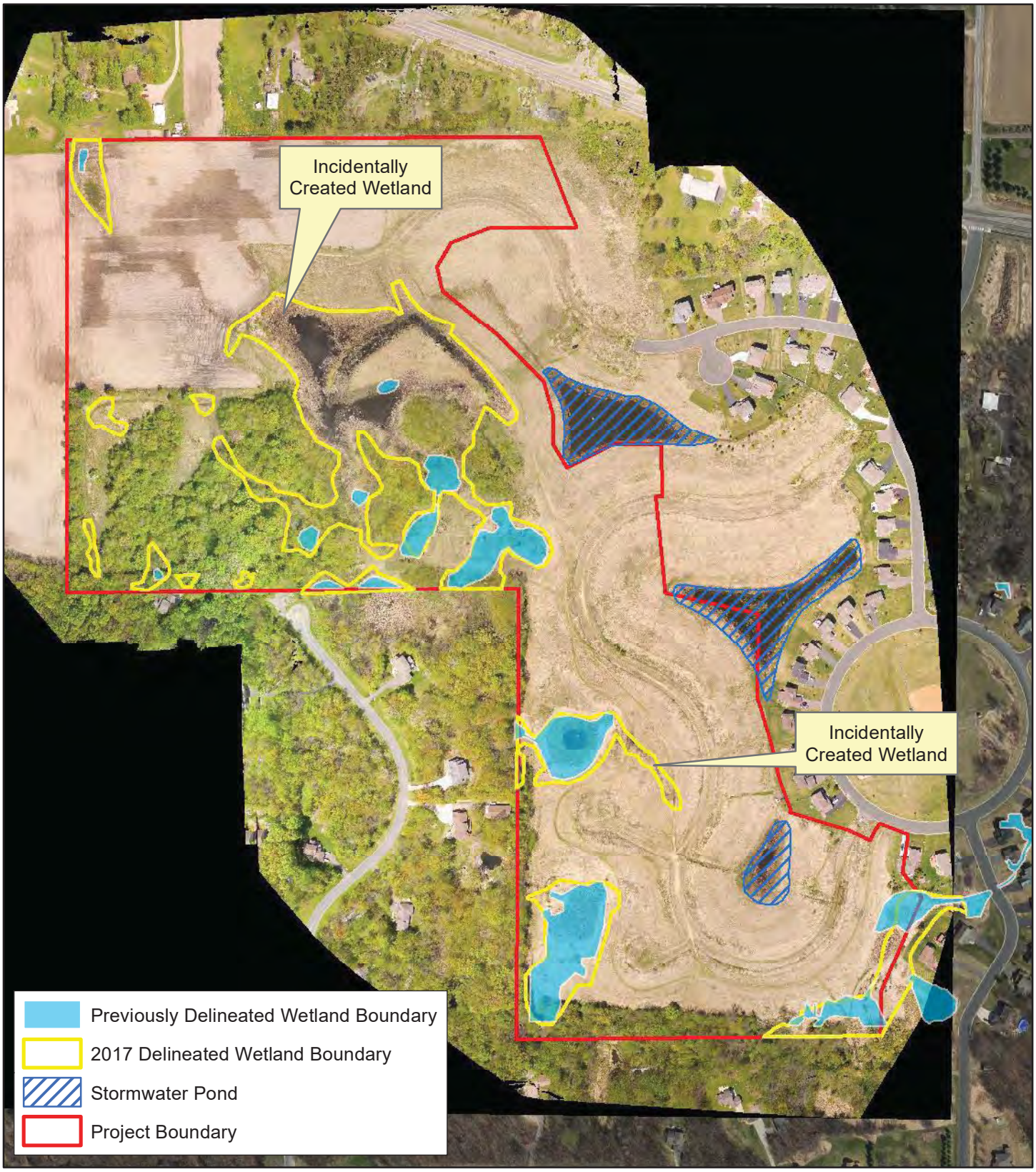

Figure 2A - Existing Conditions (2017 KES Drone Photo)

N

0 400 Feet

KJOLHAUG ENVIRONMENTAL SERVICES COMPANY

Source: MnGeo, ESRI Imagery Basemap

Crow River Heights West (KES 2017-052)
Hanover, Minnesota

Note: Boundaries indicated on this figure are approximate and do not constitute an official survey product.

Figure 3 - National Wetlands Inventory

N

0 500 Feet

KJOLHAUG ENVIRONMENTAL SERVICES COMPANY

Source: Minnesota DNR (2013), USFWS

Crow River Heights West (KES 2017-052)
Hanover, Minnesota

Note: Boundaries indicated on this figure are approximate and do not constitute an official survey product.

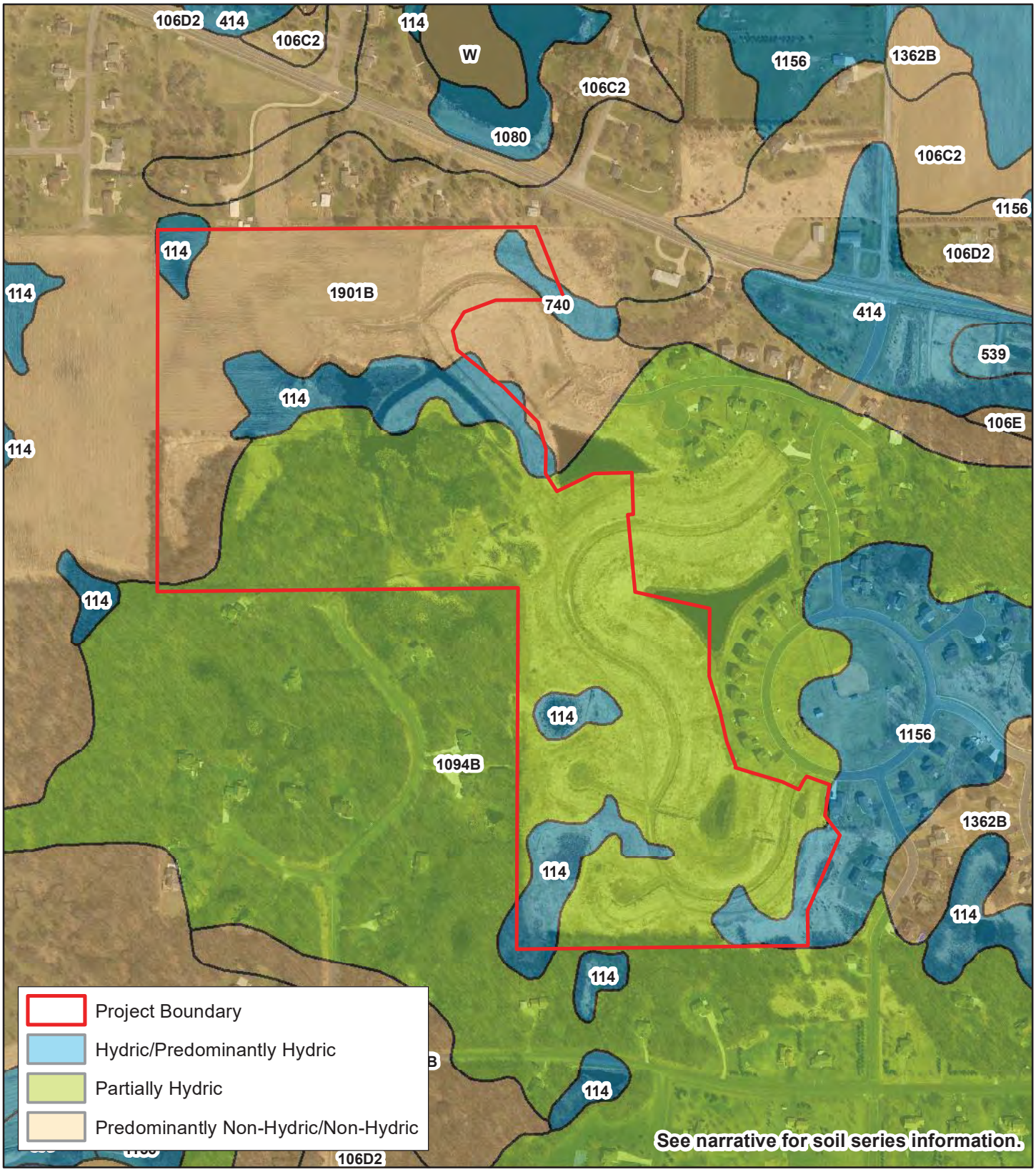

Figure 4 - Soil Survey

N

0 500 Feet

KJOLHAUG ENVIRONMENTAL SERVICES COMPANY

Source: USDA, NRCS

Crow River Heights West (KES 2017-052)
Hanover, Minnesota

Note: Boundaries indicated on this figure are approximate and do not constitute an official survey product.

Figure 5 - DNR Public Waters Inventory

N

0 1,000 Feet

KJOLHAUG ENVIRONMENTAL SERVICES COMPANY

Source: Minnesota DNR

Crow River Heights West (KES 2017-052)
Hanover, Minnesota

Note: Boundaries indicated on this figure are approximate and do not constitute an official survey product.

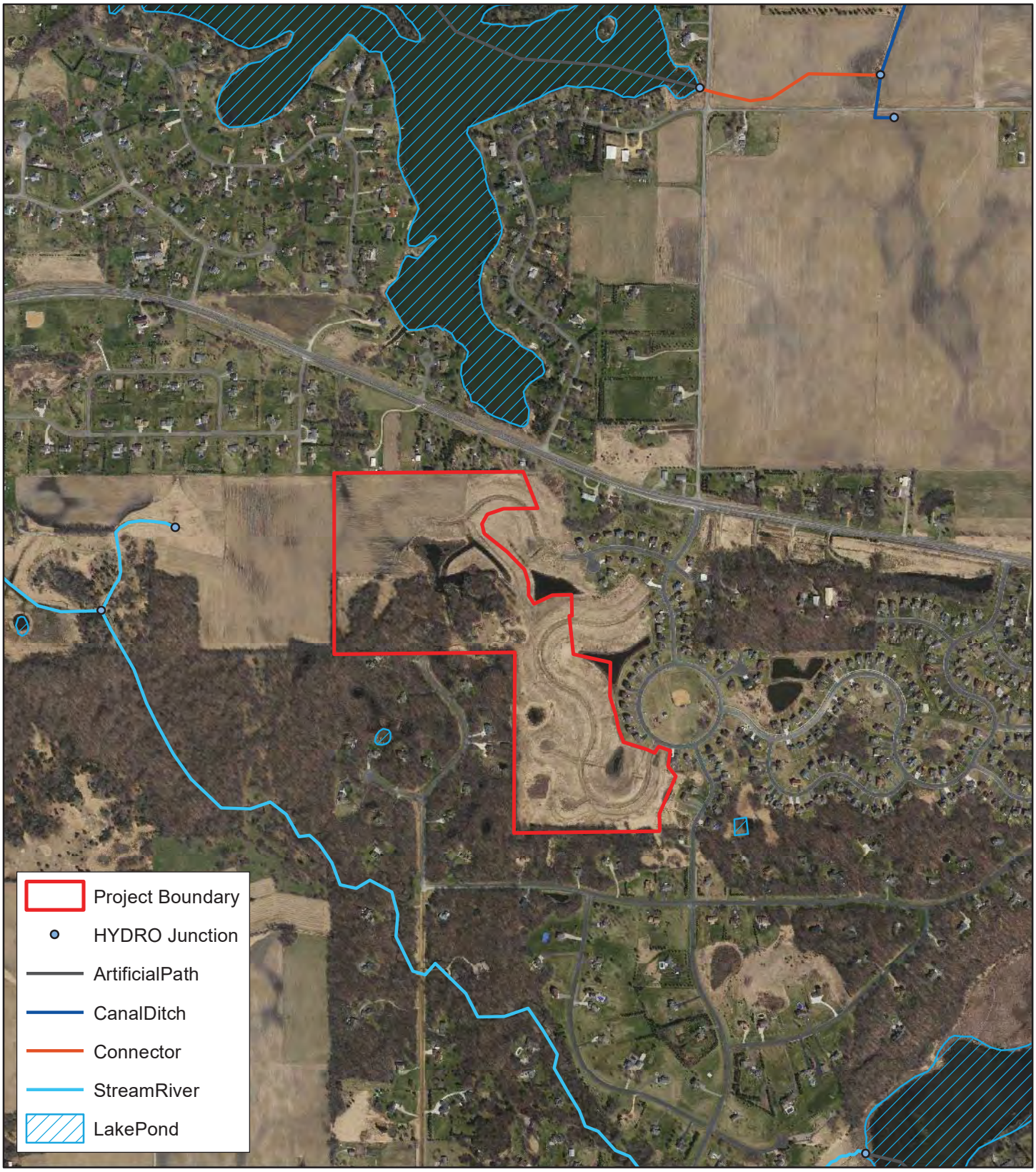

Figure 6 - National Hydrography Dataset

N

0 1,000 Feet

KJOLHAUG ENVIRONMENTAL SERVICES COMPANY

Source: USGS

Crow River Heights West (KES 2017-052)
Hanover, Minnesota

Note: Boundaries indicated on this figure are approximate and do not constitute an official survey product.

Figure 7 - Offsite Hydrology Assessment Areas (2013 FSA Photo)

N

0 400 Feet

KJOLHAUG ENVIRONMENTAL SERVICES COMPANY

Source: MnGeo, ESRI Imagery Basemap

Crow River Heights West (KES 2017-052)
Hanover, Minnesota

Note: Boundaries indicated on this figure are approximate and do not constitute an official survey product.

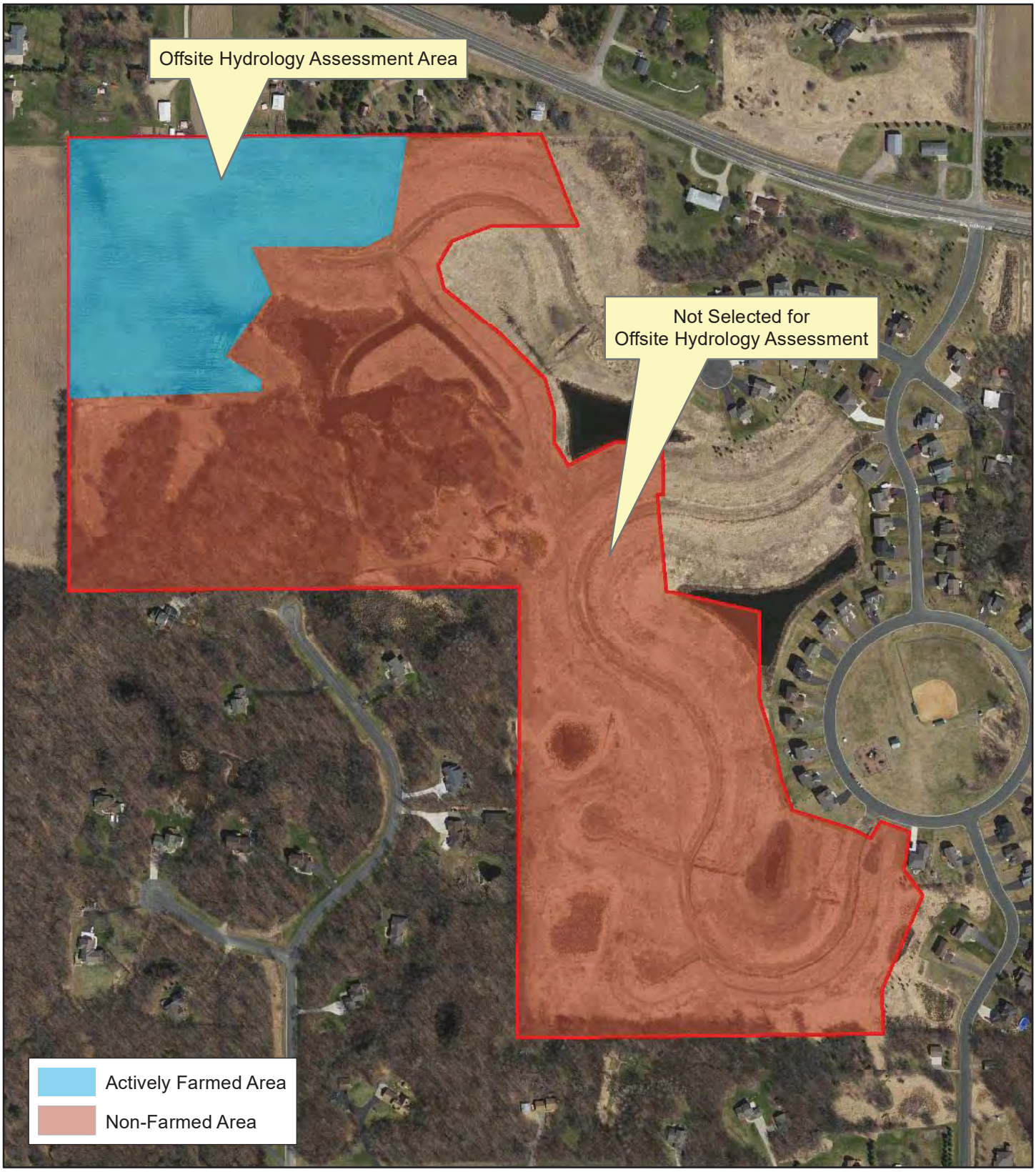

Figure 7A - Offsite Hydrology Assessment Areas

N

0 400 Feet

KJOLHAUG ENVIRONMENTAL SERVICES COMPANY

Source: MnGeo, ESRI Imagery Basemap

Crow River Heights West (KES 2017-052)
Hanover, Minnesota

Note: Boundaries indicated on this figure are approximate and do not constitute an official survey product.

Crow River Heights West Site

Wetland Delineation Report

APPENDIX A

Joint Application Form for Activities Affecting Water Resources in Minnesota

Joint Application Form for Activities Affecting Water Resources in Minnesota

This joint application form is the accepted means for initiating review of proposals that may affect a water resource (wetland, tributary, lake, etc.) in the State of Minnesota under state and federal regulatory programs. Applicants for Minnesota Department of Natural Resources (DNR) Public Waters permits **MUST** use the MPARS online permitting system for submitting applications to the DNR. Applicants can use the information entered into MPARS to substitute for completing parts of this joint application form (see the paragraph on MPARS at the end of the joint application form instructions for additional information). This form is only applicable to the water resource aspects of proposed projects under state and federal regulatory programs; other local applications and approvals may be required. Depending on the nature of the project and the location and type of water resources impacted, multiple authorizations may be required as different regulatory programs have different types of jurisdiction over different types of resources.

Regulatory Review Structure

Federal

The St. Paul District of the U.S. Army Corps of Engineers (Corps) is the federal agency that regulates discharges of dredged or fill material into waters of the United States (wetlands, tributaries, lakes, etc.) under Section 404 of the Clean Water Act (CWA) and regulates work in navigable waters under Section 10 of the Rivers and Harbors Act. Applications are assigned to Corps project managers who are responsible for implementing the Corps regulatory program within a particular geographic area.

State

There are three state regulatory programs that regulate activities affecting water resources. The Wetland Conservation Act (WCA) regulates most activities affecting wetlands. It is administered by local government units (LGUs) which can be counties, townships, cities, watershed districts, watershed management organizations or state agencies (on state-owned land). The Minnesota DNR Division of Ecological and Water Resources issues permits for work in specially-designated public waters via the Public Waters Work Permit Program (DNR Public Waters Permits). The Minnesota Pollution Control Agency (MPCA) under Section 401 of the Clean Water Act certifies that discharges of dredged or fill material authorized by a federal permit or license comply with state water quality standards. One or more of these regulatory programs may be applicable to any one project.

Required Information

Prior to submitting an application, applicants are **strongly encouraged** to seek input from the Corps Project Manager and LGU staff to identify regulatory issues and required application materials for their proposed project. Project proponents can request a pre-application consultation with the Corps and LGU to discuss their proposed project by providing the information required in Sections 1 through 5 of this joint application form to facilitate a meaningful discussion about their project. Many LGUs provide a venue (such as regularly scheduled technical evaluation panel meetings) for potential applicants to discuss their projects with multiple agencies prior to submitting an application. Contact information is provided below.

The following bullets outline the information generally required for several common types of determinations/authorizations.

- For delineation approvals and/or jurisdictional determinations, submit Parts 1, 2 and 5, and Attachment A.
- For activities involving CWA/WCA exemptions, WCA no-loss determinations, and activities not requiring mitigation, submit Parts 1 through 5, and Attachment B.
- For activities requiring compensatory mitigation/replacement plan, submit Parts 1 thru 5, and Attachments C and D.
- For local road authority activities that qualify for the state's local road wetland replacement program, submit Parts 1 through 5, and Attachments C, D (if applicable), and E to both the Corps and the LGU.

Submission Instructions

Send the completed joint application form and all required attachments to:

U.S Army Corps of Engineers. Applications may be sent directly to the appropriate Corps Office. For a current listing of areas of responsibilities and contact information, visit the St. Paul District's website at: http://www.mvp.usace.army.mil/Missions/Regulatory.aspx and select "Minnesota" from the contact Information box. Alternatively, applications may be sent directly to the St. Paul District Headquarters and the Corps will forward them to the appropriate field office.

Section 401 Water Quality Certification: Applicants do not need to submit the joint application form to the MPCA unless specifically requested. The MPCA will request a copy of the completed joint application form directly from an applicant when they determine an individual 401 water quality certification is required for a proposed project.

Wetland Conservation Act Local Government Unit: Send to the appropriate Local Government Unit. If necessary, contact your county Soil and Water Conservation District (SWCD) office or visit the Board of Water and Soil Resources (BWSR) web site (www.bwsr.state.mn.us) to determine the appropriate LGU.

DNR Public Waters Permitting: In 2014 the DNR will begin using the Minnesota DNR Permitting and Reporting System (MPARS) for submission of Public Waters permit applications (https://webapps11.dnr.state.mn.us/mpars/public/authentication/login). Applicants for Public Waters permits **MUST** use the MPARS online permitting system for submitting applications to the DNR. To avoid duplication and to streamline the application process among the various resource agencies, applicants can use the information entered into MPARS to substitute for completing parts of this joint application form. The MPARS print/save function will provide the applicant with a copy of the Public Waters permit application which, at a minimum, will satisfy Parts one and two of this joint application. For certain types of activities, the MPARS application may also provide all of the necessary information required under Parts three and four of the joint application. However, it is the responsibility of the Applicant to make sure that the joint application contains all of the required information, including identification of all aquatic resources impacted by the project (see Part four of the joint application). After confirming that the MPARS application contains all of the required information in Parts one and two the Applicant may attach a copy to the joint application and fill in any missing information in the remainder of the joint application.

PART ONE: Applicant Information

If applicant is an entity (company, government entity, partnership, etc.), an authorized contact person must be identified. If the applicant is using an agent (consultant, lawyer, or other third party) and has authorized them to act on their behalf, the agent's contact information must also be provided.

Applicant/Landowner Name: Dennis Backes
Mailing Address:
Phone:
E-mail Address:

Authorized Contact (do not complete if same as above):
Mailing Address:
Phone:
E-mail Address:

Agent Name: Adam Cameron
Mailing Address: 26105 Wild Rose Lane, Shorewood MN 55331
Phone: 952-401-8757 Ext. #106
E-mail Address: Adam@kjolhaugenv.com

PART TWO: Site Location Information

County: Wright **City/Township: Hanover**
Parcel ID and/or Address: 108500341102
Legal Description (Section, Township, Range): S:34 T:120N R:24W
Lat/Long (decimal degrees): 45.163671, -93.689999
Attach a map showing the location of the site in relation to local streets, roads, highways.
Approximate size of site (acres) or if a linear project, length (feet): 70.5 Acres

If you know that your proposal will require an individual Permit from the U.S. Army Corps of Engineers, you must provide the names and addresses of all property owners adjacent to the project site. This information may be provided by attaching a list to your application or by using block 25 of the Application for Department of the Army permit which can be obtained at:

http://www.mvp.usace.army.mil/Portals/57/docs/regulatory/RegulatoryDocs/engform_4345_2012oct.pdf

PART THREE: General Project/Site Information

If this application is related to a delineation approval, exemption determination, jurisdictional determination, or other correspondence submitted ***prior to*** this application then describe that here and provide the Corps of Engineers project number.

Describe the project that is being proposed, the project purpose and need, and schedule for implementation and completion. The project description must fully describe the nature and scope of the proposed activity including a description of all project elements that effect aquatic resources (wetland, lake, tributary, etc.) and must also include plans and cross section or profile drawings showing the location, character, and dimensions of all proposed activities and aquatic resource impacts.

Project Name and/or Number: Crow River Heights West

PART FOUR: Aquatic Resource Impact[1] Summary

If your proposed project involves a direct or indirect impact to an aquatic resource (wetland, lake, tributary, etc.) identify each impact in the table below. Include all anticipated impacts, including those expected to be temporary. Attach an overhead view map, aerial photo, and/or drawing showing all of the aquatic resources in the project area and the location(s) of the proposed impacts. Label each aquatic resource on the map with a reference number or letter and identify the impacts in the following table.

Aquatic Resource ID (as noted on overhead view)	Aquatic Resource Type (wetland, lake, tributary etc.)	Type of Impact (fill, excavate, drain, or remove vegetation)	Duration of Impact Permanent (P) or Temporary (T)[1]	Size of Impact[2]	Overall Size of Aquatic Resource [3]	Existing Plant Community Type(s) in Impact Area[4]	County, Major Watershed #, and Bank Service Area # of Impact Area[5]

[1]If impacts are temporary; enter the duration of the impacts in days next to the "T". For example, a project with a temporary access fill that would be removed after 220 days would be entered "T (220)".
[2]Impacts less than 0.01 acre should be reported in square feet. Impacts 0.01 acre or greater should be reported as acres and rounded to the nearest 0.01 acre. Tributary impacts must be reported in linear feet of impact and an area of impact by indicating first the linear feet of impact along the flowline of the stream followed by the area impact in parentheses). For example, a project that impacts 50 feet of a stream that is 6 feet wide would be reported as 50 ft (300 square feet).
[3]This is generally only applicable if you are applying for a de minimis exemption under MN Rules 8420.0420 Subp. 8, otherwise enter "N/A".
[4]Use *Wetland Plants and Plant Community Types of Minnesota and Wisconsin* 3rd Ed. as modified in MN Rules 8420.0405 Subp. 2.
[5]Refer to Major Watershed and Bank Service Area maps in MN Rules 8420.0522 Subp. 7.

If any of the above identified impacts have already occurred, identify which impacts they are and the circumstances associated with each:

PART FIVE: Applicant Signature

☐ Check here if you are requesting a pre-application consultation with the Corps and LGU based on the information you have provided. Regulatory entities will not initiate a formal application review if this box is checked.

By signature below, I attest that the information in this application is complete and accurate. I further attest that I possess the authority to undertake the work described herein.

Signature: 5-17-17 Date:

I hereby authorize to act on my behalf as my agent in the processing of this application and to furnish, upon request, supplemental information in support of this application.

[1] **The term "impact" as used in this joint application form is a generic term used for disclosure purposes to identify activities that may require approval from one or more regulatory agencies. For purposes of this form it is not meant to indicate whether or not those activities may require mitigation/replacement.**

Attachment A
Request for Delineation Review, Wetland Type Determination, or Jurisdictional Determination

By submission of the enclosed wetland delineation report, I am requesting that the U.S. Army Corps of Engineers, St. Paul District (Corps) and/or the Wetland Conservation Act Local Government Unit (LGU) provide me with the following (check all that apply):

☒ **Wetland Type Confirmation**

☒ **Delineation Concurrence**. Concurrence with a delineation is a written notification from the Corps and a decision from the LGU concurring, not concurring, or commenting on the boundaries of the aquatic resources delineated on the property. Delineation concurrences are generally valid for five years unless site conditions change. Under this request alone, the Corps will not address the jurisdictional status of the aquatic resources on the property, only the boundaries of the resources within the review area (including wetlands, tributaries, lakes, etc.).

☐ **Preliminary Jurisdictional Determination**. A preliminary jurisdictional determination (PJD) is a non-binding written indication from the Corps that waters, including wetlands, identified on a parcel may be waters of the United States. For purposes of computation of impacts and compensatory mitigation requirements, a permit decision made on the basis of a PJD will treat all waters and wetlands in the review area as if they are jurisdictional waters of the U.S. PJDs are advisory in nature and may not be appealed.

☒ **Approved Jurisdictional Determination**. An approved jurisdictional determination (AJD) is an official Corps determination that jurisdictional waters of the United States are either present or absent on the property. AJDs can generally be relied upon by the affected party for five years. An AJD may be appealed through the Corps administrative appeal process.

In order for the Corps and LGU to process your request, the wetland delineation must be prepared in accordance with the 1987 Corps of Engineers Wetland Delineation Manual, any approved Regional Supplements to the 1987 Manual, and the *Guidelines for Submitting Wetland Delineations in Minnesota* (2013).
http://www.mvp.usace.army.mil/Missions/Regulatory/DelineationJDGuidance.aspx

Attachment B
Supporting Information for Applications Involving Exemptions, No Loss Determinations, and Activities Not Requiring Mitigation

Complete this part ***if*** you maintain that the identified aquatic resource impacts in Part Four do not require wetland replacement/compensatory mitigation OR ***if*** you are seeking verification that the proposed water resource impacts are either exempt from replacement or are not under CWA/WCA jurisdiction.

Identify the specific exemption or no-loss provision for which you believe your project or site qualifies:

WCA 8420.0105 Subp. 2D.

Provide a detailed explanation of how your project or site qualifies for the above. Be specific and provide and refer to attachments and exhibits that support your contention. Applicants should refer to rules (e.g. WCA rules), guidance documents (e.g. BWSR guidance, Corps guidance letters/public notices), and permit conditions (e.g. Corps General Permit conditions) to determine the necessary information to support the application. Applicants are strongly encouraged to contact the WCA LGU and Corps Project Manager prior to submitting an application if they are unsure of what type of information to provide:

Please see Section 4.2 of the Wetland Delineation Report (Wetland Descriptions and No-Loss Discussion).

Attachment C
Avoidance and Minimization

Project Purpose, Need, and Requirements. Clearly state the purpose of your project and need for your project. Also include a description of any specific requirements of the project as they relate to project location, project footprint, water management, and any other applicable requirements. Attach an overhead plan sheet showing all relevant features of the project (buildings, roads, etc.), aquatic resource features (impact areas noted) and construction details (grading plans, storm water management plans, etc.), referencing these as necessary:

Avoidance. Both the CWA and the WCA require that impacts to aquatic resources be avoided if practicable alternatives exist. Clearly describe all on-site measures considered to avoid impacts to aquatic resources and discuss at least two project alternatives that avoid all impacts to aquatic resources on the site. These alternatives may include alternative site plans, alternate sites, and/or not doing the project. Alternatives should be feasible and prudent (see MN Rules 8420.0520 Subp. 2 C). Applicants are encouraged to attach drawings and plans to support their analysis:

Minimization. Both the CWA and the WCA require that all unavoidable impacts to aquatic resources be minimized to the greatest extent practicable. Discuss all features of the proposed project that have been modified to minimize the impacts to water resources (see MN Rules 8420.0520 Subp. 4):

Off-Site Alternatives. An off-site alternatives analysis is not required for all permit applications. If you know that your proposal will require an individual permit (standard permit or letter of permission) from the U.S. Army Corps of Engineers, you may be required to provide an off-site alternatives analysis. The alternatives analysis is not required for a complete application but must be provided during the review process in order for the Corps to complete the evaluation of your application and reach a final decision. Applicants with questions about when an off-site alternatives analysis is required should contact their Corps Project Manager.

Attachment D
Replacement/Compensatory Mitigation

Complete this part ***if*** your application involves wetland replacement/compensatory mitigation not associated with the local road wetland replacement program. Applicants should consult Corps mitigation guidelines and WCA rules for requirements.

Replacement/Compensatory Mitigation via Wetland Banking. Complete this section if you are proposing to use credits from an existing wetland bank (with an account number in the State wetland banking system) for all or part of your replacement/compensatory mitigation requirements.

Wetland Bank Account #	County	Major Watershed #	Bank Service Area #	Credit Type (if applicable)	Number of Credits

Applicants should attach documentation indicating that they have contacted the wetland bank account owner and reached at least a tentative agreement to utilize the identified credits for the project. This documentation could be a signed purchase agreement, signed application for withdrawal of credits or some other correspondence indicating an agreement between the applicant and the bank owner. *However, applicants are advised not to enter into a binding agreement to purchase credits until the mitigation plan is approved by the Corps and LGU.*

Project-Specific Replacement/Permittee Responsible Mitigation. Complete this section if you are proposing to pursue actions (restoration, creation, preservation, etc.) to generate wetland replacement/compensatory mitigation credits for this proposed project.

WCA Action Eligible for Credit[1]	Corps Mitigation Compensation Technique[2]	Acres	Credit % Requested	Credits Anticipated[3]	County	Major Watershed #	Bank Service Area #

[1]Refer to the name and subpart number in MN Rule 8420.0526.
[2]Refer to the technique listed in *St. Paul District Policy for Wetland Compensatory Mitigation in Minnesota*.
[3]If WCA and Corps crediting differs, then enter both numbers and distinguish which is Corps and which is WCA.

Explain how each proposed action or technique will be completed (e.g. wetland hydrology will be restored by breaking the tile……) and how the proposal meets the crediting criteria associated with it. Applicants should refer to the Corps mitigation policy language, WCA rule language, and all associated Corps and WCA guidance related to the action or technique:

Attach a site location map, soils map, recent aerial photograph, and any other maps to show the location and other relevant features of each wetland replacement/mitigation site. Discuss in detail existing vegetation, existing landscape features, land use (on and surrounding the site), existing soils, drainage systems (if present), and water sources and movement. Include a topographic map showing key features related to hydrology and water flow (inlets, outlets, ditches, pumps, etc.):

Attach a map of the existing aquatic resources, associated delineation report, and any documentation of regulatory review or approval. Discuss as necessary:

For actions involving construction activities, attach construction plans and specifications with all relevant details. Discuss and provide documentation of a hydrologic and hydraulic analysis of the site to define existing conditions, predict project outcomes, identify specific project performance standards and avoid adverse offsite impacts. Plans and specifications should be prepared by a licensed engineer following standard engineering practices. Discuss anticipated construction sequence and timing:

For projects involving vegetation restoration, provide a vegetation establishment plan that includes information on site preparation, seed mixes and plant materials, seeding/planting plan (attach seeding/planting zone map), planting/seeding methods, vegetation maintenance, and an anticipated schedule of activities:

For projects involving construction or vegetation restoration, identify and discuss goals and specific outcomes that can be determined for credit allocation. Provide a proposed credit allocation table tied to outcomes:

Provide a five-year monitoring plan to address project outcomes and credit allocation:

Discuss and provide evidence of ownership or rights to conduct wetland replacement/mitigation on each site:

Quantify all proposed wetland credits and compare to wetland impacts to identify a proposed wetland replacement ratio. Discuss how this replacement ratio is consistent with Corps and WCA requirements:

By signature below, the applicant attests to the following (only required if application involves project-specific/permittee responsible replacement):

- All proposed replacement wetlands were not:
  - Previously restored or created under a prior approved replacement plan or permit
  - Drained or filled under an exemption during the previous 10 years
  - Restored with financial assistance from public conservation programs
  - Restored using private funds, other than landowner funds, unless the funds are paid back with interest to the individual or organization that funded the restoration and the individual or organization notifies the local government unit in writing that the restored wetland may be considered for replacement.
- The wetland will be replaced before or concurrent with the actual draining or filling of a wetland.
- An irrevocable bank letter of credit, performance bond, or other acceptable security will be provided to guarantee successful completion of the wetland replacement.
- Within 30 days of either receiving approval of this application or beginning work on the project, I will record the Declaration of Restrictions and Covenants on the deed for the property on which the replacement wetland(s) will be located and submit proof of such recording to the LGU and the Corps.

Applicant or Representative: Title:

Signature: _____ Date:

Attachment E
Local Road Replacement Program Qualification

Complete this part ***if*** you are a local road authority (county highway department, city transportation department, etc.) seeking verification that your project (or a portion of your project) qualifies for the MN Local Government Road Wetland Replacement Program (LGRWRP). If portions of your project are not eligible for the LGRWRP, then Attachment D should be completed and attached to your application.

Discuss how your project is a repair, rehabilitation, reconstruction, or replacement of a currently serviceable road to meet state/federal design or safety standards/requirements. Applicants should identify the specific road deficiencies and how the project will rectify them. Attach supporting documents and information as applicable:

Provide a map, plan, and/or aerial photograph accurately depicting wetland boundaries within the project area. Attach associated delineation/determination report or otherwise explain the method(s) used to identify and delineate wetlands. Also attach and discuss any type of review or approval of wetland boundaries or other aspects of the project by a member or members of the local Technical Evaluation Panel (TEP) or Corps of Engineers:

In the table below, identify only the wetland impacts from Part 4 that the road authority has determined should qualify for the LGRWRP.

Wetland Impact ID (as noted on overhead view)	**Type of Impact** (fill, excavate, drain)	**Size of Impact** (square feet or acres to 0.01)	**Existing Plant Community Type(s)** in Impact Area[1]	**County, Major Watershed #, and Bank Service Area #** of Impact[2]

[1]Use *Wetland Plants and Plant Community Types of Minnesota and Wisconsin* 3rd Ed. as modified in MN Rules 8420.0405 Subp. 2.
[2]Refer to Major Watershed and Bank Service Area maps in MN Rules 8420.0522 Subp. 7.

Discuss the feasibility of providing onsite compensatory mitigation/replacement for important site-specific wetland functions:

Please note that under the MN Wetland Conservation Act, projects with less than 10,000 square feet of wetland impact are allowed to commence prior to submission of this notification so long as the notification is submitted within 30 days of the impact. The Clean Water Act has no such provision and requires that permits be obtained prior to any regulated discharges into water of the United States. To avoid potential unauthorized activities, road authorities must, at a minimum, provide a complete application to the Corps and receive a permit prior to commencing work.

By signature below, the road authority attests that they have followed the process in MN Rules 8420.0544 and have determined that the wetland impacts identified in Part 4 are eligible for the MN Local Government Road Wetland Replacement Program.

Road Authority Representative: Title:

Signature: _____ Date:

Technical Evaluation Panel Concurrence: Project Name and/or Number: Crow River Heights West

TEP member: Representing:

Concur with road authority's determination of qualification for the local road wetland replacement program? ☐ Yes ☐ No

Signature: _____ Date:

TEP member: Representing:

Concur with road authority's determination of qualification for the local road wetland replacement program? ☐ Yes ☐ No

Signature: _____ Date:

TEP member: Representing:

Concur with road authority's determination of qualification for the local road wetland replacement program? ☐ Yes ☐ No

Signature: _____ Date:

TEP member: Representing:

Concur with road authority's determination of qualification for the local road wetland replacement program? ☐ Yes ☐ No

Signature: _____ Date:

Upon approval and signature by the TEP, application must be sent to: **Wetland Bank Administration**
Minnesota Board of Water & Soil Resources
520 Lafayette Road North
Saint Paul, MN 55155

Crow River Heights West Site

Wetland Delineation Report

APPENDIX B

Wetland Boundary Survey

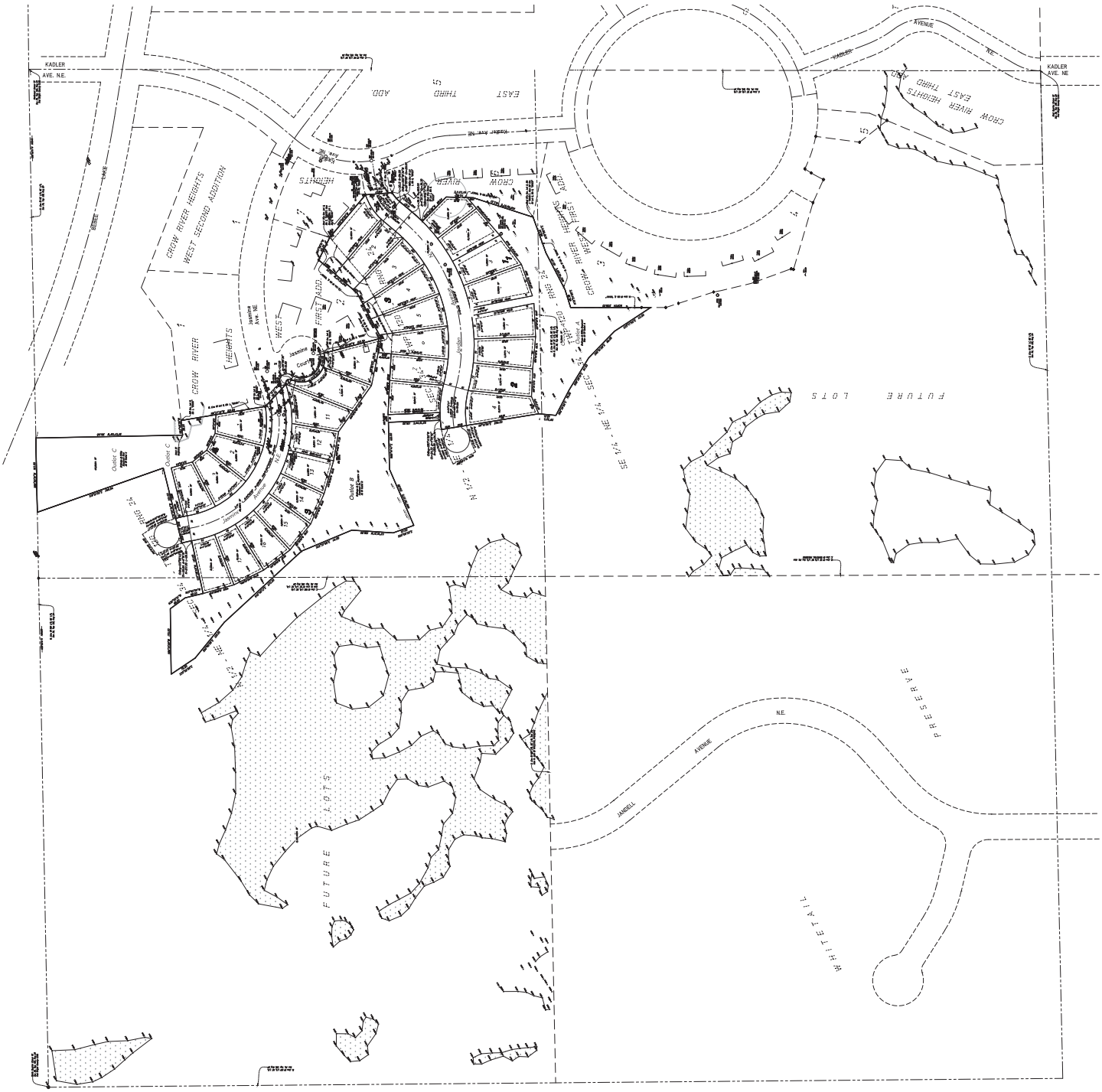
KADLER AVE. N.E.
KADLER AVE. NE
CROW RIVER HEIGHTS WEST SECOND ADDITION
CROW RIVER HEIGHTS
CROW RIVER HEIGHTS WEST FIRST ADD.
CROW RIVER HEIGHTS EAST THIRD ADD.
CROW RIVER HEIGHTS WEST THIRD ADD.
CROW RIVER HEIGHTS EAST THIRD ADD.
FUTURE LOTS
FUTURE LOTS
RESERVE
WHITETAIL
JANDELL AVENUE N.E.
N 1/2 - NE 1/4 - SE 1/4
SE 1/4 - NE 1/4 - SE 1/4
Outlot A
Outlot B
Outlot C

Crow River Heights West Site

Wetland Delineation Report

APPENDIX C

Precipitation Data & Supporting Information

Crow River Heights West, Hanover MN: Precipitation Summary
Source: Minnesota Climatology Working Group

Monthly Totals: 2017 (latitude: 45.15929 longitude: 93.69616)

Target: T120 R24 S34

mon	year	cc	tttN	rrW	ss	nnnn	oooooooo	pre (inches)
Jan	2017	86	119N	24W	29	NWS	ROCKFORD	.59
Feb	2017	86	119N	24W	29	NWS	ROCKFORD	.73
Mar	2017	86	119N	24W	29	NWS	ROCKFORD	.43
Apr	2017	86	119N	24W	29	NWS	ROCKFORD	3.14

Feb/Mar/Apr/May Daily Records

Feb 1, 2017	0
Feb 2, 2017	0
Feb 3, 2017	0
Feb 4, 2017	0
Feb 5, 2017	0
Feb 6, 2017	0
Feb 7, 2017	0
Feb 8, 2017	.01
Feb 9, 2017	0
Feb 10, 2017	0
Feb 11, 2017	0
Feb 12, 2017	0
Feb 13, 2017	0
Feb 14, 2017	0
Feb 15, 2017	0
Feb 16, 2017	0
Feb 17, 2017	0
Feb 18, 2017	0
Feb 19, 2017	0
Feb 20, 2017	0
Feb 21, 2017	.72
Feb 22, 2017	0
Feb 23, 2017	0
Feb 24, 2017	0
Feb 25, 2017	0
Feb 26, 2017	0
Feb 27, 2017	0
Feb 28, 2017	0

Mar 1, 2017	.03
Mar 2, 2017	0
Mar 3, 2017	0
Mar 4, 2017	0
Mar 5, 2017	0
Mar 6, 2017	0
Mar 7, 2017	0
Mar 8, 2017	0
Mar 9, 2017	0
Mar 10, 2017	0
Mar 11, 2017	0
Mar 12, 2017	0
Mar 13, 2017	.18
Mar 14, 2017	0
Mar 15, 2017	0
Mar 16, 2017	0
Mar 17, 2017	0
Mar 18, 2017	0
Mar 19, 2017	0
Mar 20, 2017	0
Mar 21, 2017	0
Mar 22, 2017	0
Mar 23, 2017	0
Mar 24, 2017	.13
Mar 25, 2017	0
Mar 26, 2017	.07
Mar 27, 2017	.01
Mar 28, 2017	0
Mar 29, 2017	0
Mar 30, 2017	.01
Mar 31, 2017	0

Apr 1, 2017	0
Apr 2, 2017	0
Apr 3, 2017	0
Apr 4, 2017	0
Apr 5, 2017	0
Apr 6, 2017	0
Apr 7, 2017	0
Apr 8, 2017	0
Apr 9, 2017	0
Apr 10, 2017	0
Apr 11, 2017	.43
Apr 12, 2017	0
Apr 13, 2017	.20
Apr 14, 2017	0
Apr 15, 2017	.16
Apr 16, 2017	.38
Apr 17, 2017	0
Apr 18, 2017	.04
Apr 19, 2017	.35
Apr 20, 2017	.54
Apr 21, 2017	0
Apr 22, 2017	0
Apr 23, 2017	0
Apr 24, 2017	0
Apr 25, 2017	0
Apr 26, 2017	.87
Apr 27, 2017	.17
Apr 28, 2017	0
Apr 29, 2017	0
Apr 30, 2017	0

May 1, 2017	0.84
May 2, 2017	0.18
May 3, 2017	0

1981-2010 Summary Statistics															
	Jan	Feb	Mar	Apr	May	Jun	Jul	Aug	Sep	Oct	Nov	Dec	WARM	ANN	WAT
30%	0.39	0.40	1.14	1.95	1.89	3.27	2.67	2.98	2.39	1.25	0.87	0.49	15.51	25.61	25.46
70%	0.78	0.88	1.69	3.00	4.04	4.96	4.11	4.34	4.85	3.11	1.98	1.27	20.66	31.34	31.27
mean	0.67	0.63	1.52	2.61	3.16	4.34	3.63	3.93	3.48	2.43	1.56	0.98	18.53	28.94	28.79

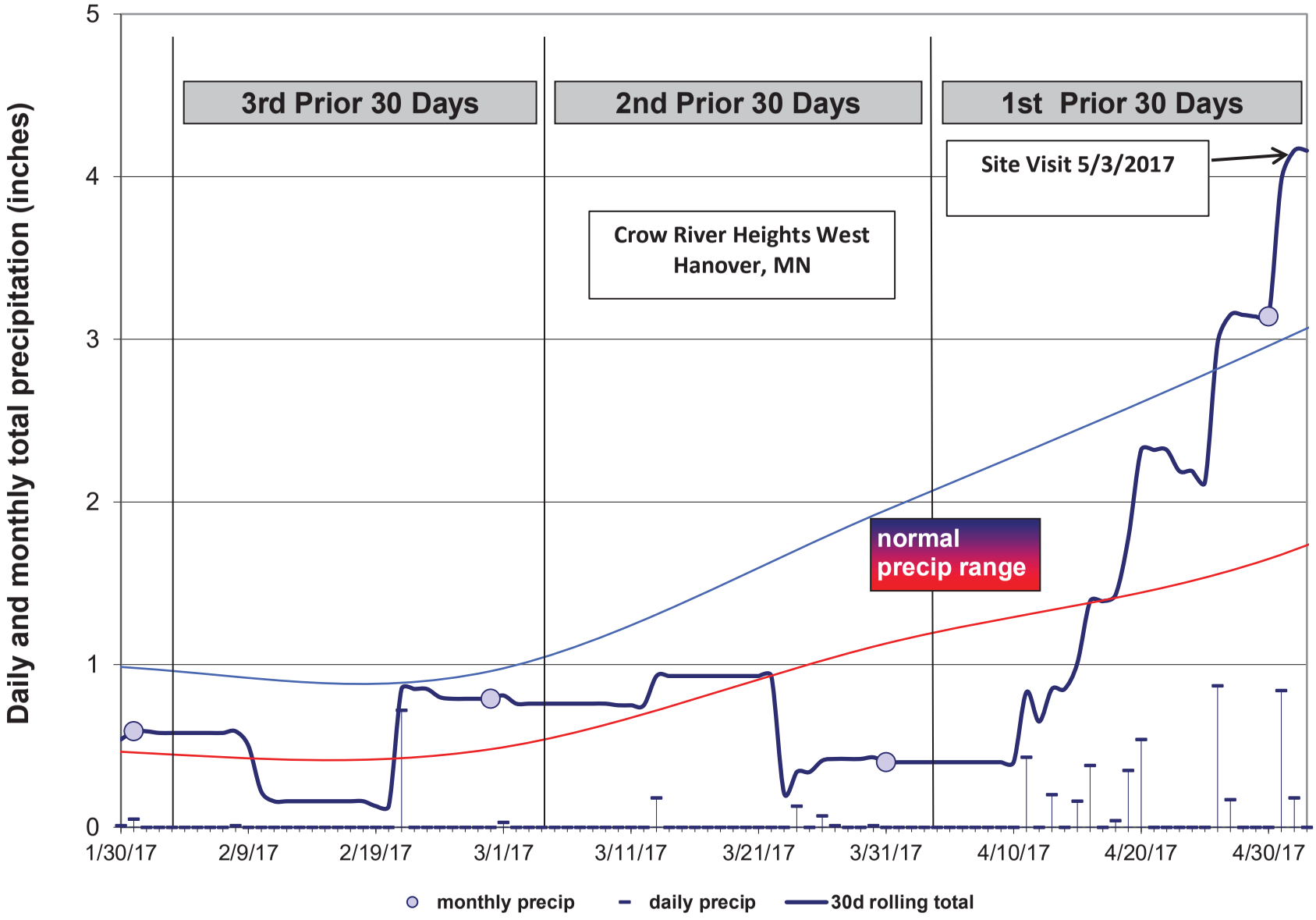
Daily and monthly total precipitation (inches)
5
4
3
2
1
0
3rd Prior 30 Days
2nd Prior 30 Days
1st Prior 30 Days
Site Visit 5/3/2017
Crow River Heights West
Hanover, MN
normal
precip range
1/30/17
2/9/17
2/19/17
3/1/17
3/11/17
3/21/17
3/31/17
4/10/17
4/20/17
4/30/17
monthly precip
daily precip
30d rolling total

Minnesota State Climatology Office

State Climatology Office - DNR Division of Ecological and Water Resources University of Minnesota

Precipitation Worksheet Using Gridded Database

Precipitation data for target wetland location:

county: Wright
township name: Frankfort
nearest community: Hanover
township number: 120N
range number: 24W
section number: 34

Aerial photograph or site visit date:
Wednesday, May 3, 2017

Score using 1981-2010 normal period

values are in inches A 'R' following a monthly total indicates a provisional value derived from radar-based estimates.	first prior month: April 2017	second prior month: March 2017	third prior month: February 2017
estimated precipitation total for this location:	3.24	0.65	0.73
there is a 30% chance this location will have less than:	1.95	1.14	0.40
there is a 30% chance this location will have more than:	3.00	1.69	0.88
type of month: dry normal wet	wet	dry	normal
monthly score	3 * 3 = 9	2 * 1 = 2	1 * 2 = 2
multi-month score: 6 to 9 (dry) 10 to 14 (normal) 15 to 18 (wet)	13 (Normal)		

Other Resources:

- retrieve daily precipitation data
- view radar-based precipitation estimates
- view weekly precipitation maps
- Evaluating Antecedent Precipitation Conditions (BWSR)

Hydric Soil List - All Components

This table lists the map unit components and their hydric status in the survey area. This list can help in planning land uses; however, onsite investigation is recommended to determine the hydric soils on a specific site (National Research Council, 1995; Hurt and others, 2002).

The three essential characteristics of wetlands are hydrophytic vegetation, hydric soils, and wetland hydrology (Cowardin and others, 1979; U.S. Army Corps of Engineers, 1987; National Research Council, 1995; Tiner, 1985). Criteria for all of the characteristics must be met for areas to be identified as wetlands. Undrained hydric soils that have natural vegetation should support a dominant population of ecological wetland plant species. Hydric soils that have been converted to other uses should be capable of being restored to wetlands.

Hydric soils are defined by the National Technical Committee for Hydric Soils (NTCHS) as soils that formed under conditions of saturation, flooding, or ponding long enough during the growing season to develop anaerobic conditions in the upper part (Federal Register, 1994). These soils, under natural conditions, are either saturated or inundated long enough during the growing season to support the growth and reproduction of hydrophytic vegetation.

The NTCHS definition identifies general soil properties that are associated with wetness. In order to determine whether a specific soil is a hydric soil or nonhydric soil, however, more specific information, such as information about the depth and duration of the water table, is needed. Thus, criteria that identify those estimated soil properties unique to hydric soils have been established (Federal Register, 2002). These criteria are used to identify map unit components that normally are associated with wetlands. The criteria used are selected estimated soil properties that are described in "Soil Taxonomy" (Soil Survey Staff, 1999) and "Keys to Soil Taxonomy" (Soil Survey Staff, 2006) and in the "Soil Survey Manual" (Soil Survey Division Staff, 1993).

If soils are wet enough for a long enough period of time to be considered hydric, they should exhibit certain properties that can be easily observed in the field. These visible properties are indicators of hydric soils. The indicators used to make onsite determinations of hydric soils are specified in "Field Indicators of Hydric Soils in the United States" (Hurt and Vasilas, 2006).

Hydric soils are identified by examining and describing the soil to a depth of about 20 inches. This depth may be greater if determination of an appropriate indicator so requires. It is always recommended that soils be excavated and described to the depth necessary for an understanding of the redoximorphic processes. Then, using the completed soil descriptions, soil scientists can compare the soil features required by each indicator and specify which indicators have been matched with the conditions observed in the soil. The soil can be identified as a hydric soil if at least one of the approved indicators is present.

Map units that are dominantly made up of hydric soils may have small areas, or inclusions, of nonhydric soils in the higher positions on the landform, and map units dominantly made up of nonhydric soils may have inclusions of hydric soils in the lower positions on the landform.

The criteria for hydric soils are represented by codes in the table (for example, 2). Definitions for the codes are as follows:

1. All Histels except for Folistels, and Histosols except for Folists.
2. Soils in Aquic suborders, great groups, or subgroups, Albolls suborder, Historthels great group, Histoturbels great group, Pachic subgroups, or Cumulic subgroups that:
   A. Based on the range of characteristics for the soil series, will at least in part meet one or more Field Indicators of Hydric Soils in the United States, or
   B. Show evidence that the soil meets the definition of a hydric soil;
3. Soils that are frequently ponded for long or very long duration during the growing season.
   A. Based on the range of characteristics for the soil series, will at least in part meet one or more Field Indicators of Hydric Soils in the United States, or
   B. Show evidence that the soil meets the definition of a hydric soil;
4. Map unit components that are frequently flooded for long duration or very long duration during the growing season that:
   A. Based on the range of characteristics for the soil series, will at least in part meet one or more Field Indicators of Hydric Soils in the United States, or
   B. Show evidence that the soil meets the definition of a hydric soil;

Hydric Condition: Food Security Act information regarding the ability to grow a commodity crop without removing woody vegetation or manipulating hydrology.

References:

Federal Register. July 13, 1994. Changes in hydric soils of the United States.

Federal Register. Doc. 2012-4733 Filed 2-28-12. February, 28, 2012. Hydric soils of the United States.

Soil Survey Division Staff. 1993. Soil survey manual. Soil Conservation Service. U.S. Department of Agriculture Handbook 18.

Soil Survey Staff. 1999. Soil taxonomy: A basic system of soil classification for making and interpreting soil surveys. 2nd edition. Natural Resources Conservation Service. U.S. Department of Agriculture Handbook 436.

Soil Survey Staff. 2010. Keys to soil taxonomy. 11th edition. U.S. Department of Agriculture, Natural Resources Conservation Service.

Vasilas, L.M., G.W. Hurt, and C.V. Noble, editors. Version 7.0, 2010. Field indicators of hydric soils in the United States.

Report—Hydric Soil List - All Components

Hydric Soil List - All Components–MN171-Wright County, Minnesota					
Map symbol and map unit name	**Component/Local Phase**	**Comp. pct.**	**Landform**	**Hydric status**	**Hydric criteria met (code)**
114: Glencoe clay loam, 0 to 1 percent slopes	Glencoe	65-95	Depressions	Yes	2
	Okoboji	5-15	Depressions	Yes	2
	Canisteo	0-10	Ground moraines,rims on depressions	Yes	2
	Webster	0-10	Ground moraines	Yes	2
740: Hamel-Glencoe complex, 0 to 2 percent slopes	Hamel	50-60	Ground moraines	Yes	2
	Glencoe	30-40	Depressions	Yes	2
	Terril	0-20	Ground moraines	No	—
1094B: Angus-Cordova complex, 0 to 5 percent slopes	Angus	60	Hills on moraines	No	—
	Cordova	30	Drainageways on moraines	Yes	2
	Le Sueur	5	—	No	—
	Glencoe-Depressional	5	Depressions	Yes	2,3
1156: Cordova loam, 0 to 2 percent slopes	Cordova	85	Drainageways on moraines	Yes	2
	Glencoe-Depressional	10	Depressions	Yes	2,3
	Nessel	5	—	No	—
1901B: Angus-Le Sueur complex, 1 to 5 percent slopes	Angus	60	Hills on moraines	No	—
	Le Sueur	30	Moraines	No	—
	Cordova	10	Swales	Yes	2

Data Source Information

Soil Survey Area: Wright County, Minnesota
Survey Area Data: Version 10, Sep 19, 2016

Crow River Heights West Site

Wetland Delineation Report

APPENDIX D

Wetland Delineation Data Forms

WETLAND DETERMINATION DATA FORM - Midwest Region

Project/Site: Crow River Heights West | City/County: Hanover/Wright | Sampling Date: 5/3/2017

Applicant/Owner: Dennis Backes | State: MN | Sampling Point: SP1-1U

Investigator(s): B.Carlson, A.Krinke, A.Cameron | Section, Township, Range: S:34 T:120N R:24W

Landform (hillslope, terrace, etc.): Hillslope | Local relief (concave, convex, none): Linear

Slope (%): 3 - 5 | Lat: | Long: | Datum:

Soil Map Unit Name: Angus-Cordova Complex (Partially Hydric) | NWI Classification: None

Are climatic/hydrologic conditions of the site typical for this time of the year? Y (If no, explain in remarks)

Are vegetation ____, soil ____, or hydrology ____ significantly disturbed?

Are vegetation ____, soil ____, or hydrology ____ naturally problematic?

Are "normal circumstances" present? Yes

SUMMARY OF FINDINGS

(If needed, explain any answers in remarks.)

Hydrophytic vegetation present?	Y	**Is the sampled area within a wetland?**	N
Hydric soil present?	N		
Indicators of wetland hydrology present?	N	If yes, optional wetland site ID:	

Remarks: (Explain alternative procedures here or in a separate report.)

Precipitation from Gridded Database Method within normal range. 30-day precipitation rolling total wetter than typical.

VEGETATION -- Use scientific names of plants.

Tree Stratum (Plot size: 30 ft Radius)	Absolute % Cover	Dominant Species	Indicator Staus
1 *Quercus macrocarpa*	10	Y	FAC
2			
3			
4			
5			
	10 = Total Cover		

Sapling/Shrub stratum (Plot size: 15 ft Radius)			
1 *Ulmus americana*	10	Y	FACW
2 *Rhamnus cathartica*	10	Y	FAC
3 *Acer saccharum*	10	Y	FACU
4			
5			
	30 = Total Cover		

Herb stratum (Plot size: 5 ft Radius)			
1 *Geranium maculatum*	50	Y	FACU
2 *Anemone virginiana*	10	N	FACU
3 *Viola sororia*	5	N	FAC
4			
5			
6			
7			
8			
9			
10			
	65 = Total Cover		

Woody vine stratum (Plot size: 30 ft Radius)			
1			
2			
	0 = Total Cover		

Dominance Test Worksheet

Number of Dominant Species that are OBL, FACW, or FAC: 3 (A)

Total Number of Dominant Species Across all Strata: 5 (B)

Percent of Dominant Species that are OBL, FACW, or FAC: 60.00% (A/B)

Prevalence Index Worksheet

Total % Cover of:

OBL species	0	x 1 =	0	
FACW species	10	x 2 =	20	
FAC species	25	x 3 =	75	
FACU species	70	x 4 =	280	
UPL species	0	x 5 =	0	
Column totals	105	(A)	375	(B)

Prevalence Index = B/A = 3.57

Hydrophytic Vegetation Indicators:

- ___ Rapid test for hydrophytic vegetation
- X Dominance test is >50%
- ___ Prevalence index is ≤3.0*
- ___ Morphogical adaptations* (provide supporting data in Remarks or on a separate sheet)
- ___ Problematic hydrophytic vegetation* (explain)

*Indicators of hydric soil and wetland hydrology must be present, unless disturbed or problematic

Hydrophytic vegetation present? Y

Remarks: (Include photo numbers here or on a separate sheet)

Prevalence index is greater than 3.0

SOIL

Sampling Point: SP1-1U

Profile Description: (Describe to the depth needed to document the indicator or confirm the absence of indicators.)

Depth (Inches)	Matrix Color (moist)	Matrix %	Redox Features Color (moist)	Redox %	Type*	Loc**	Texture	Remarks
0-8	10YR 3/1	100					Clay Loam	
8-16	10YR 3/2	100					Clay Loam	
16-20	10YR 3/2	100					Sandy Clay Loam	

*Type: C = Concentration, D = Depletion, RM = Reduced Matrix, MS = Masked Sand Grains. **Location: PL = Pore Lining, M = Matrix

Hydric Soil Indicators:

- ___ Histisol (A1)
- ___ Histic Epipedon (A2)
- ___ Black Histic (A3)
- ___ Hydrogen Sulfide (A4)
- ___ Stratified Layers (A5)
- ___ 2 cm Muck (A10)
- ___ Depleted Below Dark Surface (A11)
- ___ Thick Dark Surface (A12)
- ___ Sandy Mucky Mineral (S1)
- ___ 5 cm Mucky Peat or Peat (S3)
- ___ Sandy Gleyed Matrix (S4)
- ___ Sandy Redox (S5)
- ___ Stripped Matrix (S6)
- ___ Loamy Mucky Mineral (F1)
- ___ Loamy Gleyed Matrix (F2)
- ___ Depleted Matrix (F3)
- ___ Redox Dark Surface (F6)
- ___ Depleted Dark Surface (F7)
- ___ Redox Depressions (F8)

Indicators for Problematic Hydric Soils:

- ___ Coast Prairie Redox (A16) (**LRR K, L, R**)
- ___ Dark Surface (S7) (**LRR K, L)**
- ___ Iron-Manganese Masses (F12) (**LRR K, L, R**)
- ___ Very Shallow Dark Surface (TF12)
- ___ Other (explain in remarks)

*Indicators of hydrophytic vegetation and weltand hydrology must be present, unless disturbed or problematic

Restrictive Layer (if observed):

Type: _____

Depth (inches): _____

Hydric soil present? N

Remarks:

HYDROLOGY

Wetland Hydrology Indicators:

Primary Indicators (minimum of one is required; check all that apply)

- ___ Surface Water (A1)
- ___ High Water Table (A2)
- ___ Saturation (A3)
- ___ Water Marks (B1)
- ___ Sediment Deposits (B2)
- ___ Drift Deposits (B3)
- ___ Algal Mat or Crust (B4)
- ___ Iron Deposits (B5)
- ___ Inundation Visible on Aerial Imagery (B7)
- ___ Sparsely Vegetated Concave Surface (B8)
- ___ Water-Stained Leaves (B9)
- ___ Aquatic Fauna (B13)
- ___ True Aquatic Plants (B14)
- ___ Hydrogen Sulfide Odor (C1)
- ___ Oxidized Rhizospheres on Living Roots (C3)
- ___ Presence of Reduced Iron (C4)
- ___ Recent Iron Reduction in Tilled Soils (C6)
- ___ Thin Muck Surface (C7)
- ___ Gauge or Well Data (D9)
- ___ Other (Explain in Remarks)

Secondary Indicators (minimum of two required)

- ___ Surface Soil Cracks (B6)
- ___ Drainage Patterns (B10)
- ___ Dry-Season Water Table (C2)
- ___ Crayfish Burrows (C8)
- ___ Saturation Visible on Aerial Imagery (C9)
- ___ Stunted or Stressed Plants (D1)
- ___ Geomorphic Position (D2)
- ___ FAC-Neutral Test (D5)

Field Observations:

Surface water present?	Yes		No	X	Depth (inches):	
Water table present?	Yes	X	No		Depth (inches):	20
Saturation present? (includes capillary fringe)	Yes	X	No		Depth (inches):	16

Indicators of wetland hydrology present? N

Describe recorded data (stream gauge, monitoring well, aerial photos, previous inspections), if available:

Remarks:

WETLAND DETERMINATION DATA FORM - Midwest Region

Project/Site: Crow River Heights West | City/County: Hanover/Wright | Sampling Date: 5/3/2017

Applicant/Owner: Dennis Backes | State: MN | Sampling Point: SP1-1W

Investigator(s): B.Carlson, A.Krinke, A.Cameron | Section, Township, Range: S:34 T:120N R:24W

Landform (hillslope, terrace, etc.): Depression | Local relief (concave, convex, none): Concave

Slope (%): 0 - 2 | Lat: | Long: | Datum:

Soil Map Unit Name: Angus-Cordova Complex (Partially Hydric) | NWI Classification: PEM1A

Are climatic/hydrologic conditions of the site typical for this time of the year? Y (If no, explain in remarks)

Are vegetation ____, soil ____, or hydrology ____ significantly disturbed?

Are vegetation ____, soil ____, or hydrology ____ naturally problematic?

Are "normal circumstances" present? Yes

SUMMARY OF FINDINGS

(If needed, explain any answers in remarks.)

Hydrophytic vegetation present?	Y	**Is the sampled area within a wetland?**	Y
Hydric soil present?	Y	If yes, optional wetland site ID:	Wetland 1
Indicators of wetland hydrology present?	Y		

Remarks: (Explain alternative procedures here or in a separate report.)

Precipitation from Gridded Database Method within normal range. 30-day precipitation rolling total wetter than typical.

VEGETATION -- Use scientific names of plants.

Tree Stratum (Plot size: 30 ft Radius)	Absolute % Cover	Dominant Species	Indicator Staus
1 *Acer saccharinum*	25	Y	FACW
2 *Fraxinus pennsylvanica*	25	Y	FACW
3			
4			
5			
	50 = Total Cover		

Sapling/Shrub stratum (Plot size: 15 ft Radius)			
1 *Rhamnus cathartica*	10	Y	FAC
2			
3			
4			
5			
	10 = Total Cover		

Herb stratum (Plot size: 5 ft Radius)			
1 *Phalaris arundinacea*	10	Y	FACW
2 *Carex stricta*	10	Y	OBL
3			
4			
5			
6			
7			
8			
9			
10			
	20 = Total Cover		

Woody vine stratum (Plot size: 30 ft Radius)			
1			
2			
	0 = Total Cover		

Dominance Test Worksheet

Number of Dominant Species that are OBL, FACW, or FAC: 5 (A)

Total Number of Dominant Species Across all Strata: 5 (B)

Percent of Dominant Species that are OBL, FACW, or FAC: 100.00% (A/B)

Prevalence Index Worksheet

Total % Cover of:

OBL species	10	x 1 =	10	
FACW species	60	x 2 =	120	
FAC species	10	x 3 =	30	
FACU species	0	x 4 =	0	
UPL species	0	x 5 =	0	
Column totals	80	(A)	160	(B)

Prevalence Index = B/A = 2.00

Hydrophytic Vegetation Indicators:

- ___ Rapid test for hydrophytic vegetation
- X Dominance test is >50%
- X Prevalence index is ≤3.0*
- ___ Morphogical adaptations* (provide supporting data in Remarks or on a separate sheet)
- ___ Problematic hydrophytic vegetation* (explain)

*Indicators of hydric soil and wetland hydrology must be present, unless disturbed or problematic

Hydrophytic vegetation present? Y

Remarks: (Include photo numbers here or on a separate sheet)

SOIL

Sampling Point: SP1-1W

Profile Description: (Describe to the depth needed to document the indicator or confirm the absence of indicators.)

Depth (Inches)	Matrix Color (moist)	Matrix %	Redox Features Color (moist)	Redox %	Type*	Loc**	Texture	Remarks
0-20	10YR 2/1	100					Clay Loam	
20-24	10YR 4/2	95	10YR 4/6	5	C	M	Clay Loam	

*Type: C = Concentration, D = Depletion, RM = Reduced Matrix, MS = Masked Sand Grains. **Location: PL = Pore Lining, M = Matrix

Hydric Soil Indicators:

- ___ Histisol (A1)
- ___ Histic Epipedon (A2)
- ___ Black Histic (A3)
- ___ Hydrogen Sulfide (A4)
- ___ Stratified Layers (A5)
- ___ 2 cm Muck (A10)
- ___ Depleted Below Dark Surface (A11)
- X Thick Dark Surface (A12)
- ___ Sandy Mucky Mineral (S1)
- ___ 5 cm Mucky Peat or Peat (S3)
- ___ Sandy Gleyed Matrix (S4)
- ___ Sandy Redox (S5)
- ___ Stripped Matrix (S6)
- ___ Loamy Mucky Mineral (F1)
- ___ Loamy Gleyed Matrix (F2)
- ___ Depleted Matrix (F3)
- ___ Redox Dark Surface (F6)
- ___ Depleted Dark Surface (F7)
- ___ Redox Depressions (F8)

Indicators for Problematic Hydric Soils:

- ___ Coast Prairie Redox (A16) (**LRR K, L, R**)
- ___ Dark Surface (S7) (**LRR K, L)**
- ___ Iron-Manganese Masses (F12) (**LRR K, L, R**)
- ___ Very Shallow Dark Surface (TF12)
- ___ Other (explain in remarks)

*Indicators of hydrophytic vegetation and weltand hydrology must be present, unless disturbed or problematic

Restrictive Layer (if observed):

Type: _____

Depth (inches): _____

Hydric soil present? Y

Remarks:

HYDROLOGY

Wetland Hydrology Indicators:

Primary Indicators (minimum of one is required; check all that apply)

- X Surface Water (A1)
- X High Water Table (A2)
- X Saturation (A3)
- ___ Water Marks (B1)
- ___ Sediment Deposits (B2)
- ___ Drift Deposits (B3)
- ___ Algal Mat or Crust (B4)
- ___ Iron Deposits (B5)
- ___ Inundation Visible on Aerial Imagery (B7)
- ___ Sparsely Vegetated Concave Surface (B8)
- ___ Water-Stained Leaves (B9)
- ___ Aquatic Fauna (B13)
- ___ True Aquatic Plants (B14)
- ___ Hydrogen Sulfide Odor (C1)
- ___ Oxidized Rhizospheres on Living Roots (C3)
- ___ Presence of Reduced Iron (C4)
- ___ Recent Iron Reduction in Tilled Soils (C6)
- ___ Thin Muck Surface (C7)
- ___ Gauge or Well Data (D9)
- ___ Other (Explain in Remarks)

Secondary Indicators (minimum of two required)

- ___ Surface Soil Cracks (B6)
- ___ Drainage Patterns (B10)
- ___ Dry-Season Water Table (C2)
- ___ Crayfish Burrows (C8)
- ___ Saturation Visible on Aerial Imagery (C9)
- ___ Stunted or Stressed Plants (D1)
- X Geomorphic Position (D2)
- X FAC-Neutral Test (D5)

Field Observations:

Surface water present?	Yes	X	No	___	Depth (inches):	2
Water table present?	Yes	X	No	___	Depth (inches):	2
Saturation present? (includes capillary fringe)	Yes	X	No	___	Depth (inches):	Surface

Indicators of wetland hydrology present? Y

Describe recorded data (stream gauge, monitoring well, aerial photos, previous inspections), if available:

Remarks:

WETLAND DETERMINATION DATA FORM - Midwest Region

Project/Site: Crow River Heights West | City/County: Hanover/Wright | Sampling Date: 5/3/2017

Applicant/Owner: Dennis Backes | State: MN | Sampling Point: SP2-1U

Investigator(s): B.Carlson, A.Krinke, A.Cameron | Section, Township, Range: S:34 T:120N R:24W

Landform (hillslope, terrace, etc.): Hillslope | Local relief (concave, convex, none): Linear

Slope (%): 4 - 6 | Lat: | Long: | Datum:

Soil Map Unit Name: Angus-Le Sueur Complex (Predominantly Non-Hydric) | NWI Classification: None

Are climatic/hydrologic conditions of the site typical for this time of the year? Y (If no, explain in remarks)

Are vegetation ____, soil X, or hydrology ____ significantly disturbed? Are "normal circumstances" present? No

Are vegetation ____, soil ____, or hydrology ____ naturally problematic?

SUMMARY OF FINDINGS

(If needed, explain any answers in remarks.)

Hydrophytic vegetation present?	N	**Is the sampled area within a wetland?**	N
Hydric soil present?	N		
Indicators of wetland hydrology present?	N	If yes, optional wetland site ID:	

Remarks: (Explain alternative procedures here or in a separate report.)

Precipitation from Gridded Database Method within normal range. 30-day precipitation rolling total wetter than typical. Soils in this location were disturbed due to previous grading of the site.

VEGETATION -- Use scientific names of plants.

Tree Stratum (Plot size: 30 ft Radius)	Absolute % Cover	Dominant Species	Indicator Staus
1			
2			
3			
4			
5			
	0	= Total Cover	

Sapling/Shrub stratum (Plot size: 15 ft Radius)			
1			
2			
3			
4			
5			
	0	= Total Cover	

Herb stratum (Plot size: 5 ft Radius)			
1 *Bromus inermis*	100	Y	FACU
2			
3			
4			
5			
6			
7			
8			
9			
10			
	100	= Total Cover	

Woody vine stratum (Plot size: 30 ft Radius)			
1			
2			
	0	= Total Cover	

Dominance Test Worksheet

Number of Dominant Species that are OBL, FACW, or FAC: 0 (A)

Total Number of Dominant Species Across all Strata: 1 (B)

Percent of Dominant Species that are OBL, FACW, or FAC: 0.00% (A/B)

Prevalence Index Worksheet

Total % Cover of:

OBL species	0	x 1 =	0	
FACW species	0	x 2 =	0	
FAC species	0	x 3 =	0	
FACU species	100	x 4 =	400	
UPL species	0	x 5 =	0	
Column totals	100	(A)	400	(B)

Prevalence Index = B/A = 4.00

Hydrophytic Vegetation Indicators:

- ___ Rapid test for hydrophytic vegetation
- ___ Dominance test is >50%
- ___ Prevalence index is ≤3.0*
- ___ Morphogical adaptations* (provide supporting data in Remarks or on a separate sheet)
- ___ Problematic hydrophytic vegetation* (explain)

*Indicators of hydric soil and wetland hydrology must be present, unless disturbed or problematic

Hydrophytic vegetation present? N

Remarks: (Include photo numbers here or on a separate sheet)

SOIL

Sampling Point: SP2-1U

Profile Description: (Describe to the depth needed to document the indicator or confirm the absence of indicators.)

Depth (Inches)	Matrix Color (moist)	Matrix %	Redox Features Color (moist)	Redox %	Type*	Loc**	Texture	Remarks
0-16	10YR 2/1	100					Clay Loam	
16-24	10YR 4/3	98	10YR 4/6	2	C	M	Sandy Clay Loam	

*Type: C = Concentration, D = Depletion, RM = Reduced Matrix, MS = Masked Sand Grains. **Location: PL = Pore Lining, M = Matrix

Hydric Soil Indicators:

- ___ Histisol (A1)
- ___ Histic Epipedon (A2)
- ___ Black Histic (A3)
- ___ Hydrogen Sulfide (A4)
- ___ Stratified Layers (A5)
- ___ 2 cm Muck (A10)
- ___ Depleted Below Dark Surface (A11)
- ___ Thick Dark Surface (A12)
- ___ Sandy Mucky Mineral (S1)
- ___ 5 cm Mucky Peat or Peat (S3)
- ___ Sandy Gleyed Matrix (S4)
- ___ Sandy Redox (S5)
- ___ Stripped Matrix (S6)
- ___ Loamy Mucky Mineral (F1)
- ___ Loamy Gleyed Matrix (F2)
- ___ Depleted Matrix (F3)
- ___ Redox Dark Surface (F6)
- ___ Depleted Dark Surface (F7)
- ___ Redox Depressions (F8)

Indicators for Problematic Hydric Soils:

- ___ Coast Prairie Redox (A16) (**LRR K, L, R**)
- ___ Dark Surface (S7) (**LRR K, L)**
- ___ Iron-Manganese Masses (F12) (**LRR K, L, R**)
- ___ Very Shallow Dark Surface (TF12)
- ___ Other (explain in remarks)

*Indicators of hydrophytic vegetation and weltand hydrology must be present, unless disturbed or problematic

Restrictive Layer (if observed):

Type: _____

Depth (inches): _____

Hydric soil present? N

Remarks:

Soils in this location were disturbed due to previous grading of the site.

HYDROLOGY

Wetland Hydrology Indicators:

Primary Indicators (minimum of one is required; check all that apply)

- ___ Surface Water (A1)
- ___ High Water Table (A2)
- ___ Saturation (A3)
- ___ Water Marks (B1)
- ___ Sediment Deposits (B2)
- ___ Drift Deposits (B3)
- ___ Algal Mat or Crust (B4)
- ___ Iron Deposits (B5)
- ___ Inundation Visible on Aerial Imagery (B7)
- ___ Sparsely Vegetated Concave Surface (B8)
- ___ Water-Stained Leaves (B9)
- ___ Aquatic Fauna (B13)
- ___ True Aquatic Plants (B14)
- ___ Hydrogen Sulfide Odor (C1)
- ___ Oxidized Rhizospheres on Living Roots (C3)
- ___ Presence of Reduced Iron (C4)
- ___ Recent Iron Reduction in Tilled Soils (C6)
- ___ Thin Muck Surface (C7)
- ___ Gauge or Well Data (D9)
- ___ Other (Explain in Remarks)

Secondary Indicators (minimum of two required)

- ___ Surface Soil Cracks (B6)
- ___ Drainage Patterns (B10)
- ___ Dry-Season Water Table (C2)
- ___ Crayfish Burrows (C8)
- ___ Saturation Visible on Aerial Imagery (C9)
- ___ Stunted or Stressed Plants (D1)
- ___ Geomorphic Position (D2)
- ___ FAC-Neutral Test (D5)

Field Observations:

Surface water present?	Yes	___	No	X	Depth (inches):	___
Water table present?	Yes	___	No	X	Depth (inches):	___
Saturation present? (includes capillary fringe)	Yes	___	No	X	Depth (inches):	___

Indicators of wetland hydrology present? N

Describe recorded data (stream gauge, monitoring well, aerial photos, previous inspections), if available:

Remarks:

WETLAND DETERMINATION DATA FORM - Midwest Region

Project/Site: Crow River Heights West | City/County: Hanover/Wright | Sampling Date: 5/3/2017

Applicant/Owner: Dennis Backes | State: MN | Sampling Point: SP2-1W

Investigator(s): B.Carlson, A.Krinke, A.Cameron | Section, Township, Range: S:34 T:120N R:24W

Landform (hillslope, terrace, etc.): Depression | Local relief (concave, convex, none): Concave

Slope (%): 0 - 2 | Lat: | Long: | Datum:

Soil Map Unit Name: Angus-Le Sueur Complex (Predominantly Non-Hydric) | NWI Classification: PEM1C

Are climatic/hydrologic conditions of the site typical for this time of the year? Y (If no, explain in remarks)

Are vegetation X, soil X, or hydrology X significantly disturbed?

Are vegetation ____, soil ____, or hydrology ____ naturally problematic?

Are "normal circumstances" present? No

SUMMARY OF FINDINGS

(If needed, explain any answers in remarks.)

Hydrophytic vegetation present?	Y	**Is the sampled area within a wetland?**	Y
Hydric soil present?	Y		
Indicators of wetland hydrology present?	Y	f yes, optional wetland site ID:	Wetland 2

Remarks: (Explain alternative procedures here or in a separate report.)

Precipitation from Gridded Database Method within normal range. 30-day precipitation rolling total wetter than typical. This area had been excavated in historic upland, therefore vegetation, soils, and hydrology were significantly disturbed.

VEGETATION -- Use scientific names of plants.

Tree Stratum (Plot size: 30 ft Radius)	Absolute % Cover	Dominant Species	Indicator Staus
1			
2			
3			
4			
5			
	0	= Total Cover	

Sapling/Shrub stratum (Plot size: 15 ft Radius)			
1 *Salix amygdaloides*	20	Y	FACW
2			
3			
4			
5			
	20	= Total Cover	

Herb stratum (Plot size: 5 ft Radius)			
1 *Typha angustifolia*	100	Y	OBL
2			
3			
4			
5			
6			
7			
8			
9			
10			
	100	= Total Cover	

Woody vine stratum (Plot size: 30 ft Radius)			
1			
2			
	0	= Total Cover	

Dominance Test Worksheet

Number of Dominant Species that are OBL, FACW, or FAC: 2 (A)

Total Number of Dominant Species Across all Strata: 2 (B)

Percent of Dominant Species that are OBL, FACW, or FAC: 100.00% (A/B)

Prevalence Index Worksheet

Total % Cover of:

OBL species	100	x 1 =	100	
FACW species	20	x 2 =	40	
FAC species	0	x 3 =	0	
FACU species	0	x 4 =	0	
UPL species	0	x 5 =	0	
Column totals	120	(A)	140	(B)

Prevalence Index = B/A = 1.17

Hydrophytic Vegetation Indicators:

- ___ Rapid test for hydrophytic vegetation
- X Dominance test is >50%
- X Prevalence index is ≤3.0*
- ___ Morphogical adaptations* (provide supporting data in Remarks or on a separate sheet)
- ___ Problematic hydrophytic vegetation* (explain)

*Indicators of hydric soil and wetland hydrology must be present, unless disturbed or problematic

Hydrophytic vegetation present? Y

Remarks: (Include photo numbers here or on a separate sheet)

SOIL

Sampling Point: SP2-1W

Profile Description: (Describe to the depth needed to document the indicator or confirm the absence of indicators.)

Depth (Inches)	Matrix Color (moist)	Matrix %	Redox Features Color (moist)	Redox %	Type*	Loc**	Texture	Remarks
0-12	10YR 2/1	100					Mucky Loam	

*Type: C = Concentration, D = Depletion, RM = Reduced Matrix, MS = Masked Sand Grains. **Location: PL = Pore Lining, M = Matrix

Hydric Soil Indicators:

- ___ Histisol (A1)
- ___ Histic Epipedon (A2)
- ___ Black Histic (A3)
- ___ Hydrogen Sulfide (A4)
- ___ Stratified Layers (A5)
- ___ 2 cm Muck (A10)
- ___ Depleted Below Dark Surface (A11)
- ___ Thick Dark Surface (A12)
- ___ Sandy Mucky Mineral (S1)
- ___ 5 cm Mucky Peat or Peat (S3)
- ___ Sandy Gleyed Matrix (S4)
- ___ Sandy Redox (S5)
- ___ Stripped Matrix (S6)
- X Loamy Mucky Mineral (F1)
- ___ Loamy Gleyed Matrix (F2)
- ___ Depleted Matrix (F3)
- ___ Redox Dark Surface (F6)
- ___ Depleted Dark Surface (F7)
- ___ Redox Depressions (F8)

Indicators for Problematic Hydric Soils:

- ___ Coast Prairie Redox (A16) (**LRR K, L, R**)
- ___ Dark Surface (S7) (**LRR K, L)**
- ___ Iron-Manganese Masses (F12) (**LRR K, L, R**)
- ___ Very Shallow Dark Surface (TF12)
- ___ Other (explain in remarks)

*Indicators of hydrophytic vegetation and weltand hydrology must be present, unless disturbed or problematic

Restrictive Layer (if observed):

Type: _____

Depth (inches): _____

Hydric soil present? Y

Remarks:

HYDROLOGY

Wetland Hydrology Indicators:

Primary Indicators (minimum of one is required; check all that apply)

- X Surface Water (A1)
- X High Water Table (A2)
- X Saturation (A3)
- ___ Water Marks (B1)
- ___ Sediment Deposits (B2)
- ___ Drift Deposits (B3)
- ___ Algal Mat or Crust (B4)
- ___ Iron Deposits (B5)
- ___ Inundation Visible on Aerial Imagery (B7)
- ___ Sparsely Vegetated Concave Surface (B8)
- ___ Water-Stained Leaves (B9)
- ___ Aquatic Fauna (B13)
- ___ True Aquatic Plants (B14)
- ___ Hydrogen Sulfide Odor (C1)
- ___ Oxidized Rhizospheres on Living Roots (C3)
- ___ Presence of Reduced Iron (C4)
- ___ Recent Iron Reduction in Tilled Soils (C6)
- ___ Thin Muck Surface (C7)
- ___ Gauge or Well Data (D9)
- ___ Other (Explain in Remarks)

Secondary Indicators (minimum of two required)

- ___ Surface Soil Cracks (B6)
- ___ Drainage Patterns (B10)
- ___ Dry-Season Water Table (C2)
- ___ Crayfish Burrows (C8)
- ___ Saturation Visible on Aerial Imagery (C9)
- ___ Stunted or Stressed Plants (D1)
- X Geomorphic Position (D2)
- X FAC-Neutral Test (D5)

Field Observations:

Surface water present?	Yes	X	No	___	Depth (inches):	3
Water table present?	Yes	X	No	___	Depth (inches):	3
Saturation present? (includes capillary fringe)	Yes	X	No	___	Depth (inches):	Surface

Indicators of wetland hydrology present? Y

Describe recorded data (stream gauge, monitoring well, aerial photos, previous inspections), if available:

Remarks:

WETLAND DETERMINATION DATA FORM - Midwest Region

Project/Site: Crow River Heights West | City/County: Hanover/Wright | Sampling Date: 5/3/2017

Applicant/Owner: Dennis Backes | State: MN | Sampling Point: SP2-2U

Investigator(s): B.Carlson, A.Krinke, A.Cameron | Section, Township, Range: S:34 T:120N R:24W

Landform (hillslope, terrace, etc.): Hillslope | Local relief (concave, convex, none): Linear

Slope (%): 3 - 5 | Lat: | Long: | Datum:

Soil Map Unit Name: Angus-Cordova Complex (Partially Hydric) | NWI Classification: None

Are climatic/hydrologic conditions of the site typical for this time of the year? Y (If no, explain in remarks)

Are vegetation ____, soil ____, or hydrology ____ significantly disturbed?

Are vegetation ____, soil ____, or hydrology ____ naturally problematic?

Are "normal circumstances" present? Yes

SUMMARY OF FINDINGS

(If needed, explain any answers in remarks.)

Hydrophytic vegetation present?	N	**Is the sampled area within a wetland?**	N
Hydric soil present?	N		
Indicators of wetland hydrology present?	N	If yes, optional wetland site ID:	

Remarks: (Explain alternative procedures here or in a separate report.)

Precipitation from Gridded Database Method within normal range. 30-day precipitation rolling total wetter than typical.

VEGETATION -- Use scientific names of plants.

Tree Stratum (Plot size: 30 ft Radius)	Absolute % Cover	Dominant Species	Indicator Staus
1 *Juniperus virginiana*	15	Y	FACU
2			
3			
4			
5			
	15 = Total Cover		

Sapling/Shrub stratum (Plot size: 15 ft Radius)			
1 *Zanthoxylum americanum*	35	Y	FACU
2 *Prunus virginiana*	15	Y	FACU
3 *Rhamnus cathartica*	15	Y	FAC
4			
5			
	65 = Total Cover		

Herb stratum (Plot size: 5 ft Radius)			
1 *Bromus inermis*	70	Y	FACU
2 *Fragaria virginiana*	20	Y	FACU
3 *Viola sororia*	10	N	FAC
4			
5			
6			
7			
8			
9			
10			
	100 = Total Cover		

Woody vine stratum (Plot size: 30 ft Radius)			
1			
2			
	0 = Total Cover		

Dominance Test Worksheet

Number of Dominant Species that are OBL, FACW, or FAC: 1 (A)

Total Number of Dominant Species Across all Strata: 6 (B)

Percent of Dominant Species that are OBL, FACW, or FAC: 16.67% (A/B)

Prevalence Index Worksheet

Total % Cover of:

OBL species	0	x 1 =	0	
FACW species	0	x 2 =	0	
FAC species	25	x 3 =	75	
FACU species	155	x 4 =	620	
UPL species	0	x 5 =	0	
Column totals	180	(A)	695	(B)

Prevalence Index = B/A = 3.86

Hydrophytic Vegetation Indicators:

- ___ Rapid test for hydrophytic vegetation
- ___ Dominance test is >50%
- ___ Prevalence index is ≤3.0*
- ___ Morphogical adaptations* (provide supporting data in Remarks or on a separate sheet)
- ___ Problematic hydrophytic vegetation* (explain)

*Indicators of hydric soil and wetland hydrology must be present, unless disturbed or problematic

Hydrophytic vegetation present? N

Remarks: (Include photo numbers here or on a separate sheet)

SOIL

Sampling Point: SP2-2U

Profile Description: (Describe to the depth needed to document the indicator or confirm the absence of indicators.)

Depth (Inches)	Matrix Color (moist)	Matrix %	Redox Features Color (moist)	Redox %	Type*	Loc**	Texture	Remarks
0-13	10YR 3/2	100					Loam	
13-15	10YR 4/3	100					Loam	
15-24	10YR 4/3	100					Clay Loam	
24-28	10YR 4/2	90	10YR 4/6	10	C	M	Clay Loam	

*Type: C = Concentration, D = Depletion, RM = Reduced Matrix, MS = Masked Sand Grains. **Location: PL = Pore Lining, M = Matrix

Hydric Soil Indicators:

___ Histisol (A1)
___ Histic Epipedon (A2)
___ Black Histic (A3)
___ Hydrogen Sulfide (A4)
___ Stratified Layers (A5)
___ 2 cm Muck (A10)
___ Depleted Below Dark Surface (A11)
___ Thick Dark Surface (A12)
___ Sandy Mucky Mineral (S1)
___ 5 cm Mucky Peat or Peat (S3)
___ Sandy Gleyed Matrix (S4)
___ Sandy Redox (S5)
___ Stripped Matrix (S6)
___ Loamy Mucky Mineral (F1)
___ Loamy Gleyed Matrix (F2)
___ Depleted Matrix (F3)
___ Redox Dark Surface (F6)
___ Depleted Dark Surface (F7)
___ Redox Depressions (F8)

Indicators for Problematic Hydric Soils:

___ Coast Prairie Redox (A16) (**LRR K, L, R**)
___ Dark Surface (S7) (**LRR K, L)**
___ Iron-Manganese Masses (F12) (**LRR K, L, R**)
___ Very Shallow Dark Surface (TF12)
___ Other (explain in remarks)

*Indicators of hydrophytic vegetation and weltand hydrology must be present, unless disturbed or problematic

Restrictive Layer (if observed):
Type: _____
Depth (inches): _____

Hydric soil present? N

Remarks:

HYDROLOGY

Wetland Hydrology Indicators:

Primary Indicators (minimum of one is required; check all that apply)

___ Surface Water (A1)
___ High Water Table (A2)
___ Saturation (A3)
___ Water Marks (B1)
___ Sediment Deposits (B2)
___ Drift Deposits (B3)
___ Algal Mat or Crust (B4)
___ Iron Deposits (B5)
___ Inundation Visible on Aerial Imagery (B7)
___ Sparsely Vegetated Concave Surface (B8)
___ Water-Stained Leaves (B9)
___ Aquatic Fauna (B13)
___ True Aquatic Plants (B14)
___ Hydrogen Sulfide Odor (C1)
___ Oxidized Rhizospheres on Living Roots (C3)
___ Presence of Reduced Iron (C4)
___ Recent Iron Reduction in Tilled Soils (C6)
___ Thin Muck Surface (C7)
___ Gauge or Well Data (D9)
___ Other (Explain in Remarks)

Secondary Indicators (minimum of two required)

___ Surface Soil Cracks (B6)
___ Drainage Patterns (B10)
___ Dry-Season Water Table (C2)
___ Crayfish Burrows (C8)
___ Saturation Visible on Aerial Imagery (C9)
___ Stunted or Stressed Plants (D1)
___ Geomorphic Position (D2)
___ FAC-Neutral Test (D5)

Field Observations:

Surface water present?	Yes	___	No	X	Depth (inches):	___
Water table present?	Yes	___	No	X	Depth (inches):	___
Saturation present? (includes capillary fringe)	Yes	___	No	X	Depth (inches):	___

Indicators of wetland hydrology present? N

Describe recorded data (stream gauge, monitoring well, aerial photos, previous inspections), if available:

Remarks:

WETLAND DETERMINATION DATA FORM - Midwest Region

Project/Site: Crow River Heights West | City/County: Hanover/Wright | Sampling Date: 5/3/2017

Applicant/Owner: Dennis Backes | State: MN | Sampling Point: SP2-2W

Investigator(s): B.Carlson, A.Krinke, A.Cameron | Section, Township, Range: S:34 T:120N R:24W

Landform (hillslope, terrace, etc.): Depression | Local relief (concave, convex, none): Concave

Slope (%): 0 - 2 | Lat: | Long: | Datum:

Soil Map Unit Name: Angus-Cordova Complex (Partially Hydric) | NWI Classification: PEM1A

Are climatic/hydrologic conditions of the site typical for this time of the year? Y (If no, explain in remarks)

Are vegetation ____, soil ____, or hydrology X significantly disturbed?

Are vegetation ____, soil ____, or hydrology ____ naturally problematic?

Are "normal circumstances" present? No

SUMMARY OF FINDINGS

(If needed, explain any answers in remarks.)

Hydrophytic vegetation present?	Y	**Is the sampled area within a wetland?**	Y
Hydric soil present?	Y		
Indicators of wetland hydrology present?	Y	If yes, optional wetland site ID:	Wetland 2

Remarks: (Explain alternative procedures here or in a separate report.)

Precipitation from Gridded Database Method within normal range. 30-day precipitation rolling total wetter than typical. Hydrology in this area had been disturbed due to adjacent grading of the site.

VEGETATION -- Use scientific names of plants.

Tree Stratum (Plot size: 30 ft Radius)	Absolute % Cover	Dominant Species	Indicator Staus
1 *Ulmus americana*	15	Y	FACW
2			
3			
4			
5			
	15 = Total Cover		

Sapling/Shrub stratum (Plot size: 15 ft Radius)			
1			
2			
3			
4			
5			
	0 = Total Cover		

Herb stratum (Plot size: 5 ft Radius)			
1 *Phalaris arundinacea*	100	Y	FACW
2			
3			
4			
5			
6			
7			
8			
9			
10			
	100 = Total Cover		

Woody vine stratum (Plot size: 30 ft Radius)			
1			
2			
	0 = Total Cover		

Dominance Test Worksheet

Number of Dominant Species that are OBL, FACW, or FAC: 2 (A)

Total Number of Dominant Species Across all Strata: 2 (B)

Percent of Dominant Species that are OBL, FACW, or FAC: 100.00% (A/B)

Prevalence Index Worksheet

Total % Cover of:

OBL species	0	x 1 =	0
FACW species	115	x 2 =	230
FAC species	0	x 3 =	0
FACU species	0	x 4 =	0
UPL species	0	x 5 =	0
Column totals	115 (A)		230 (B)

Prevalence Index = B/A = 2.00

Hydrophytic Vegetation Indicators:

- ___ Rapid test for hydrophytic vegetation
- X Dominance test is >50%
- X Prevalence index is ≤3.0*
- ___ Morphogical adaptations* (provide supporting data in Remarks or on a separate sheet)
- ___ Problematic hydrophytic vegetation* (explain)

*Indicators of hydric soil and wetland hydrology must be present, unless disturbed or problematic

Hydrophytic vegetation present? Y

Remarks: (Include photo numbers here or on a separate sheet)

SOIL

Sampling Point: SP2-2W

Profile Description: (Describe to the depth needed to document the indicator or confirm the absence of indicators.)

Depth (Inches)	Matrix Color (moist)	Matrix %	Redox Features Color (moist)	Redox %	Type*	Loc**	Texture	Remarks
0-8	10YR 2/1	90	10YR 4/6	10	C	M	Mucky Loam	
8-11	10YR 4/1	90	10YR 4/6	10	C	M	Loam	
11-24	10YR 4/1	90	10YR 4/6	10	C	M	Clay Loam	

*Type: C = Concentration, D = Depletion, RM = Reduced Matrix, MS = Masked Sand Grains. **Location: PL = Pore Lining, M = Matrix

Hydric Soil Indicators:

- ___ Histisol (A1)
- ___ Histic Epipedon (A2)
- ___ Black Histic (A3)
- ___ Hydrogen Sulfide (A4)
- ___ Stratified Layers (A5)
- ___ 2 cm Muck (A10)
- X Depleted Below Dark Surface (A11)
- ___ Thick Dark Surface (A12)
- ___ Sandy Mucky Mineral (S1)
- ___ 5 cm Mucky Peat or Peat (S3)
- ___ Sandy Gleyed Matrix (S4)
- ___ Sandy Redox (S5)
- ___ Stripped Matrix (S6)
- ___ Loamy Mucky Mineral (F1)
- ___ Loamy Gleyed Matrix (F2)
- ___ Depleted Matrix (F3)
- ___ Redox Dark Surface (F6)
- ___ Depleted Dark Surface (F7)
- ___ Redox Depressions (F8)

Indicators for Problematic Hydric Soils:

- ___ Coast Prairie Redox (A16) (**LRR K, L, R**)
- ___ Dark Surface (S7) (**LRR K, L)**
- ___ Iron-Manganese Masses (F12) (**LRR K, L, R**)
- ___ Very Shallow Dark Surface (TF12)
- ___ Other (explain in remarks)

*Indicators of hydrophytic vegetation and weltand hydrology must be present, unless disturbed or problematic

Restrictive Layer (if observed):

Type: _____

Depth (inches): _____

Hydric soil present? Y

Remarks:

HYDROLOGY

Wetland Hydrology Indicators:

Primary Indicators (minimum of one is required; check all that apply)

- X Surface Water (A1)
- X High Water Table (A2)
- X Saturation (A3)
- ___ Water Marks (B1)
- ___ Sediment Deposits (B2)
- ___ Drift Deposits (B3)
- ___ Algal Mat or Crust (B4)
- ___ Iron Deposits (B5)
- ___ Inundation Visible on Aerial Imagery (B7)
- ___ Sparsely Vegetated Concave Surface (B8)
- ___ Water-Stained Leaves (B9)
- ___ Aquatic Fauna (B13)
- ___ True Aquatic Plants (B14)
- ___ Hydrogen Sulfide Odor (C1)
- ___ Oxidized Rhizospheres on Living Roots (C3)
- ___ Presence of Reduced Iron (C4)
- ___ Recent Iron Reduction in Tilled Soils (C6)
- ___ Thin Muck Surface (C7)
- ___ Gauge or Well Data (D9)
- ___ Other (Explain in Remarks)

Secondary Indicators (minimum of two required)

- ___ Surface Soil Cracks (B6)
- ___ Drainage Patterns (B10)
- ___ Dry-Season Water Table (C2)
- ___ Crayfish Burrows (C8)
- ___ Saturation Visible on Aerial Imagery (C9)
- ___ Stunted or Stressed Plants (D1)
- X Geomorphic Position (D2)
- X FAC-Neutral Test (D5)

Field Observations:

Surface water present?	Yes	X	No	___	Depth (inches):	2
Water table present?	Yes	X	No	___	Depth (inches):	2
Saturation present? (includes capillary fringe)	Yes	X	No	___	Depth (inches):	Surface

Indicators of wetland hydrology present? Y

Describe recorded data (stream gauge, monitoring well, aerial photos, previous inspections), if available:

Remarks:

WETLAND DETERMINATION DATA FORM - Midwest Region

Project/Site: Crow River Heights West | City/County: Hanover/Wright | Sampling Date: 5/3/2017

Applicant/Owner: Dennis Backes | State: MN | Sampling Point: SP2-3U

Investigator(s): B.Carlson, A.Krinke, A.Cameron | Section, Township, Range: S:34 T:120N R:24W

Landform (hillslope, terrace, etc.): Hillslope | Local relief (concave, convex, none): Linear

Slope (%): 3 - 5 | Lat: | Long: | Datum:

Soil Map Unit Name: Angus-Cordova Complex (Partially Hydric) | NWI Classification: None

Are climatic/hydrologic conditions of the site typical for this time of the year? Y (If no, explain in remarks)

Are vegetation ____, soil ____, or hydrology ____ significantly disturbed?

Are vegetation ____, soil ____, or hydrology ____ naturally problematic?

Are "normal circumstances" present? Yes

SUMMARY OF FINDINGS

(If needed, explain any answers in remarks.)

Hydrophytic vegetation present?	Y	**Is the sampled area within a wetland?**	N
Hydric soil present?	Y		
Indicators of wetland hydrology present?	N	If yes, optional wetland site ID:	

Remarks: (Explain alternative procedures here or in a separate report.)

Precipitation from Gridded Database Method within normal range. 30-day precipitation rolling total wetter than typical.

VEGETATION -- Use scientific names of plants.

Tree Stratum (Plot size: 30 ft Radius)	Absolute % Cover	Dominant Species	Indicator Staus
1			
2			
3			
4			
5			
	0	= Total Cover	

Sapling/Shrub stratum (Plot size: 15 ft Radius)	Absolute % Cover	Dominant Species	Indicator Staus
1 *Rhamnus cathartica*	10	Y	FAC
2			
3			
4			
5			
	10	= Total Cover	

Herb stratum (Plot size: 5 ft Radius)	Absolute % Cover	Dominant Species	Indicator Staus
1 *Poa pratensis*	70	Y	FAC
2 *Fragaria virginiana*	20	N	FACU
3 *Rubus idaeus*	10	N	FACU
4 *Solidago canadensis*	5	N	FACU
5			
6			
7			
8			
9			
10			
	105	= Total Cover	

Woody vine stratum (Plot size: 30 ft Radius)	Absolute % Cover	Dominant Species	Indicator Staus
1			
2			
	0	= Total Cover	

Dominance Test Worksheet

Number of Dominant Species that are OBL, FACW, or FAC: 2 (A)

Total Number of Dominant Species Across all Strata: 2 (B)

Percent of Dominant Species that are OBL, FACW, or FAC: 100.00% (A/B)

Prevalence Index Worksheet

Total % Cover of:

OBL species	0	x 1 =	0	
FACW species	0	x 2 =	0	
FAC species	80	x 3 =	240	
FACU species	35	x 4 =	140	
UPL species	0	x 5 =	0	
Column totals	115	(A)	380	(B)

Prevalence Index = B/A = 3.30

Hydrophytic Vegetation Indicators:

- ___ Rapid test for hydrophytic vegetation
- X Dominance test is >50%
- ___ Prevalence index is ≤3.0*
- ___ Morphogical adaptations* (provide supporting data in Remarks or on a separate sheet)
- ___ Problematic hydrophytic vegetation* (explain)

*Indicators of hydric soil and wetland hydrology must be present, unless disturbed or problematic

Hydrophytic vegetation present? Y

Remarks: (Include photo numbers here or on a separate sheet)

SOIL

Sampling Point: SP2-3U

Profile Description: (Describe to the depth needed to document the indicator or confirm the absence of indicators.)

Depth (Inches)	Matrix Color (moist)	Matrix %	Redox Features Color (moist)	Redox %	Type*	Loc**	Texture	Remarks
0-9	10YR 3/1	100					Clay Loam	
9-15	10YR 3/1	78	10YR 4/2	20	D	M	Clay Loam	
			10YR 4/6	2	C	M	Clay Loam	
15-24	10YR 3/1	75	2.5Y 5/2	20	D	M	Clay Loam	
			10YR 4/6	5	C	M	Clay Loam	

*Type: C = Concentration, D = Depletion, RM = Reduced Matrix, MS = Masked Sand Grains. **Location: PL = Pore Lining, M = Matrix

Hydric Soil Indicators:

- ___ Histisol (A1)
- ___ Histic Epipedon (A2)
- ___ Black Histic (A3)
- ___ Hydrogen Sulfide (A4)
- ___ Stratified Layers (A5)
- ___ 2 cm Muck (A10)
- X Depleted Below Dark Surface (A11)
- ___ Thick Dark Surface (A12)
- ___ Sandy Mucky Mineral (S1)
- ___ 5 cm Mucky Peat or Peat (S3)
- ___ Sandy Gleyed Matrix (S4)
- ___ Sandy Redox (S5)
- ___ Stripped Matrix (S6)
- ___ Loamy Mucky Mineral (F1)
- ___ Loamy Gleyed Matrix (F2)
- ___ Depleted Matrix (F3)
- ___ Redox Dark Surface (F6)
- ___ Depleted Dark Surface (F7)
- ___ Redox Depressions (F8)

Indicators for Problematic Hydric Soils:

- ___ Coast Prairie Redox (A16) (**LRR K, L, R**)
- ___ Dark Surface (S7) (**LRR K, L)**
- ___ Iron-Manganese Masses (F12) (**LRR K, L, R**)
- ___ Very Shallow Dark Surface (TF12)
- ___ Other (explain in remarks)

*Indicators of hydrophytic vegetation and weltand hydrology must be present, unless disturbed or problematic

Restrictive Layer (if observed):

Type: _____

Depth (inches): _____

Hydric soil present? Y

Remarks:

HYDROLOGY

Wetland Hydrology Indicators:

Primary Indicators (minimum of one is required; check all that apply)

- ___ Surface Water (A1)
- ___ High Water Table (A2)
- ___ Saturation (A3)
- ___ Water Marks (B1)
- ___ Sediment Deposits (B2)
- ___ Drift Deposits (B3)
- ___ Algal Mat or Crust (B4)
- ___ Iron Deposits (B5)
- ___ Inundation Visible on Aerial Imagery (B7)
- ___ Sparsely Vegetated Concave Surface (B8)
- ___ Water-Stained Leaves (B9)
- ___ Aquatic Fauna (B13)
- ___ True Aquatic Plants (B14)
- ___ Hydrogen Sulfide Odor (C1)
- ___ Oxidized Rhizospheres on Living Roots (C3)
- ___ Presence of Reduced Iron (C4)
- ___ Recent Iron Reduction in Tilled Soils (C6)
- ___ Thin Muck Surface (C7)
- ___ Gauge or Well Data (D9)
- ___ Other (Explain in Remarks)

Secondary Indicators (minimum of two required)

- ___ Surface Soil Cracks (B6)
- ___ Drainage Patterns (B10)
- ___ Dry-Season Water Table (C2)
- ___ Crayfish Burrows (C8)
- ___ Saturation Visible on Aerial Imagery (C9)
- ___ Stunted or Stressed Plants (D1)
- ___ Geomorphic Position (D2)
- ___ FAC-Neutral Test (D5)

Field Observations:

Surface water present?	Yes	___	No	X	Depth (inches): ___
Water table present?	Yes	___	No	X	Depth (inches): ___
Saturation present? (includes capillary fringe)	Yes	___	No	X	Depth (inches): ___

Indicators of wetland hydrology present? N

Describe recorded data (stream gauge, monitoring well, aerial photos, previous inspections), if available:

Remarks:

WETLAND DETERMINATION DATA FORM - Midwest Region

Project/Site: Crow River Heights West | City/County: Hanover/Wright | Sampling Date: 5/3/2017

Applicant/Owner: Dennis Backes | State: MN | Sampling Point: SP2-3W

Investigator(s): B.Carlson, A.Krinke, A.Cameron | Section, Township, Range: S:34 T:120N R:24W

Landform (hillslope, terrace, etc.): Depression | Local relief (concave, convex, none): Concave

Slope (%): 0 - 2 | Lat: | Long: | Datum:

Soil Map Unit Name: Angus-Cordova Complex (Partially Hydric) | NWI Classification: PEM1A

Are climatic/hydrologic conditions of the site typical for this time of the year? Y (If no, explain in remarks)

Are vegetation ____, soil ____, or hydrology X significantly disturbed?

Are vegetation ____, soil ____, or hydrology ____ naturally problematic?

Are "normal circumstances" present? No

SUMMARY OF FINDINGS

(If needed, explain any answers in remarks.)

Hydrophytic vegetation present?	Y	**Is the sampled area within a wetland?**	Y
Hydric soil present?	Y		
Indicators of wetland hydrology present?	Y	If yes, optional wetland site ID:	Wetland 2

Remarks: (Explain alternative procedures here or in a separate report.)

Precipitation from Gridded Database Method within normal range. 30-day precipitation rolling total wetter than typical. Hydrology in this area had been disturbed due to adjacent grading of the site.

VEGETATION -- Use scientific names of plants.

Tree Stratum (Plot size: 30 ft Radius)	Absolute % Cover	Dominant Species	Indicator Staus
1			
2			
3			
4			
5			
	0	= Total Cover	

Sapling/Shrub stratum (Plot size: 15 ft Radius)			
1			
2			
3			
4			
5			
	0	= Total Cover	

Herb stratum (Plot size: 5 ft Radius)			
1 *Phalaris arundinacea*	100	Y	FACW
2			
3			
4			
5			
6			
7			
8			
9			
10			
	100	= Total Cover	

Woody vine stratum (Plot size: 30 ft Radius)			
1			
2			
	0	= Total Cover	

Dominance Test Worksheet

Number of Dominant Species that are OBL, FACW, or FAC: 1 (A)

Total Number of Dominant Species Across all Strata: 1 (B)

Percent of Dominant Species that are OBL, FACW, or FAC: 100.00% (A/B)

Prevalence Index Worksheet

Total % Cover of:

OBL species	0	x 1 =	0	
FACW species	100	x 2 =	200	
FAC species	0	x 3 =	0	
FACU species	0	x 4 =	0	
UPL species	0	x 5 =	0	
Column totals	100	(A)	200	(B)

Prevalence Index = B/A = 2.00

Hydrophytic Vegetation Indicators:

- ___ Rapid test for hydrophytic vegetation
- X Dominance test is >50%
- X Prevalence index is ≤3.0*
- ___ Morphogical adaptations* (provide supporting data in Remarks or on a separate sheet)
- ___ Problematic hydrophytic vegetation* (explain)

*Indicators of hydric soil and wetland hydrology must be present, unless disturbed or problematic

Hydrophytic vegetation present? Y

Remarks: (Include photo numbers here or on a separate sheet)

SOIL

Sampling Point: SP2-3W

Profile Description: (Describe to the depth needed to document the indicator or confirm the absence of indicators.)

Depth (Inches)	Matrix Color (moist)	Matrix %	Redox Features Color (moist)	Redox %	Type*	Loc**	Texture	Remarks
0-4	10YR 4/2	90	10YR 4/6	10	C	M	Mucky Loam	
4-13	10YR 4/2	85	10YR 4/6	15	C	M	Sandy Clay Loam	
13-18	10YR 4/2	70	10YR 4/6	30	C	M	Sandy Clay Loam	

*Type: C = Concentration, D = Depletion, RM = Reduced Matrix, MS = Masked Sand Grains. **Location: PL = Pore Lining, M = Matrix

Hydric Soil Indicators:

- ___ Histisol (A1)
- ___ Histic Epipedon (A2)
- ___ Black Histic (A3)
- ___ Hydrogen Sulfide (A4)
- ___ Stratified Layers (A5)
- ___ 2 cm Muck (A10)
- ___ Depleted Below Dark Surface (A11)
- ___ Thick Dark Surface (A12)
- ___ Sandy Mucky Mineral (S1)
- ___ 5 cm Mucky Peat or Peat (S3)
- ___ Sandy Gleyed Matrix (S4)
- ___ Sandy Redox (S5)
- ___ Stripped Matrix (S6)
- X Loamy Mucky Mineral (F1)
- ___ Loamy Gleyed Matrix (F2)
- ___ Depleted Matrix (F3)
- ___ Redox Dark Surface (F6)
- ___ Depleted Dark Surface (F7)
- ___ Redox Depressions (F8)

Indicators for Problematic Hydric Soils:

- ___ Coast Prairie Redox (A16) (**LRR K, L, R**)
- ___ Dark Surface (S7) (**LRR K, L**)
- ___ Iron-Manganese Masses (F12) (**LRR K, L, R**)
- ___ Very Shallow Dark Surface (TF12)
- ___ Other (explain in remarks)

*Indicators of hydrophytic vegetation and weltand hydrology must be present, unless disturbed or problematic

Restrictive Layer (if observed):
Type: _____
Depth (inches): _____

Hydric soil present? Y

Remarks:

HYDROLOGY

Wetland Hydrology Indicators:

Primary Indicators (minimum of one is required; check all that apply)

- X Surface Water (A1)
- X High Water Table (A2)
- X Saturation (A3)
- ___ Water Marks (B1)
- ___ Sediment Deposits (B2)
- ___ Drift Deposits (B3)
- ___ Algal Mat or Crust (B4)
- ___ Iron Deposits (B5)
- ___ Inundation Visible on Aerial Imagery (B7)
- ___ Sparsely Vegetated Concave Surface (B8)
- ___ Water-Stained Leaves (B9)
- ___ Aquatic Fauna (B13)
- ___ True Aquatic Plants (B14)
- X Hydrogen Sulfide Odor (C1)
- ___ Oxidized Rhizospheres on Living Roots (C3)
- ___ Presence of Reduced Iron (C4)
- ___ Recent Iron Reduction in Tilled Soils (C6)
- ___ Thin Muck Surface (C7)
- ___ Gauge or Well Data (D9)
- ___ Other (Explain in Remarks)

Secondary Indicators (minimum of two required)

- ___ Surface Soil Cracks (B6)
- ___ Drainage Patterns (B10)
- ___ Dry-Season Water Table (C2)
- ___ Crayfish Burrows (C8)
- ___ Saturation Visible on Aerial Imagery (C9)
- ___ Stunted or Stressed Plants (D1)
- X Geomorphic Position (D2)
- X FAC-Neutral Test (D5)

Field Observations:

Surface water present?	Yes	X	No	___	Depth (inches):	2
Water table present?	Yes	X	No	___	Depth (inches):	2
Saturation present? (includes capillary fringe)	Yes	X	No	___	Depth (inches):	Surface

Indicators of wetland hydrology present? Y

Describe recorded data (stream gauge, monitoring well, aerial photos, previous inspections), if available:

Remarks:

WETLAND DETERMINATION DATA FORM - Midwest Region

Project/Site: Crow River Heights West | City/County: Hanover/Wright | Sampling Date: 5/3/2017

Applicant/Owner: Dennis Backes | State: MN | Sampling Point: SP3-1U and SP5-1U

Investigator(s): B.Carlson, A.Krinke, A.Cameron | Section, Township, Range: S:34 T:120N R:24W

Landform (hillslope, terrace, etc.): Flat Hillslope | Local relief (concave, convex, none): Linear

Slope (%): 2 - 3 | Lat: | Long: | Datum:

Soil Map Unit Name: Angus-Cordova Complex (Partially Hydric) | NWI Classification: None

Are climatic/hydrologic conditions of the site typical for this time of the year? Y (If no, explain in remarks)

Are vegetation ____, soil ____, or hydrology ____ significantly disturbed?

Are vegetation ____, soil ____, or hydrology ____ naturally problematic?

Are "normal circumstances" present? Yes

SUMMARY OF FINDINGS

(If needed, explain any answers in remarks.)

Hydrophytic vegetation present?	N	**Is the sampled area within a wetland?**	N
Hydric soil present?	Y		
Indicators of wetland hydrology present?	Y	If yes, optional wetland site ID:	

Remarks: (Explain alternative procedures here or in a separate report.)

Precipitation from Gridded Database Method within normal range. 30-day precipitation rolling total wetter than typical.

VEGETATION -- Use scientific names of plants.

Tree Stratum (Plot size: 30 ft Radius)	Absolute % Cover	Dominant Species	Indicator Staus
1 *Fraxinus pennsylvanica*	30	Y	FACW
2 *Ostrya virginiana*	25	Y	FACU
3			
4			
5			
	55	= Total Cover	

Sapling/Shrub stratum (Plot size: 15 ft Radius)			
1 *Zanthoxylum americanum*	25	Y	FACU
2 *Acer rubrum*	10	Y	FAC
3			
4			
5			
	35	= Total Cover	

Herb stratum (Plot size: 5 ft Radius)			
1 *Geranium maculatum*	30	Y	FACU
2 *Carex blanda*	20	Y	FAC
3 *Alliaria petiolata*	10	N	FAC
4 *Hydrophyllum virginianum*	10	N	FAC
5 *Acer rubrum*	5	N	FAC
6			
7			
8			
9			
10			
	75	= Total Cover	

Woody vine stratum (Plot size: 30 ft Radius)			
1			
2			
	0	= Total Cover	

Dominance Test Worksheet

Number of Dominant Species that are OBL, FACW, or FAC: 3 (A)

Total Number of Dominant Species Across all Strata: 6 (B)

Percent of Dominant Species that are OBL, FACW, or FAC: 50.00% (A/B)

Prevalence Index Worksheet

Total % Cover of:

OBL species	0	x 1 =	0	
FACW species	30	x 2 =	60	
FAC species	55	x 3 =	165	
FACU species	80	x 4 =	320	
UPL species	0	x 5 =	0	
Column totals	165	(A)	545	(B)

Prevalence Index = B/A = 3.30

Hydrophytic Vegetation Indicators:

- ___ Rapid test for hydrophytic vegetation
- ___ Dominance test is >50%
- ___ Prevalence index is ≤3.0*
- ___ Morphogical adaptations* (provide supporting data in Remarks or on a separate sheet)
- ___ Problematic hydrophytic vegetation* (explain)

*Indicators of hydric soil and wetland hydrology must be present, unless disturbed or problematic

Hydrophytic vegetation present? N

Remarks: (Include photo numbers here or on a separate sheet)

SOIL

Sampling Point: P3-1U and SP5-1

Profile Description: (Describe to the depth needed to document the indicator or confirm the absence of indicators.)

Depth (Inches)	Matrix Color (moist)	Matrix %	Redox Features Color (moist)	Redox %	Type*	Loc**	Texture	Remarks
0-10	10YR 2/1	100					Clay Loam	
10-24	10YR 4/1	95	10YR 4/6	5	C	M	Clay Loam	

*Type: C = Concentration, D = Depletion, RM = Reduced Matrix, MS = Masked Sand Grains. **Location: PL = Pore Lining, M = Matrix

Hydric Soil Indicators:

- ___ Histisol (A1)
- ___ Histic Epipedon (A2)
- ___ Black Histic (A3)
- ___ Hydrogen Sulfide (A4)
- ___ Stratified Layers (A5)
- ___ 2 cm Muck (A10)
- X Depleted Below Dark Surface (A11)
- ___ Thick Dark Surface (A12)
- ___ Sandy Mucky Mineral (S1)
- ___ 5 cm Mucky Peat or Peat (S3)
- ___ Sandy Gleyed Matrix (S4)
- ___ Sandy Redox (S5)
- ___ Stripped Matrix (S6)
- ___ Loamy Mucky Mineral (F1)
- ___ Loamy Gleyed Matrix (F2)
- ___ Depleted Matrix (F3)
- ___ Redox Dark Surface (F6)
- ___ Depleted Dark Surface (F7)
- ___ Redox Depressions (F8)

Indicators for Problematic Hydric Soils:

- ___ Coast Prairie Redox (A16) (**LRR K, L, R**)
- ___ Dark Surface (S7) (**LRR K, L)**
- ___ Iron-Manganese Masses (F12) (**LRR K, L, R**)
- ___ Very Shallow Dark Surface (TF12)
- ___ Other (explain in remarks)

*Indicators of hydrophytic vegetation and weltand hydrology must be present, unless disturbed or problematic

Restrictive Layer (if observed):

Type: _____

Depth (inches): _____

Hydric soil present? Y

Remarks:

HYDROLOGY

Wetland Hydrology Indicators:

Primary Indicators (minimum of one is required; check all that apply)

- ___ Surface Water (A1)
- ___ High Water Table (A2)
- X Saturation (A3)
- ___ Water Marks (B1)
- ___ Sediment Deposits (B2)
- ___ Drift Deposits (B3)
- ___ Algal Mat or Crust (B4)
- ___ Iron Deposits (B5)
- ___ Inundation Visible on Aerial Imagery (B7)
- ___ Sparsely Vegetated Concave Surface (B8)
- ___ Water-Stained Leaves (B9)
- ___ Aquatic Fauna (B13)
- ___ True Aquatic Plants (B14)
- ___ Hydrogen Sulfide Odor (C1)
- ___ Oxidized Rhizospheres on Living Roots (C3)
- ___ Presence of Reduced Iron (C4)
- ___ Recent Iron Reduction in Tilled Soils (C6)
- ___ Thin Muck Surface (C7)
- ___ Gauge or Well Data (D9)
- ___ Other (Explain in Remarks)

Secondary Indicators (minimum of two required)

- ___ Surface Soil Cracks (B6)
- ___ Drainage Patterns (B10)
- ___ Dry-Season Water Table (C2)
- ___ Crayfish Burrows (C8)
- ___ Saturation Visible on Aerial Imagery (C9)
- ___ Stunted or Stressed Plants (D1)
- ___ Geomorphic Position (D2)
- ___ FAC-Neutral Test (D5)

Field Observations:

Surface water present?	Yes		No	X	Depth (inches):	
Water table present?	Yes	X	No		Depth (inches):	14
Saturation present? (includes capillary fringe)	Yes	X	No		Depth (inches):	8

Indicators of wetland hydrology present? Y

Describe recorded data (stream gauge, monitoring well, aerial photos, previous inspections), if available:

Remarks:

WETLAND DETERMINATION DATA FORM - Midwest Region

Project/Site: Crow River Heights West | City/County: Hanover/Wright | Sampling Date: 5/3/2017

Applicant/Owner: Dennis Backes | State: MN | Sampling Point: SP3-1W

Investigator(s): B.Carlson, A.Krinke, A.Cameron | Section, Township, Range: S:34 T:120N R:24W

Landform (hillslope, terrace, etc.): Depression | Local relief (concave, convex, none): Concave

Slope (%): 0 - 2 | Lat: | Long: | Datum:

Soil Map Unit Name: Angus-Cordova Complex (Partially Hydric) | NWI Classification: None

Are climatic/hydrologic conditions of the site typical for this time of the year? Y (If no, explain in remarks)

Are vegetation ____, soil ____, or hydrology ____ significantly disturbed?

Are vegetation ____, soil ____, or hydrology ____ naturally problematic?

Are "normal circumstances" present? Yes

SUMMARY OF FINDINGS

(If needed, explain any answers in remarks.)

Hydrophytic vegetation present?	Y	**Is the sampled area within a wetland?**	Y
Hydric soil present?	Y		
Indicators of wetland hydrology present?	Y	If yes, optional wetland site ID:	Wetland 3

Remarks: (Explain alternative procedures here or in a separate report.)

Precipitation from Gridded Database Method within normal range. 30-day precipitation rolling total wetter than typical.

VEGETATION -- Use scientific names of plants.

Tree Stratum (Plot size: 30 ft Radius)	Absolute % Cover	Dominant Species	Indicator Staus
1			
2			
3			
4			
5			
	0	= Total Cover	

Sapling/Shrub stratum (Plot size: 15 ft Radius)	Absolute % Cover	Dominant Species	Indicator Staus
1 *Rhamnus cathartica*	15	Y	FAC
2			
3			
4			
5			
	15	= Total Cover	

Herb stratum (Plot size: 5 ft Radius)	Absolute % Cover	Dominant Species	Indicator Staus
1 *Hydrophyllum virginianum*	30	Y	FAC
2 *Carex spp.*	20	Y	FACW
3 *Solidago gigantea*	15	Y	FACW
4 *Geranium maculatum*	10	N	FACU
5			
6			
7			
8			
9			
10			
	75	= Total Cover	

Woody vine stratum (Plot size: 30 ft Radius)	Absolute % Cover	Dominant Species	Indicator Staus
1			
2			
	0	= Total Cover	

Dominance Test Worksheet

Number of Dominant Species that are OBL, FACW, or FAC: 4 (A)

Total Number of Dominant Species Across all Strata: 4 (B)

Percent of Dominant Species that are OBL, FACW, or FAC: 100.00% (A/B)

Prevalence Index Worksheet

Total % Cover of:

OBL species	0	x 1 =	0	
FACW species	35	x 2 =	70	
FAC species	45	x 3 =	135	
FACU species	10	x 4 =	40	
UPL species	0	x 5 =	0	
Column totals	90	(A)	245	(B)

Prevalence Index = B/A = 2.72

Hydrophytic Vegetation Indicators:

- ___ Rapid test for hydrophytic vegetation
- X Dominance test is >50%
- X Prevalence index is ≤3.0*
- ___ Morphogical adaptations* (provide supporting data in Remarks or on a separate sheet)
- ___ Problematic hydrophytic vegetation* (explain)

*Indicators of hydric soil and wetland hydrology must be present, unless disturbed or problematic

Hydrophytic vegetation present? Y

Remarks: (Include photo numbers here or on a separate sheet)

Carex spp. assumed FACW or wetter.

SOIL

Sampling Point: SP3-1W

Profile Description: (Describe to the depth needed to document the indicator or confirm the absence of indicators.)

Depth (Inches)	Matrix Color (moist)	Matrix %	Redox Features Color (moist)	Redox %	Type*	Loc**	Texture	Remarks
0-5	10YR 2/1	100					Clay Loam	
5-12	10YR 4/1	90	10YR 4/6	10	C	M	Clay Loam	

*Type: C = Concentration, D = Depletion, RM = Reduced Matrix, MS = Masked Sand Grains. **Location: PL = Pore Lining, M = Matrix

Hydric Soil Indicators:

- ___ Histisol (A1)
- ___ Histic Epipedon (A2)
- ___ Black Histic (A3)
- ___ Hydrogen Sulfide (A4)
- ___ Stratified Layers (A5)
- ___ 2 cm Muck (A10)
- X Depleted Below Dark Surface (A11)
- ___ Thick Dark Surface (A12)
- ___ Sandy Mucky Mineral (S1)
- ___ 5 cm Mucky Peat or Peat (S3)
- ___ Sandy Gleyed Matrix (S4)
- ___ Sandy Redox (S5)
- ___ Stripped Matrix (S6)
- ___ Loamy Mucky Mineral (F1)
- ___ Loamy Gleyed Matrix (F2)
- ___ Depleted Matrix (F3)
- ___ Redox Dark Surface (F6)
- ___ Depleted Dark Surface (F7)
- ___ Redox Depressions (F8)

Indicators for Problematic Hydric Soils:

- ___ Coast Prairie Redox (A16) (**LRR K, L, R**)
- ___ Dark Surface (S7) (**LRR K, L)**
- ___ Iron-Manganese Masses (F12) (**LRR K, L, R**)
- ___ Very Shallow Dark Surface (TF12)
- ___ Other (explain in remarks)

*Indicators of hydrophytic vegetation and weltand hydrology must be present, unless disturbed or problematic

Restrictive Layer (if observed):

Type: _____

Depth (inches): _____

Hydric soil present? Y

Remarks:

HYDROLOGY

Wetland Hydrology Indicators:

Primary Indicators (minimum of one is required; check all that apply)

- X Surface Water (A1)
- X High Water Table (A2)
- X Saturation (A3)
- ___ Water Marks (B1)
- ___ Sediment Deposits (B2)
- ___ Drift Deposits (B3)
- ___ Algal Mat or Crust (B4)
- ___ Iron Deposits (B5)
- ___ Inundation Visible on Aerial Imagery (B7)
- ___ Sparsely Vegetated Concave Surface (B8)
- ___ Water-Stained Leaves (B9)
- ___ Aquatic Fauna (B13)
- ___ True Aquatic Plants (B14)
- ___ Hydrogen Sulfide Odor (C1)
- ___ Oxidized Rhizospheres on Living Roots (C3)
- ___ Presence of Reduced Iron (C4)
- ___ Recent Iron Reduction in Tilled Soils (C6)
- ___ Thin Muck Surface (C7)
- ___ Gauge or Well Data (D9)
- ___ Other (Explain in Remarks)

Secondary Indicators (minimum of two required)

- ___ Surface Soil Cracks (B6)
- ___ Drainage Patterns (B10)
- ___ Dry-Season Water Table (C2)
- ___ Crayfish Burrows (C8)
- ___ Saturation Visible on Aerial Imagery (C9)
- ___ Stunted or Stressed Plants (D1)
- X Geomorphic Position (D2)
- X FAC-Neutral Test (D5)

Field Observations:

Surface water present?	Yes	X	No	___	Depth (inches):	1
Water table present?	Yes	X	No	___	Depth (inches):	1
Saturation present? (includes capillary fringe)	Yes	X	No	___	Depth (inches):	Surface

Indicators of wetland hydrology present? Y

Describe recorded data (stream gauge, monitoring well, aerial photos, previous inspections), if available:

Remarks:

WETLAND DETERMINATION DATA FORM - Midwest Region

Project/Site: Crow River Heights West | City/County: Hanover/Wright | Sampling Date: 5/3/2017

Applicant/Owner: Dennis Backes | State: MN | Sampling Point: SP4-1U

Investigator(s): B.Carlson, A.Krinke, A.Cameron | Section, Township, Range: S:34 T:120N R:24W

Landform (hillslope, terrace, etc.): Flat Hillslope | Local relief (concave, convex, none): Linear

Slope (%): 2 - 3 | Lat: | Long: | Datum:

Soil Map Unit Name: Glencoe Clay Loam | NWI Classification: None

Are climatic/hydrologic conditions of the site typical for this time of the year? Y (If no, explain in remarks)

Are vegetation X, soil ____, or hydrology ____ significantly disturbed?

Are vegetation ____, soil ____, or hydrology ____ naturally problematic?

Are "normal circumstances" present? No

SUMMARY OF FINDINGS

(If needed, explain any answers in remarks.)

Hydrophytic vegetation present?	N	**Is the sampled area within a wetland?**	N
Hydric soil present?	Y		
Indicators of wetland hydrology present?	N	If yes, optional wetland site ID:	

Remarks: (Explain alternative procedures here or in a separate report.)

Precipitation from Gridded Database Method within normal range. 30-day precipitation rolling total wetter than typical. Sample point was taken within a tilled farm field that lacked crops at the time of the field visit, therefore vegetation was disturbed.

VEGETATION -- Use scientific names of plants.

Tree Stratum (Plot size: 30 ft Radius)	Absolute % Cover	Dominant Species	Indicator Staus
1			
2			
3			
4			
5			
	0 = Total Cover		

Sapling/Shrub stratum (Plot size: 15 ft Radius)			
1			
2			
3			
4			
5			
	0 = Total Cover		

Herb stratum (Plot size: 5 ft Radius)			
1			
2			
3			
4			
5			
6			
7			
8			
9			
10			
	0 = Total Cover		

Woody vine stratum (Plot size: 30 ft Radius)			
1			
2			
	0 = Total Cover		

Dominance Test Worksheet

Number of Dominant Species that are OBL, FACW, or FAC: 0 (A)

Total Number of Dominant Species Across all Strata: 0 (B)

Percent of Dominant Species that are OBL, FACW, or FAC: 0.00% (A/B)

Prevalence Index Worksheet

Total % Cover of:

OBL species	0	x 1 =	0
FACW species	0	x 2 =	0
FAC species	0	x 3 =	0
FACU species	0	x 4 =	0
UPL species	0	x 5 =	0
Column totals	0 (A)		0 (B)

Prevalence Index = B/A =

Hydrophytic Vegetation Indicators:

- ___ Rapid test for hydrophytic vegetation
- ___ Dominance test is >50%
- ___ Prevalence index is ≤3.0*
- ___ Morphogical adaptations* (provide supporting data in Remarks or on a separate sheet)
- ___ Problematic hydrophytic vegetation* (explain)

*Indicators of hydric soil and wetland hydrology must be present, unless disturbed or problematic

Hydrophytic vegetation present? N

Remarks: (Include photo numbers here or on a separate sheet)

Sample point taken within a tilled farmfield. The area surrounding the sample point lacked vegetation at the time of the field visit.

SOIL

Sampling Point: SP4-1U

Profile Description: (Describe to the depth needed to document the indicator or confirm the absence of indicators.)

Depth (Inches)	Matrix Color (moist)	Matrix %	Redox Features Color (moist)	Redox %	Type*	Loc**	Texture	Remarks
0-18	10YR 2/1	100					Clay Loam	
18-24	10YR 2/1	98	10YR 4/6	2	C	M	Clay Loam	
24-30	2.5Y 5/2	80	10YR 4/6	20	C	M	Sandy Clay Loam	

*Type: C = Concentration, D = Depletion, RM = Reduced Matrix, MS = Masked Sand Grains. **Location: PL = Pore Lining, M = Matrix

Hydric Soil Indicators:

- ___ Histisol (A1)
- ___ Histic Epipedon (A2)
- ___ Black Histic (A3)
- ___ Hydrogen Sulfide (A4)
- ___ Stratified Layers (A5)
- ___ 2 cm Muck (A10)
- ___ Depleted Below Dark Surface (A11)
- X Thick Dark Surface (A12)
- ___ Sandy Mucky Mineral (S1)
- ___ 5 cm Mucky Peat or Peat (S3)
- ___ Sandy Gleyed Matrix (S4)
- ___ Sandy Redox (S5)
- ___ Stripped Matrix (S6)
- ___ Loamy Mucky Mineral (F1)
- ___ Loamy Gleyed Matrix (F2)
- ___ Depleted Matrix (F3)
- ___ Redox Dark Surface (F6)
- ___ Depleted Dark Surface (F7)
- ___ Redox Depressions (F8)

Indicators for Problematic Hydric Soils:

- ___ Coast Prairie Redox (A16) (**LRR K, L, R**)
- ___ Dark Surface (S7) (**LRR K, L)**
- ___ Iron-Manganese Masses (F12) (**LRR K, L, R**)
- ___ Very Shallow Dark Surface (TF12)
- ___ Other (explain in remarks)

*Indicators of hydrophytic vegetation and weltand hydrology must be present, unless disturbed or problematic

Restrictive Layer (if observed):

Type: _____

Depth (inches): _____

Hydric soil present? Y

Remarks:

HYDROLOGY

Wetland Hydrology Indicators:

Primary Indicators (minimum of one is required; check all that apply)

- ___ Surface Water (A1)
- ___ High Water Table (A2)
- ___ Saturation (A3)
- ___ Water Marks (B1)
- ___ Sediment Deposits (B2)
- ___ Drift Deposits (B3)
- ___ Algal Mat or Crust (B4)
- ___ Iron Deposits (B5)
- ___ Inundation Visible on Aerial Imagery (B7)
- ___ Sparsely Vegetated Concave Surface (B8)
- ___ Water-Stained Leaves (B9)
- ___ Aquatic Fauna (B13)
- ___ True Aquatic Plants (B14)
- ___ Hydrogen Sulfide Odor (C1)
- ___ Oxidized Rhizospheres on Living Roots (C3)
- ___ Presence of Reduced Iron (C4)
- ___ Recent Iron Reduction in Tilled Soils (C6)
- ___ Thin Muck Surface (C7)
- ___ Gauge or Well Data (D9)
- ___ Other (Explain in Remarks)

Secondary Indicators (minimum of two required)

- ___ Surface Soil Cracks (B6)
- ___ Drainage Patterns (B10)
- ___ Dry-Season Water Table (C2)
- ___ Crayfish Burrows (C8)
- ___ Saturation Visible on Aerial Imagery (C9)
- ___ Stunted or Stressed Plants (D1)
- ___ Geomorphic Position (D2)
- ___ FAC-Neutral Test (D5)

Field Observations:

Surface water present?	Yes		No	X	Depth (inches):	
Water table present?	Yes	X	No		Depth (inches):	22
Saturation present? (includes capillary fringe)	Yes	X	No		Depth (inches):	18

Indicators of wetland hydrology present? N

Describe recorded data (stream gauge, monitoring well, aerial photos, previous inspections), if available:

Remarks:

WETLAND DETERMINATION DATA FORM - Midwest Region

Project/Site: Crow River Heights West | City/County: Hanover/Wright | Sampling Date: 5/3/2017

Applicant/Owner: Dennis Backes | State: MN | Sampling Point: SP4-1W

Investigator(s): B.Carlson, A.Krinke, A.Cameron | Section, Township, Range: S:34 T:120N R:24W

Landform (hillslope, terrace, etc.): Depression | Local relief (concave, convex, none): Concave

Slope (%): 0 - 2 | Lat: | Long: | Datum:

Soil Map Unit Name: Glencoe Clay Loam (Hydric) | NWI Classification: None

Are climatic/hydrologic conditions of the site typical for this time of the year? Y (If no, explain in remarks)

Are vegetation X, soil ____, or hydrology ____ significantly disturbed?

Are vegetation ____, soil ____, or hydrology ____ naturally problematic?

Are "normal circumstances" present? No

SUMMARY OF FINDINGS

(If needed, explain any answers in remarks.)

Hydrophytic vegetation present?	Y	**Is the sampled area within a wetland?**	Y
Hydric soil present?	Y		
Indicators of wetland hydrology present?	Y	If yes, optional wetland site ID:	Wetland 4

Remarks: (Explain alternative procedures here or in a separate report.)

Precipitation from Gridded Database Method within normal range. 30-day precipitation rolling total wetter than typical. Sample point was taken within a tilled farm field that lacked crops at the time of the field visit, therefore vegetation was disturbed.

VEGETATION -- Use scientific names of plants.

Tree Stratum (Plot size: 30 ft Radius)	Absolute % Cover	Dominant Species	Indicator Staus
1			
2			
3			
4			
5			
	0	= Total Cover	

Sapling/Shrub stratum (Plot size: 15 ft Radius)			
1			
2			
3			
4			
5			
	0	= Total Cover	

Herb stratum (Plot size: 5 ft Radius)			
1 *Persicaria pensylvanica*	20	Y	FACW
2 *Phalaris arundinacea*	10	Y	FACW
3 *Bidens frondosa*	5	N	FACW
4			
5			
6			
7			
8			
9			
10			
	35	= Total Cover	

Woody vine stratum (Plot size: 30 ft Radius)			
1			
2			
	0	= Total Cover	

Dominance Test Worksheet

Number of Dominant Species that are OBL, FACW, or FAC: 2 (A)

Total Number of Dominant Species Across all Strata: 2 (B)

Percent of Dominant Species that are OBL, FACW, or FAC: 100.00% (A/B)

Prevalence Index Worksheet

Total % Cover of:

OBL species	0	x 1 =	0	
FACW species	35	x 2 =	70	
FAC species	0	x 3 =	0	
FACU species	0	x 4 =	0	
UPL species	0	x 5 =	0	
Column totals	35	(A)	70	(B)

Prevalence Index = B/A = 2.00

Hydrophytic Vegetation Indicators:

- ___ Rapid test for hydrophytic vegetation
- X Dominance test is >50%
- X Prevalence index is ≤3.0*
- ___ Morphogical adaptations* (provide supporting data in Remarks or on a separate sheet)
- ___ Problematic hydrophytic vegetation* (explain)

*Indicators of hydric soil and wetland hydrology must be present, unless disturbed or problematic

Hydrophytic vegetation present? Y

Remarks: (Include photo numbers here or on a separate sheet)

Sample point taken within a tilled farmfield.

SOIL

Sampling Point: SP4-1W

Profile Description: (Describe to the depth needed to document the indicator or confirm the absence of indicators.)

Depth (Inches)	Matrix Color (moist)	Matrix %	Redox Features Color (moist)	Redox %	Type*	Loc**	Texture	Remarks
0-8	10YR 2/1	98	10YR 4/6	2	C	M	Clay Loam	
8-12	10YR 4/2	95	10YR 4/6	5	C	M	Clay Loam	
12-24	2.5Y 5/2	90	10YR 4/6	10	C	M	Clay Loam	

*Type: C = Concentration, D = Depletion, RM = Reduced Matrix, MS = Masked Sand Grains. **Location: PL = Pore Lining, M = Matrix

Hydric Soil Indicators:

- ___ Histisol (A1)
- ___ Histic Epipedon (A2)
- ___ Black Histic (A3)
- ___ Hydrogen Sulfide (A4)
- ___ Stratified Layers (A5)
- ___ 2 cm Muck (A10)
- X Depleted Below Dark Surface (A11)
- ___ Thick Dark Surface (A12)
- ___ Sandy Mucky Mineral (S1)
- ___ 5 cm Mucky Peat or Peat (S3)
- ___ Sandy Gleyed Matrix (S4)
- ___ Sandy Redox (S5)
- ___ Stripped Matrix (S6)
- ___ Loamy Mucky Mineral (F1)
- ___ Loamy Gleyed Matrix (F2)
- ___ Depleted Matrix (F3)
- ___ Redox Dark Surface (F6)
- ___ Depleted Dark Surface (F7)
- ___ Redox Depressions (F8)

Indicators for Problematic Hydric Soils:

- ___ Coast Prairie Redox (A16) (**LRR K, L, R**)
- ___ Dark Surface (S7) (**LRR K, L**)
- ___ Iron-Manganese Masses (F12) (**LRR K, L, R**)
- ___ Very Shallow Dark Surface (TF12)
- ___ Other (explain in remarks)

*Indicators of hydrophytic vegetation and weltand hydrology must be present, unless disturbed or problematic

Restrictive Layer (if observed):

Type: _____

Depth (inches): _____

Hydric soil present? Y

Remarks:

HYDROLOGY

Wetland Hydrology Indicators:

Primary Indicators (minimum of one is required; check all that apply)

- X Surface Water (A1)
- X High Water Table (A2)
- X Saturation (A3)
- ___ Water Marks (B1)
- ___ Sediment Deposits (B2)
- ___ Drift Deposits (B3)
- ___ Algal Mat or Crust (B4)
- ___ Iron Deposits (B5)
- ___ Inundation Visible on Aerial Imagery (B7)
- ___ Sparsely Vegetated Concave Surface (B8)
- ___ Water-Stained Leaves (B9)
- ___ Aquatic Fauna (B13)
- ___ True Aquatic Plants (B14)
- ___ Hydrogen Sulfide Odor (C1)
- ___ Oxidized Rhizospheres on Living Roots (C3)
- ___ Presence of Reduced Iron (C4)
- ___ Recent Iron Reduction in Tilled Soils (C6)
- ___ Thin Muck Surface (C7)
- ___ Gauge or Well Data (D9)
- ___ Other (Explain in Remarks)

Secondary Indicators (minimum of two required)

- ___ Surface Soil Cracks (B6)
- ___ Drainage Patterns (B10)
- ___ Dry-Season Water Table (C2)
- ___ Crayfish Burrows (C8)
- ___ Saturation Visible on Aerial Imagery (C9)
- ___ Stunted or Stressed Plants (D1)
- X Geomorphic Position (D2)
- X FAC-Neutral Test (D5)

Field Observations:

Surface water present?	Yes	X	No	___	Depth (inches):	2
Water table present?	Yes	X	No	___	Depth (inches):	2
Saturation present? (includes capillary fringe)	Yes	X	No	___	Depth (inches):	Surface

Indicators of wetland hydrology present? Y

Describe recorded data (stream gauge, monitoring well, aerial photos, previous inspections), if available:

Remarks:

WETLAND DETERMINATION DATA FORM - Midwest Region

Project/Site: Crow River Heights West | City/County: Hanover/Wright | Sampling Date: 5/3/2017

Applicant/Owner: Dennis Backes | State: MN | Sampling Point: SP5-1W

Investigator(s): B.Carlson, A.Krinke, A.Cameron | Section, Township, Range: S:34 T:120N R:24W

Landform (hillslope, terrace, etc.): Depression | Local relief (concave, convex, none): Concave

Slope (%): 0 - 2 | Lat: | Long: | Datum:

Soil Map Unit Name: Angus-Cordova Complex (Partially Hydric) | NWI Classification: None

Are climatic/hydrologic conditions of the site typical for this time of the year? Y (If no, explain in remarks)

Are vegetation ____, soil ____, or hydrology ____ significantly disturbed?

Are vegetation ____, soil ____, or hydrology ____ naturally problematic?

Are "normal circumstances" present? Yes

SUMMARY OF FINDINGS

(If needed, explain any answers in remarks.)

Hydrophytic vegetation present?	Y	**Is the sampled area within a wetland?**	Y
Hydric soil present?	Y		
Indicators of wetland hydrology present?	Y	If yes, optional wetland site ID:	Wetland 5

Remarks: (Explain alternative procedures here or in a separate report.)

Precipitation from Gridded Database Method within normal range. 30-day precipitation rolling total wetter than typical.

VEGETATION -- Use scientific names of plants.

Tree Stratum (Plot size: 30 ft Radius)	Absolute % Cover	Dominant Species	Indicator Staus
1			
2			
3			
4			
5			
	0	= Total Cover	

Sapling/Shrub stratum (Plot size: 15 ft Radius)			
1			
2			
3			
4			
5			
	0	= Total Cover	

Herb stratum (Plot size: 5 ft Radius)			
1 *Hydrophyllum virginianum*	60	Y	FAC
2 *Galium aparine*	20	N	FACU
3 *Geranium maculatum*	15	N	FACU
4 *Athyrium filix-femina*	5	N	FAC
5 *Leonurus cardiaca*	5	N	UPL
6			
7			
8			
9			
10			
	105	= Total Cover	

Woody vine stratum (Plot size: 30 ft Radius)			
1			
2			
	0	= Total Cover	

Dominance Test Worksheet

Number of Dominant Species that are OBL, FACW, or FAC: 1 (A)

Total Number of Dominant Species Across all Strata: 1 (B)

Percent of Dominant Species that are OBL, FACW, or FAC: 100.00% (A/B)

Prevalence Index Worksheet

Total % Cover of:

OBL species	0	x 1 =	0	
FACW species	0	x 2 =	0	
FAC species	65	x 3 =	195	
FACU species	35	x 4 =	140	
UPL species	5	x 5 =	25	
Column totals	105	(A)	360	(B)

Prevalence Index = B/A = 3.43

Hydrophytic Vegetation Indicators:

- ___ Rapid test for hydrophytic vegetation
- X Dominance test is >50%
- ___ Prevalence index is ≤3.0*
- ___ Morphogical adaptations* (provide supporting data in Remarks or on a separate sheet)
- ___ Problematic hydrophytic vegetation* (explain)

*Indicators of hydric soil and wetland hydrology must be present, unless disturbed or problematic

Hydrophytic vegetation present? Y

Remarks: (Include photo numbers here or on a separate sheet)

Prevalence index greater than 3.0

SOIL

Sampling Point: SP5-1W

Profile Description: (Describe to the depth needed to document the indicator or confirm the absence of indicators.)

Depth (Inches)	Matrix Color (moist)	Matrix %	Redox Features Color (moist)	Redox %	Type*	Loc**	Texture	Remarks
0-6	10YR 2/1	100					Clay Loam	
6-18	10YR 2/1	90	10YR 4/6	5	C	M	Clay Loam	
			10YR 4/1	5	C	M	Clay Loam	
18-24	10YR 4/1	95	10YR 4/6	5	C	M	Clay Loam	

*Type: C = Concentration, D = Depletion, RM = Reduced Matrix, MS = Masked Sand Grains. **Location: PL = Pore Lining, M = Matrix

Hydric Soil Indicators:

- ___ Histisol (A1)
- ___ Histic Epipedon (A2)
- ___ Black Histic (A3)
- ___ Hydrogen Sulfide (A4)
- ___ Stratified Layers (A5)
- ___ 2 cm Muck (A10)
- ___ Depleted Below Dark Surface (A11)
- X Thick Dark Surface (A12)
- ___ Sandy Mucky Mineral (S1)
- ___ 5 cm Mucky Peat or Peat (S3)
- ___ Sandy Gleyed Matrix (S4)
- ___ Sandy Redox (S5)
- ___ Stripped Matrix (S6)
- ___ Loamy Mucky Mineral (F1)
- ___ Loamy Gleyed Matrix (F2)
- ___ Depleted Matrix (F3)
- ___ Redox Dark Surface (F6)
- ___ Depleted Dark Surface (F7)
- ___ Redox Depressions (F8)

Indicators for Problematic Hydric Soils:

- ___ Coast Prairie Redox (A16) (**LRR K, L, R**)
- ___ Dark Surface (S7) (**LRR K, L)**
- ___ Iron-Manganese Masses (F12) (**LRR K, L, R**)
- ___ Very Shallow Dark Surface (TF12)
- ___ Other (explain in remarks)

*Indicators of hydrophytic vegetation and weltand hydrology must be present, unless disturbed or problematic

Restrictive Layer (if observed):

Type: _____

Depth (inches): _____

Hydric soil present? Y

Remarks:

HYDROLOGY

Wetland Hydrology Indicators:

Primary Indicators (minimum of one is required; check all that apply)

- ___ Surface Water (A1)
- X High Water Table (A2)
- X Saturation (A3)
- ___ Water Marks (B1)
- ___ Sediment Deposits (B2)
- ___ Drift Deposits (B3)
- ___ Algal Mat or Crust (B4)
- ___ Iron Deposits (B5)
- ___ Inundation Visible on Aerial Imagery (B7)
- ___ Sparsely Vegetated Concave Surface (B8)
- ___ Water-Stained Leaves (B9)
- ___ Aquatic Fauna (B13)
- ___ True Aquatic Plants (B14)
- ___ Hydrogen Sulfide Odor (C1)
- ___ Oxidized Rhizospheres on Living Roots (C3)
- ___ Presence of Reduced Iron (C4)
- ___ Recent Iron Reduction in Tilled Soils (C6)
- ___ Thin Muck Surface (C7)
- ___ Gauge or Well Data (D9)
- ___ Other (Explain in Remarks)

Secondary Indicators (minimum of two required)

- ___ Surface Soil Cracks (B6)
- ___ Drainage Patterns (B10)
- ___ Dry-Season Water Table (C2)
- ___ Crayfish Burrows (C8)
- ___ Saturation Visible on Aerial Imagery (C9)
- ___ Stunted or Stressed Plants (D1)
- X Geomorphic Position (D2)
- ___ FAC-Neutral Test (D5)

Field Observations:

Surface water present?	Yes		No	X	Depth (inches):	
Water table present?	Yes	X	No		Depth (inches):	6
Saturation present? (includes capillary fringe)	Yes	X	No		Depth (inches):	Surface

Indicators of wetland hydrology present? Y

Describe recorded data (stream gauge, monitoring well, aerial photos, previous inspections), if available:

Remarks:

WETLAND DETERMINATION DATA FORM - Midwest Region

Project/Site: Crow River Heights West | City/County: Hanover/Wright | Sampling Date: 5/3/2017

Applicant/Owner: Dennis Backes | State: MN | Sampling Point: SP6-1U

Investigator(s): B.Carlson, A.Krinke, A.Cameron | Section, Township, Range: S:34 T:120N R:24W

Landform (hillslope, terrace, etc.): Hillslope | Local relief (concave, convex, none): Linear

Slope (%): 3 - 5 | Lat: | Long: | Datum:

Soil Map Unit Name: Angus-Cordova Complex (Partially Hydric) | NWI Classification: None

Are climatic/hydrologic conditions of the site typical for this time of the year? Y (If no, explain in remarks)

Are vegetation ____, soil X, or hydrology ____ significantly disturbed?

Are vegetation ____, soil ____, or hydrology ____ naturally problematic?

Are "normal circumstances" present? No

SUMMARY OF FINDINGS

(If needed, explain any answers in remarks.)

Hydrophytic vegetation present?	Y	**Is the sampled area within a wetland?**	N
Hydric soil present?	N		
Indicators of wetland hydrology present?	N	If yes, optional wetland site ID:	

Remarks: (Explain alternative procedures here or in a separate report.)

Precipitation from Gridded Database Method within normal range. 30-day precipitation rolling total wetter than typical. Soils in this location were disturbed due to previous grading of the site.

VEGETATION -- Use scientific names of plants.

Tree Stratum (Plot size: 30 ft Radius)	Absolute % Cover	Dominant Species	Indicator Staus
1			
2			
3			
4			
5			
	0	= Total Cover	

Sapling/Shrub stratum (Plot size: 15 ft Radius)			
1			
2			
3			
4			
5			
	0	= Total Cover	

Herb stratum (Plot size: 5 ft Radius)			
1 *Bromus inermis*	30	Y	FACU
2 *Poa pratensis*	25	Y	FAC
3 *Phalaris arundinacea*	20	Y	FACW
4 *Solidago canadensis*	15	N	FACU
5			
6			
7			
8			
9			
10			
	90	= Total Cover	

Woody vine stratum (Plot size: 30 ft Radius)			
1			
2			
	0	= Total Cover	

Dominance Test Worksheet

Number of Dominant Species that are OBL, FACW, or FAC: 2 (A)

Total Number of Dominant Species Across all Strata: 3 (B)

Percent of Dominant Species that are OBL, FACW, or FAC: 66.67% (A/B)

Prevalence Index Worksheet

Total % Cover of:

OBL species	0	x 1 =	0	
FACW species	20	x 2 =	40	
FAC species	25	x 3 =	75	
FACU species	45	x 4 =	180	
UPL species	0	x 5 =	0	
Column totals	90	(A)	295	(B)

Prevalence Index = B/A = 3.28

Hydrophytic Vegetation Indicators:

- ___ Rapid test for hydrophytic vegetation
- X Dominance test is >50%
- ___ Prevalence index is ≤3.0*
- ___ Morphogical adaptations* (provide supporting data in Remarks or on a separate sheet)
- ___ Problematic hydrophytic vegetation* (explain)

*Indicators of hydric soil and wetland hydrology must be present, unless disturbed or problematic

Hydrophytic vegetation present? Y

Remarks: (Include photo numbers here or on a separate sheet)

SOIL

Sampling Point: SP6-1U

Profile Description: (Describe to the depth needed to document the indicator or confirm the absence of indicators.)

Depth (Inches)	Matrix Color (moist)	Matrix %	Redox Features Color (moist)	Redox %	Type*	Loc**	Texture	Remarks
0-16	10YR 3/2	98	10YR 4/6	2	C	M	Sandy Clay Loam	
16-24	10YR 4/3	100					Sandy Loam	Fill soil, contains gravel

*Type: C = Concentration, D = Depletion, RM = Reduced Matrix, MS = Masked Sand Grains. **Location: PL = Pore Lining, M = Matrix

Hydric Soil Indicators:

- ___ Histisol (A1)
- ___ Histic Epipedon (A2)
- ___ Black Histic (A3)
- ___ Hydrogen Sulfide (A4)
- ___ Stratified Layers (A5)
- ___ 2 cm Muck (A10)
- ___ Depleted Below Dark Surface (A11)
- ___ Thick Dark Surface (A12)
- ___ Sandy Mucky Mineral (S1)
- ___ 5 cm Mucky Peat or Peat (S3)
- ___ Sandy Gleyed Matrix (S4)
- ___ Sandy Redox (S5)
- ___ Stripped Matrix (S6)
- ___ Loamy Mucky Mineral (F1)
- ___ Loamy Gleyed Matrix (F2)
- ___ Depleted Matrix (F3)
- ___ Redox Dark Surface (F6)
- ___ Depleted Dark Surface (F7)
- ___ Redox Depressions (F8)

Indicators for Problematic Hydric Soils:

- ___ Coast Prairie Redox (A16) (**LRR K, L, R**)
- ___ Dark Surface (S7) (**LRR K, L)**
- ___ Iron-Manganese Masses (F12) (**LRR K, L, R**)
- ___ Very Shallow Dark Surface (TF12)
- ___ Other (explain in remarks)

*Indicators of hydrophytic vegetation and weltand hydrology must be present, unless disturbed or problematic

Restrictive Layer (if observed):

Type: _____

Depth (inches): _____

Hydric soil present? N

Remarks:

Soils in this location were disturbed due to previous grading of the site.

HYDROLOGY

Wetland Hydrology Indicators:

Primary Indicators (minimum of one is required; check all that apply)

- ___ Surface Water (A1)
- ___ High Water Table (A2)
- ___ Saturation (A3)
- ___ Water Marks (B1)
- ___ Sediment Deposits (B2)
- ___ Drift Deposits (B3)
- ___ Algal Mat or Crust (B4)
- ___ Iron Deposits (B5)
- ___ Inundation Visible on Aerial Imagery (B7)
- ___ Sparsely Vegetated Concave Surface (B8)
- ___ Water-Stained Leaves (B9)
- ___ Aquatic Fauna (B13)
- ___ True Aquatic Plants (B14)
- ___ Hydrogen Sulfide Odor (C1)
- ___ Oxidized Rhizospheres on Living Roots (C3)
- ___ Presence of Reduced Iron (C4)
- ___ Recent Iron Reduction in Tilled Soils (C6)
- ___ Thin Muck Surface (C7)
- ___ Gauge or Well Data (D9)
- ___ Other (Explain in Remarks)

Secondary Indicators (minimum of two required)

- ___ Surface Soil Cracks (B6)
- ___ Drainage Patterns (B10)
- ___ Dry-Season Water Table (C2)
- ___ Crayfish Burrows (C8)
- ___ Saturation Visible on Aerial Imagery (C9)
- ___ Stunted or Stressed Plants (D1)
- ___ Geomorphic Position (D2)
- ___ FAC-Neutral Test (D5)

Field Observations:

Surface water present?	Yes	___	No	X	Depth (inches):	___
Water table present?	Yes	___	No	X	Depth (inches):	___
Saturation present? (includes capillary fringe)	Yes	___	No	X	Depth (inches):	___

Indicators of wetland hydrology present? N

Describe recorded data (stream gauge, monitoring well, aerial photos, previous inspections), if available:

Remarks:

WETLAND DETERMINATION DATA FORM - Midwest Region

Project/Site: Crow River Heights West | City/County: Hanover/Wright | Sampling Date: 5/3/2017

Applicant/Owner: Dennis Backes | State: MN | Sampling Point: SP6-1W

Investigator(s): B.Carlson, A.Krinke, A.Cameron | Section, Township, Range: S:34 T:120N R:24W

Landform (hillslope, terrace, etc.): Depression | Local relief (concave, convex, none): Concave

Slope (%): 0 - 1 | Lat: | Long: | Datum:

Soil Map Unit Name: Angus-Cordova Complex (Partially Hydric) | NWI Classification: PEM1Ad

Are climatic/hydrologic conditions of the site typical for this time of the year? Y (If no, explain in remarks)

Are vegetation ____, soil ____, or hydrology X significantly disturbed?

Are vegetation ____, soil ____, or hydrology ____ naturally problematic?

Are "normal circumstances" present? No

SUMMARY OF FINDINGS

(If needed, explain any answers in remarks.)

Hydrophytic vegetation present?	Y	**Is the sampled area within a wetland?**	Y
Hydric soil present?	Y		
Indicators of wetland hydrology present?	Y	If yes, optional wetland site ID:	Wetland 6

Remarks: (Explain alternative procedures here or in a separate report.)

Precipitation from Gridded Database Method within normal range. 30-day precipitation rolling total wetter than typical. Hydrology in this area had been disturbed due to adjacent grading of the site.

VEGETATION -- Use scientific names of plants.

Tree Stratum (Plot size: 30 ft Radius)	Absolute % Cover	Dominant Species	Indicator Staus
1			
2			
3			
4			
5			
	0	= Total Cover	

Sapling/Shrub stratum (Plot size: 15 ft Radius)			
1			
2			
3			
4			
5			
	0	= Total Cover	

Herb stratum (Plot size: 5 ft Radius)			
1 *Phalaris arundinacea*	100	Y	FACW
2			
3			
4			
5			
6			
7			
8			
9			
10			
	100	= Total Cover	

Woody vine stratum (Plot size: 30 ft Radius)			
1			
2			
	0	= Total Cover	

Dominance Test Worksheet

Number of Dominant Species that are OBL, FACW, or FAC: 1 (A)

Total Number of Dominant Species Across all Strata: 1 (B)

Percent of Dominant Species that are OBL, FACW, or FAC: 100.00% (A/B)

Prevalence Index Worksheet

Total % Cover of:

OBL species	0	x 1 =	0	
FACW species	100	x 2 =	200	
FAC species	0	x 3 =	0	
FACU species	0	x 4 =	0	
UPL species	0	x 5 =	0	
Column totals	100	(A)	200	(B)

Prevalence Index = B/A = 2.00

Hydrophytic Vegetation Indicators:

- ___ Rapid test for hydrophytic vegetation
- X Dominance test is >50%
- X Prevalence index is ≤3.0*
- ___ Morphogical adaptations* (provide supporting data in Remarks or on a separate sheet)
- ___ Problematic hydrophytic vegetation* (explain)

*Indicators of hydric soil and wetland hydrology must be present, unless disturbed or problematic

Hydrophytic vegetation present? Y

Remarks: (Include photo numbers here or on a separate sheet)

SOIL

Sampling Point: SP6-1W

Profile Description: (Describe to the depth needed to document the indicator or confirm the absence of indicators.)

Depth (Inches)	Matrix Color (moist)	Matrix %	Redox Features Color (moist)	Redox %	Type*	Loc**	Texture	Remarks
0-6	10YR 2/1	100					Mucky Loam	
6-9	10YR 4/2	95	10YR 4/6	5	C	M	Sandy Clay Loam	
9-22	10YR 4/2	80	10YR 4/6	20	C	M	Sandy Clay Loam	

*Type: C = Concentration, D = Depletion, RM = Reduced Matrix, MS = Masked Sand Grains. **Location: PL = Pore Lining, M = Matrix

Hydric Soil Indicators:

- ___ Histisol (A1)
- ___ Histic Epipedon (A2)
- ___ Black Histic (A3)
- ___ Hydrogen Sulfide (A4)
- ___ Stratified Layers (A5)
- ___ 2 cm Muck (A10)
- X Depleted Below Dark Surface (A11)
- ___ Thick Dark Surface (A12)
- ___ Sandy Mucky Mineral (S1)
- ___ 5 cm Mucky Peat or Peat (S3)
- ___ Sandy Gleyed Matrix (S4)
- ___ Sandy Redox (S5)
- ___ Stripped Matrix (S6)
- ___ Loamy Mucky Mineral (F1)
- ___ Loamy Gleyed Matrix (F2)
- ___ Depleted Matrix (F3)
- ___ Redox Dark Surface (F6)
- ___ Depleted Dark Surface (F7)
- ___ Redox Depressions (F8)

Indicators for Problematic Hydric Soils:

- ___ Coast Prairie Redox (A16) (**LRR K, L, R**)
- ___ Dark Surface (S7) (**LRR K, L**)
- ___ Iron-Manganese Masses (F12) (**LRR K, L, R**)
- ___ Very Shallow Dark Surface (TF12)
- ___ Other (explain in remarks)

*Indicators of hydrophytic vegetation and weltand hydrology must be present, unless disturbed or problematic

Restrictive Layer (if observed):

Type: _____

Depth (inches): _____

Hydric soil present? Y

Remarks:

HYDROLOGY

Wetland Hydrology Indicators:

Primary Indicators (minimum of one is required; check all that apply)

- X Surface Water (A1)
- X High Water Table (A2)
- X Saturation (A3)
- ___ Water Marks (B1)
- ___ Sediment Deposits (B2)
- ___ Drift Deposits (B3)
- ___ Algal Mat or Crust (B4)
- ___ Iron Deposits (B5)
- ___ Inundation Visible on Aerial Imagery (B7)
- ___ Sparsely Vegetated Concave Surface (B8)
- ___ Water-Stained Leaves (B9)
- ___ Aquatic Fauna (B13)
- ___ True Aquatic Plants (B14)
- ___ Hydrogen Sulfide Odor (C1)
- ___ Oxidized Rhizospheres on Living Roots (C3)
- ___ Presence of Reduced Iron (C4)
- ___ Recent Iron Reduction in Tilled Soils (C6)
- ___ Thin Muck Surface (C7)
- ___ Gauge or Well Data (D9)
- ___ Other (Explain in Remarks)

Secondary Indicators (minimum of two required)

- ___ Surface Soil Cracks (B6)
- ___ Drainage Patterns (B10)
- ___ Dry-Season Water Table (C2)
- ___ Crayfish Burrows (C8)
- ___ Saturation Visible on Aerial Imagery (C9)
- ___ Stunted or Stressed Plants (D1)
- X Geomorphic Position (D2)
- X FAC-Neutral Test (D5)

Field Observations:

Surface water present?	Yes	X	No	___	Depth (inches):	2
Water table present?	Yes	X	No	___	Depth (inches):	2
Saturation present? (includes capillary fringe)	Yes	X	No	___	Depth (inches):	0

Indicators of wetland hydrology present? Y

Describe recorded data (stream gauge, monitoring well, aerial photos, previous inspections), if available:

Remarks:

WETLAND DETERMINATION DATA FORM - Midwest Region

Project/Site: Crow River Heights West | City/County: Hanover/Wright | Sampling Date: 5/3/2017
Applicant/Owner: Dennis Backes | State: MN | Sampling Point: SP7-1U
Investigator(s): B.Carlson, A.Krinke, A.Cameron | Section, Township, Range: S:34 T:120N R:24W
Landform (hillslope, terrace, etc.): Hillslope | Local relief (concave, convex, none): Linear
Slope (%): 3 - 4 | Lat: | Long: | Datum:
Soil Map Unit Name: Angus-Cordova Complex (Partially Hydric) | NWI Classification: None
Are climatic/hydrologic conditions of the site typical for this time of the year? Y (If no, explain in remarks)
Are vegetation ____, soil ____, or hydrology ____ significantly disturbed?
Are vegetation ____, soil ____, or hydrology ____ naturally problematic?
Are "normal circumstances" present? Yes

SUMMARY OF FINDINGS

(If needed, explain any answers in remarks.)

Hydrophytic vegetation present?	N	**Is the sampled area within a wetland?**	N
Hydric soil present?	N		
Indicators of wetland hydrology present?	N	If yes, optional wetland site ID:	

Remarks: (Explain alternative procedures here or in a separate report.)

Precipitation from Gridded Database Method within normal range. 30-day precipitation rolling total wetter than typical.

VEGETATION -- Use scientific names of plants.

Tree Stratum (Plot size: 30 ft Radius)	Absolute % Cover	Dominant Species	Indicator Staus
1			
2			
3			
4			
5			
	0	= Total Cover	

Sapling/Shrub stratum (Plot size: 15 ft Radius)	Absolute % Cover	Dominant Species	Indicator Staus
1 *Zanthoxylum americanum*	20	Y	FACU
2 *Ostrya virginiana*	10	Y	FACU
3			
4			
5			
	30	= Total Cover	

Herb stratum (Plot size: 5 ft Radius)	Absolute % Cover	Dominant Species	Indicator Staus
1 *Hydrophyllum virginianum*	40	Y	FAC
2 *Carex pensylvanica*	15	Y	UPL
3 *Geranium maculatum*	10	N	FACU
4 *Ribes americanum*	10	N	FACW
5			
6			
7			
8			
9			
10			
	75	= Total Cover	

Woody vine stratum (Plot size: 30 ft Radius)	Absolute % Cover	Dominant Species	Indicator Staus
1			
2			
	0	= Total Cover	

Dominance Test Worksheet

Number of Dominant Species that are OBL, FACW, or FAC: 1 (A)
Total Number of Dominant Species Across all Strata: 4 (B)
Percent of Dominant Species that are OBL, FACW, or FAC: 25.00% (A/B)

Prevalence Index Worksheet

Total % Cover of:

OBL species	0	x 1 =	0	
FACW species	10	x 2 =	20	
FAC species	40	x 3 =	120	
FACU species	40	x 4 =	160	
UPL species	15	x 5 =	75	
Column totals	105	(A)	375	(B)

Prevalence Index = B/A = 3.57

Hydrophytic Vegetation Indicators:

- ___ Rapid test for hydrophytic vegetation
- ___ Dominance test is >50%
- ___ Prevalence index is ≤3.0*
- ___ Morphogical adaptations* (provide supporting data in Remarks or on a separate sheet)
- ___ Problematic hydrophytic vegetation* (explain)

*Indicators of hydric soil and wetland hydrology must be present, unless disturbed or problematic

Hydrophytic vegetation present? N

Remarks: (Include photo numbers here or on a separate sheet)

SOIL

Sampling Point: SP7-1U

Profile Description: (Describe to the depth needed to document the indicator or confirm the absence of indicators.)

Depth (Inches)	Matrix Color (moist)	Matrix %	Redox Features Color (moist)	Redox %	Type*	Loc**	Texture	Remarks
0-9	10YR 2/1	100					Loam	
9-24	10YR 3/2	80	10YR 4/1	5	D	M	Clay Loam	
	10YR 2/1	15						

*Type: C = Concentration, D = Depletion, RM = Reduced Matrix, MS = Masked Sand Grains. **Location: PL = Pore Lining, M = Matrix

Hydric Soil Indicators:

- ___ Histisol (A1)
- ___ Histic Epipedon (A2)
- ___ Black Histic (A3)
- ___ Hydrogen Sulfide (A4)
- ___ Stratified Layers (A5)
- ___ 2 cm Muck (A10)
- ___ Depleted Below Dark Surface (A11)
- ___ Thick Dark Surface (A12)
- ___ Sandy Mucky Mineral (S1)
- ___ 5 cm Mucky Peat or Peat (S3)
- ___ Sandy Gleyed Matrix (S4)
- ___ Sandy Redox (S5)
- ___ Stripped Matrix (S6)
- ___ Loamy Mucky Mineral (F1)
- ___ Loamy Gleyed Matrix (F2)
- ___ Depleted Matrix (F3)
- ___ Redox Dark Surface (F6)
- ___ Depleted Dark Surface (F7)
- ___ Redox Depressions (F8)

Indicators for Problematic Hydric Soils:

- ___ Coast Prairie Redox (A16) (**LRR K, L, R**)
- ___ Dark Surface (S7) (**LRR K, L**)
- ___ Iron-Manganese Masses (F12) (**LRR K, L, R**)
- ___ Very Shallow Dark Surface (TF12)
- ___ Other (explain in remarks)

*Indicators of hydrophytic vegetation and weltand hydrology must be present, unless disturbed or problematic

Restrictive Layer (if observed):

Type: _____

Depth (inches): _____

Hydric soil present? N

Remarks:

HYDROLOGY

Wetland Hydrology Indicators:

Primary Indicators (minimum of one is required; check all that apply)

- ___ Surface Water (A1)
- ___ High Water Table (A2)
- ___ Saturation (A3)
- ___ Water Marks (B1)
- ___ Sediment Deposits (B2)
- ___ Drift Deposits (B3)
- ___ Algal Mat or Crust (B4)
- ___ Iron Deposits (B5)
- ___ Inundation Visible on Aerial Imagery (B7)
- ___ Sparsely Vegetated Concave Surface (B8)
- ___ Water-Stained Leaves (B9)
- ___ Aquatic Fauna (B13)
- ___ True Aquatic Plants (B14)
- ___ Hydrogen Sulfide Odor (C1)
- ___ Oxidized Rhizospheres on Living Roots (C3)
- ___ Presence of Reduced Iron (C4)
- ___ Recent Iron Reduction in Tilled Soils (C6)
- ___ Thin Muck Surface (C7)
- ___ Gauge or Well Data (D9)
- ___ Other (Explain in Remarks)

Secondary Indicators (minimum of two required)

- ___ Surface Soil Cracks (B6)
- ___ Drainage Patterns (B10)
- ___ Dry-Season Water Table (C2)
- ___ Crayfish Burrows (C8)
- ___ Saturation Visible on Aerial Imagery (C9)
- ___ Stunted or Stressed Plants (D1)
- ___ Geomorphic Position (D2)
- ___ FAC-Neutral Test (D5)

Field Observations:

Surface water present?	Yes	___	No	X	Depth (inches): ___
Water table present?	Yes	___	No	X	Depth (inches): ___
Saturation present? (includes capillary fringe)	Yes	___	No	X	Depth (inches): ___

Indicators of wetland hydrology present? N

Describe recorded data (stream gauge, monitoring well, aerial photos, previous inspections), if available:

Remarks:

WETLAND DETERMINATION DATA FORM - Midwest Region

Project/Site: Crow River Heights West | City/County: Hanover/Wright | Sampling Date: 5/3/2017

Applicant/Owner: Dennis Backes | State: MN | Sampling Point: SP7-1W

Investigator(s): B.Carlson, A.Krinke, A.Cameron | Section, Township, Range: S:34 T:120N R:24W

Landform (hillslope, terrace, etc.): Depression | Local relief (concave, convex, none): Concave

Slope (%): 0 - 2 | Lat: | Long: | Datum:

Soil Map Unit Name: Angus-Cordova Complex (Partially Hydric) | NWI Classification: None

Are climatic/hydrologic conditions of the site typical for this time of the year? Y (If no, explain in remarks)

Are vegetation ____, soil ____, or hydrology ____ significantly disturbed?

Are vegetation ____, soil ____, or hydrology ____ naturally problematic?

Are "normal circumstances" present? Yes

SUMMARY OF FINDINGS

(If needed, explain any answers in remarks.)

Hydrophytic vegetation present?	Y	**Is the sampled area within a wetland?**	Y
Hydric soil present?	Y		
Indicators of wetland hydrology present?	Y	If yes, optional wetland site ID:	Wetland 7

Remarks: (Explain alternative procedures here or in a separate report.)

Precipitation from Gridded Database Method within normal range. 30-day precipitation rolling total wetter than typical.

VEGETATION -- Use scientific names of plants.

Tree Stratum (Plot size: 30 ft Radius)	Absolute % Cover	Dominant Species	Indicator Staus
1			
2			
3			
4			
5			
	0	= Total Cover	

Sapling/Shrub stratum (Plot size: 15 ft Radius)			
1			
2			
3			
4			
5			
	0	= Total Cover	

Herb stratum (Plot size: 5 ft Radius)			
1 *Geranium maculatum*	10	Y	FACU
2 *Solidago gigantea*	10	Y	FACW
3			
4			
5			
6			
7			
8			
9			
10			
	20	= Total Cover	

Woody vine stratum (Plot size: 30 ft Radius)			
1			
2			
	0	= Total Cover	

Dominance Test Worksheet

Number of Dominant Species that are OBL, FACW, or FAC: 1 (A)

Total Number of Dominant Species Across all Strata: 2 (B)

Percent of Dominant Species that are OBL, FACW, or FAC: 50.00% (A/B)

Prevalence Index Worksheet

Total % Cover of:

OBL species	0	x 1 =	0	
FACW species	10	x 2 =	20	
FAC species	0	x 3 =	0	
FACU species	10	x 4 =	40	
UPL species	0	x 5 =	0	
Column totals	20	(A)	60	(B)

Prevalence Index = B/A = 3.00

Hydrophytic Vegetation Indicators:

- ___ Rapid test for hydrophytic vegetation
- ___ Dominance test is >50%
- X Prevalence index is ≤3.0*
- ___ Morphogical adaptations* (provide supporting data in Remarks or on a separate sheet)
- ___ Problematic hydrophytic vegetation* (explain)

*Indicators of hydric soil and wetland hydrology must be present, unless disturbed or problematic

Hydrophytic vegetation present? Y

Remarks: (Include photo numbers here or on a separate sheet)

SOIL

Sampling Point: SP7-1W

Profile Description: (Describe to the depth needed to document the indicator or confirm the absence of indicators.)

Depth (Inches)	Matrix Color (moist)	Matrix %	Redox Features Color (moist)	Redox %	Type*	Loc**	Texture	Remarks
0-10	10YR 2/1	100					Loam	
10-24	10YR 4/1	95	10YR 4/6	5	C	M	Clay Loam	

*Type: C = Concentration, D = Depletion, RM = Reduced Matrix, MS = Masked Sand Grains. **Location: PL = Pore Lining, M = Matrix

Hydric Soil Indicators:

- ___ Histisol (A1)
- ___ Histic Epipedon (A2)
- ___ Black Histic (A3)
- ___ Hydrogen Sulfide (A4)
- ___ Stratified Layers (A5)
- ___ 2 cm Muck (A10)
- X Depleted Below Dark Surface (A11)
- ___ Thick Dark Surface (A12)
- ___ Sandy Mucky Mineral (S1)
- ___ 5 cm Mucky Peat or Peat (S3)
- ___ Sandy Gleyed Matrix (S4)
- ___ Sandy Redox (S5)
- ___ Stripped Matrix (S6)
- ___ Loamy Mucky Mineral (F1)
- ___ Loamy Gleyed Matrix (F2)
- ___ Depleted Matrix (F3)
- ___ Redox Dark Surface (F6)
- ___ Depleted Dark Surface (F7)
- ___ Redox Depressions (F8)

Indicators for Problematic Hydric Soils:

- ___ Coast Prairie Redox (A16) (**LRR K, L, R**)
- ___ Dark Surface (S7) (**LRR K, L**)
- ___ Iron-Manganese Masses (F12) (**LRR K, L, R**)
- ___ Very Shallow Dark Surface (TF12)
- ___ Other (explain in remarks)

*Indicators of hydrophytic vegetation and weltand hydrology must be present, unless disturbed or problematic

Restrictive Layer (if observed):

Type: _____

Depth (inches): _____

Hydric soil present? Y

Remarks:

HYDROLOGY

Wetland Hydrology Indicators:

Primary Indicators (minimum of one is required; check all that apply)

- X Surface Water (A1)
- ___ High Water Table (A2)
- ___ Saturation (A3)
- ___ Water Marks (B1)
- ___ Sediment Deposits (B2)
- ___ Drift Deposits (B3)
- ___ Algal Mat or Crust (B4)
- ___ Iron Deposits (B5)
- ___ Inundation Visible on Aerial Imagery (B7)
- X Sparsely Vegetated Concave Surface (B8)
- ___ Water-Stained Leaves (B9)
- ___ Aquatic Fauna (B13)
- ___ True Aquatic Plants (B14)
- ___ Hydrogen Sulfide Odor (C1)
- ___ Oxidized Rhizospheres on Living Roots (C3)
- ___ Presence of Reduced Iron (C4)
- ___ Recent Iron Reduction in Tilled Soils (C6)
- ___ Thin Muck Surface (C7)
- ___ Gauge or Well Data (D9)
- ___ Other (Explain in Remarks)

Secondary Indicators (minimum of two required)

- ___ Surface Soil Cracks (B6)
- ___ Drainage Patterns (B10)
- ___ Dry-Season Water Table (C2)
- ___ Crayfish Burrows (C8)
- ___ Saturation Visible on Aerial Imagery (C9)
- ___ Stunted or Stressed Plants (D1)
- X Geomorphic Position (D2)
- ___ FAC-Neutral Test (D5)

Field Observations:

Surface water present?	Yes	X	No		Depth (inches):	4
Water table present?	Yes		No	X	Depth (inches):	
Saturation present? (includes capillary fringe)	Yes		No	X	Depth (inches):	

Indicators of wetland hydrology present? Y

Describe recorded data (stream gauge, monitoring well, aerial photos, previous inspections), if available:

Remarks:

Surface water perched on top of clay soils. The water table was not observed within the 24 inch deep sample bore hole.

WETLAND DETERMINATION DATA FORM - Midwest Region

Project/Site: Crow River Heights West | City/County: Hanover/Wright | Sampling Date: 5/3/2017

Applicant/Owner: Dennis Backes | State: MN | Sampling Point: SP8-1U

Investigator(s): B.Carlson, A.Krinke, A.Cameron | Section, Township, Range: S:34 T:120N R:24W

Landform (hillslope, terrace, etc.): Hillslope | Local relief (concave, convex, none): Linear

Slope (%): 3 - 5 | Lat: | Long: | Datum:

Soil Map Unit Name: Angus-Le Sueur Complex (Predominantly Non-Hydric) | NWI Classification: None

Are climatic/hydrologic conditions of the site typical for this time of the year? Y (If no, explain in remarks)

Are vegetation ____, soil ____, or hydrology ____ significantly disturbed?

Are vegetation ____, soil ____, or hydrology ____ naturally problematic?

Are "normal circumstances" present? Yes

SUMMARY OF FINDINGS

(If needed, explain any answers in remarks.)

Hydrophytic vegetation present?	Y	**Is the sampled area within a wetland?**	N
Hydric soil present?	N		
Indicators of wetland hydrology present?	N	If yes, optional wetland site ID:	

Remarks: (Explain alternative procedures here or in a separate report.)

Precipitation from Gridded Database Method within normal range. 30-day precipitation rolling total wetter than typical.

VEGETATION -- Use scientific names of plants.

Tree Stratum (Plot size: 30 ft Radius)	Absolute % Cover	Dominant Species	Indicator Staus
1 *Fraxinus pennsylvanica*	5	Y	FACW
2			
3			
4			
5			
	5 = Total Cover		

Sapling/Shrub stratum (Plot size: 15 ft Radius)			
1			
2			
3			
4			
5			
	0 = Total Cover		

Herb stratum (Plot size: 5 ft Radius)			
1 *Poa pratensis*	50	Y	FAC
2 *Bromus inermis*	50	Y	FACU
3 *Solidago canadensis*	20	N	FACU
4			
5			
6			
7			
8			
9			
10			
	120 = Total Cover		

Woody vine stratum (Plot size: 30 ft Radius)			
1			
2			
	0 = Total Cover		

Dominance Test Worksheet

Number of Dominant Species that are OBL, FACW, or FAC: 2 (A)

Total Number of Dominant Species Across all Strata: 3 (B)

Percent of Dominant Species that are OBL, FACW, or FAC: 66.67% (A/B)

Prevalence Index Worksheet

Total % Cover of:

OBL species	0	x 1 =	0
FACW species	5	x 2 =	10
FAC species	50	x 3 =	150
FACU species	70	x 4 =	280
UPL species	0	x 5 =	0
Column totals	125 (A)		440 (B)

Prevalence Index = B/A = 3.52

Hydrophytic Vegetation Indicators:

- ___ Rapid test for hydrophytic vegetation
- X Dominance test is >50%
- ___ Prevalence index is ≤3.0*
- ___ Morphogical adaptations* (provide supporting data in Remarks or on a separate sheet)
- ___ Problematic hydrophytic vegetation* (explain)

*Indicators of hydric soil and wetland hydrology must be present, unless disturbed or problematic

Hydrophytic vegetation present? Y

Remarks: (Include photo numbers here or on a separate sheet)

Prevalence index is greater than 3.0

SOIL

Sampling Point: SP8-1U

Profile Description: (Describe to the depth needed to document the indicator or confirm the absence of indicators.)

Depth (Inches)	Matrix Color (moist)	Matrix %	Redox Features Color (moist)	Redox %	Type*	Loc**	Texture	Remarks
0-9	10YR 3/1	100					Clay Loam	
9-18	10YR 3/2	100					Sandy Clay Loam	
18-24	10YR 4/3	95	10YR 4/6	5	C	M	Sandy Clay Loam	

*Type: C = Concentration, D = Depletion, RM = Reduced Matrix, MS = Masked Sand Grains. **Location: PL = Pore Lining, M = Matrix

Hydric Soil Indicators:

- ___ Histisol (A1)
- ___ Histic Epipedon (A2)
- ___ Black Histic (A3)
- ___ Hydrogen Sulfide (A4)
- ___ Stratified Layers (A5)
- ___ 2 cm Muck (A10)
- ___ Depleted Below Dark Surface (A11)
- ___ Thick Dark Surface (A12)
- ___ Sandy Mucky Mineral (S1)
- ___ 5 cm Mucky Peat or Peat (S3)
- ___ Sandy Gleyed Matrix (S4)
- ___ Sandy Redox (S5)
- ___ Stripped Matrix (S6)
- ___ Loamy Mucky Mineral (F1)
- ___ Loamy Gleyed Matrix (F2)
- ___ Depleted Matrix (F3)
- ___ Redox Dark Surface (F6)
- ___ Depleted Dark Surface (F7)
- ___ Redox Depressions (F8)

Indicators for Problematic Hydric Soils:

- ___ Coast Prairie Redox (A16) (**LRR K, L, R**)
- ___ Dark Surface (S7) (**LRR K, L)**
- ___ Iron-Manganese Masses (F12) (**LRR K, L, R**)
- ___ Very Shallow Dark Surface (TF12)
- ___ Other (explain in remarks)

*Indicators of hydrophytic vegetation and weltand hydrology must be present, unless disturbed or problematic

Restrictive Layer (if observed):

Type: _____

Depth (inches): _____

Hydric soil present? N

Remarks:

HYDROLOGY

Wetland Hydrology Indicators:

Primary Indicators (minimum of one is required; check all that apply)

- ___ Surface Water (A1)
- ___ High Water Table (A2)
- ___ Saturation (A3)
- ___ Water Marks (B1)
- ___ Sediment Deposits (B2)
- ___ Drift Deposits (B3)
- ___ Algal Mat or Crust (B4)
- ___ Iron Deposits (B5)
- ___ Inundation Visible on Aerial Imagery (B7)
- ___ Sparsely Vegetated Concave Surface (B8)
- ___ Water-Stained Leaves (B9)
- ___ Aquatic Fauna (B13)
- ___ True Aquatic Plants (B14)
- ___ Hydrogen Sulfide Odor (C1)
- ___ Oxidized Rhizospheres on Living Roots (C3)
- ___ Presence of Reduced Iron (C4)
- ___ Recent Iron Reduction in Tilled Soils (C6)
- ___ Thin Muck Surface (C7)
- ___ Gauge or Well Data (D9)
- ___ Other (Explain in Remarks)

Secondary Indicators (minimum of two required)

- ___ Surface Soil Cracks (B6)
- ___ Drainage Patterns (B10)
- ___ Dry-Season Water Table (C2)
- ___ Crayfish Burrows (C8)
- ___ Saturation Visible on Aerial Imagery (C9)
- ___ Stunted or Stressed Plants (D1)
- ___ Geomorphic Position (D2)
- ___ FAC-Neutral Test (D5)

Field Observations:

Surface water present?	Yes		No	X	Depth (inches):	
Water table present?	Yes	X	No		Depth (inches):	22
Saturation present? (includes capillary fringe)	Yes	X	No		Depth (inches):	18

Indicators of wetland hydrology present? N

Describe recorded data (stream gauge, monitoring well, aerial photos, previous inspections), if available:

Remarks:

WETLAND DETERMINATION DATA FORM - Midwest Region

Project/Site: Crow River Heights West | City/County: Hanover/Wright | Sampling Date: 5/3/2017

Applicant/Owner: Dennis Backes | State: MN | Sampling Point: SP8-1W

Investigator(s): B.Carlson, A.Krinke, A.Cameron | Section, Township, Range: S:34 T:120N R:24W

Landform (hillslope, terrace, etc.): Slight Depression | Local relief (concave, convex, none): Concave

Slope (%): 0 - 2 | Lat: | Long: | Datum:

Soil Map Unit Name: Angus-Le Sueur Complex (Predominantly Non-Hydric) | NWI Classification: None

Are climatic/hydrologic conditions of the site typical for this time of the year? Y (If no, explain in remarks)

Are vegetation ____, soil ____, or hydrology ____ significantly disturbed?

Are vegetation ____, soil ____, or hydrology ____ naturally problematic?

Are "normal circumstances" present? Yes

SUMMARY OF FINDINGS

(If needed, explain any answers in remarks.)

Hydrophytic vegetation present?	Y	**Is the sampled area within a wetland?**	Y
Hydric soil present?	Y		
Indicators of wetland hydrology present?	Y	If yes, optional wetland site ID:	Wetland 8

Remarks: (Explain alternative procedures here or in a separate report.)

Precipitation from Gridded Database Method within normal range. 30-day precipitation rolling total wetter than typical.

VEGETATION -- Use scientific names of plants.

Tree Stratum (Plot size: 30 ft Radius)	Absolute % Cover	Dominant Species	Indicator Staus
1			
2			
3			
4			
5			
	0	= Total Cover	

Sapling/Shrub stratum (Plot size: 15 ft Radius)			
1			
2			
3			
4			
5			
	0	= Total Cover	

Herb stratum (Plot size: 5 ft Radius)			
1 *Phalaris arundinacea*	100	Y	FACW
2			
3			
4			
5			
6			
7			
8			
9			
10			
	100	= Total Cover	

Woody vine stratum (Plot size: 30 ft Radius)			
1			
2			
	0	= Total Cover	

Dominance Test Worksheet

Number of Dominant Species that are OBL, FACW, or FAC: 1 (A)

Total Number of Dominant Species Across all Strata: 1 (B)

Percent of Dominant Species that are OBL, FACW, or FAC: 100.00% (A/B)

Prevalence Index Worksheet

Total % Cover of:

OBL species	0	x 1 =	0	
FACW species	100	x 2 =	200	
FAC species	0	x 3 =	0	
FACU species	0	x 4 =	0	
UPL species	0	x 5 =	0	
Column totals	100	(A)	200	(B)

Prevalence Index = B/A = 2.00

Hydrophytic Vegetation Indicators:

- ___ Rapid test for hydrophytic vegetation
- X Dominance test is >50%
- X Prevalence index is ≤3.0*
- ___ Morphogical adaptations* (provide supporting data in Remarks or on a separate sheet)
- ___ Problematic hydrophytic vegetation* (explain)

*Indicators of hydric soil and wetland hydrology must be present, unless disturbed or problematic

Hydrophytic vegetation present? Y

Remarks: (Include photo numbers here or on a separate sheet)

SOIL

Sampling Point: SP8-1W

Profile Description: (Describe to the depth needed to document the indicator or confirm the absence of indicators.)

Depth (Inches)	Matrix Color (moist)	Matrix %	Redox Features Color (moist)	Redox %	Type*	Loc**	Texture	Remarks
0-20	10YR 2/1	100					Clay Loam	
20-24	10YR 4/2	95	10YR 4/6	5	C	M	Sandy Clay Loam	

*Type: C = Concentration, D = Depletion, RM = Reduced Matrix, MS = Masked Sand Grains. **Location: PL = Pore Lining, M = Matrix

Hydric Soil Indicators:

- ___ Histisol (A1)
- ___ Histic Epipedon (A2)
- ___ Black Histic (A3)
- ___ Hydrogen Sulfide (A4)
- ___ Stratified Layers (A5)
- ___ 2 cm Muck (A10)
- ___ Depleted Below Dark Surface (A11)
- X Thick Dark Surface (A12)
- ___ Sandy Mucky Mineral (S1)
- ___ 5 cm Mucky Peat or Peat (S3)
- ___ Sandy Gleyed Matrix (S4)
- ___ Sandy Redox (S5)
- ___ Stripped Matrix (S6)
- ___ Loamy Mucky Mineral (F1)
- ___ Loamy Gleyed Matrix (F2)
- ___ Depleted Matrix (F3)
- ___ Redox Dark Surface (F6)
- ___ Depleted Dark Surface (F7)
- ___ Redox Depressions (F8)

Indicators for Problematic Hydric Soils:

- ___ Coast Prairie Redox (A16) (**LRR K, L, R**)
- ___ Dark Surface (S7) (**LRR K, L)**
- ___ Iron-Manganese Masses (F12) (**LRR K, L, R**)
- ___ Very Shallow Dark Surface (TF12)
- ___ Other (explain in remarks)

*Indicators of hydrophytic vegetation and weltand hydrology must be present, unless disturbed or problematic

Restrictive Layer (if observed):

Type: _____

Depth (inches): _____

Hydric soil present? Y

Remarks:

HYDROLOGY

Wetland Hydrology Indicators:

Primary Indicators (minimum of one is required; check all that apply)

- X Surface Water (A1)
- X High Water Table (A2)
- X Saturation (A3)
- ___ Water Marks (B1)
- ___ Sediment Deposits (B2)
- ___ Drift Deposits (B3)
- ___ Algal Mat or Crust (B4)
- ___ Iron Deposits (B5)
- ___ Inundation Visible on Aerial Imagery (B7)
- ___ Sparsely Vegetated Concave Surface (B8)
- ___ Water-Stained Leaves (B9)
- ___ Aquatic Fauna (B13)
- ___ True Aquatic Plants (B14)
- ___ Hydrogen Sulfide Odor (C1)
- ___ Oxidized Rhizospheres on Living Roots (C3)
- ___ Presence of Reduced Iron (C4)
- ___ Recent Iron Reduction in Tilled Soils (C6)
- ___ Thin Muck Surface (C7)
- ___ Gauge or Well Data (D9)
- ___ Other (Explain in Remarks)

Secondary Indicators (minimum of two required)

- ___ Surface Soil Cracks (B6)
- ___ Drainage Patterns (B10)
- ___ Dry-Season Water Table (C2)
- ___ Crayfish Burrows (C8)
- ___ Saturation Visible on Aerial Imagery (C9)
- ___ Stunted or Stressed Plants (D1)
- X Geomorphic Position (D2)
- X FAC-Neutral Test (D5)

Field Observations:

Surface water present?	Yes	X	No	___	Depth (inches):	2
Water table present?	Yes	X	No	___	Depth (inches):	Surface
Saturation present? (includes capillary fringe)	Yes	X	No	___	Depth (inches):	Surface

Indicators of wetland hydrology present? Y

Describe recorded data (stream gauge, monitoring well, aerial photos, previous inspections), if available:

Remarks:

WETLAND DETERMINATION DATA FORM - Midwest Region

Project/Site: Crow River Heights West | City/County: Hanover/Wright | Sampling Date: 5/3/2017
Applicant/Owner: Dennis Backes | State: MN | Sampling Point: SP9-1U
Investigator(s): B.Carlson, A.Krinke, A.Cameron | Section, Township, Range: S:34 T:120N R:24W
Landform (hillslope, terrace, etc.): Hillslope | Local relief (concave, convex, none): Linear
Slope (%): 3 - 5 | Lat: | Long: | Datum:
Soil Map Unit Name: Angus-Le Sueur Complex (Predominantly Non-Hydric) | NWI Classification: None
Are climatic/hydrologic conditions of the site typical for this time of the year? Y (If no, explain in remarks)
Are vegetation ____, soil ____, or hydrology ____ significantly disturbed?
Are vegetation ____, soil ____, or hydrology ____ naturally problematic?
Are "normal circumstances" present? Yes

SUMMARY OF FINDINGS

(If needed, explain any answers in remarks.)

Hydrophytic vegetation present?	Y	**Is the sampled area within a wetland?**	N
Hydric soil present?	Y		
Indicators of wetland hydrology present?	N	If yes, optional wetland site ID:	

Remarks: (Explain alternative procedures here or in a separate report.)

Precipitation from Gridded Database Method within normal range. 30-day precipitation rolling total wetter than typical.

VEGETATION -- Use scientific names of plants.

Tree Stratum (Plot size: 30 ft Radius)	Absolute % Cover	Dominant Species	Indicator Staus
1 *Ostrya virginiana*	30	Y	FACU
2 *Tilia americana*	15	Y	FACU
3			
4			
5			
	45	= Total Cover	

Sapling/Shrub stratum (Plot size: 15 ft Radius)			
1 *Rhamnus cathartica*	20	Y	FAC
2			
3			
4			
5			
	20	= Total Cover	

Herb stratum (Plot size: 5 ft Radius)			
1 *Hydrophyllum virginianum*	20	Y	FAC
2 *Rhamnus cathartica*	10	Y	FAC
3 *Ribes americanum*	10	Y	FACW
4 *Anemone quinquefolia*	5	N	FAC
5 *Leonurus cardiaca*	5	N	UPL
6 *Arisaema triphyllum*	2	N	FACW
7			
8			
9			
10			
	52	= Total Cover	

Woody vine stratum (Plot size: 30 ft Radius)			
1			
2			
	0	= Total Cover	

Dominance Test Worksheet

Number of Dominant Species that are OBL, FACW, or FAC: 4 (A)
Total Number of Dominant Species Across all Strata: 6 (B)
Percent of Dominant Species that are OBL, FACW, or FAC: 66.67% (A/B)

Prevalence Index Worksheet

Total % Cover of:

OBL species	0	x 1 =	0	
FACW species	12	x 2 =	24	
FAC species	55	x 3 =	165	
FACU species	45	x 4 =	180	
UPL species	5	x 5 =	25	
Column totals	117	(A)	394	(B)

Prevalence Index = B/A = 3.37

Hydrophytic Vegetation Indicators:

- ___ Rapid test for hydrophytic vegetation
- X Dominance test is >50%
- ___ Prevalence index is ≤3.0*
- ___ Morphogical adaptations* (provide supporting data in Remarks or on a separate sheet)
- ___ Problematic hydrophytic vegetation* (explain)

*Indicators of hydric soil and wetland hydrology must be present, unless disturbed or problematic

Hydrophytic vegetation present? Y

Remarks: (Include photo numbers here or on a separate sheet)

SOIL

Sampling Point: SP9-1U

Profile Description: (Describe to the depth needed to document the indicator or confirm the absence of indicators.)

Depth (Inches)	Matrix Color (moist)	Matrix %	Redox Features Color (moist)	Redox %	Type*	Loc**	Texture	Remarks
0-12	10YR 2/1	100					Clay Loam	
12-24	10YR 4/1	90	10YR 4/6	10	C	M	Clay Loam	

*Type: C = Concentration, D = Depletion, RM = Reduced Matrix, MS = Masked Sand Grains. **Location: PL = Pore Lining, M = Matrix

Hydric Soil Indicators:

- ___ Histisol (A1)
- ___ Histic Epipedon (A2)
- ___ Black Histic (A3)
- ___ Hydrogen Sulfide (A4)
- ___ Stratified Layers (A5)
- ___ 2 cm Muck (A10)
- ___ Depleted Below Dark Surface (A11)
- X Thick Dark Surface (A12)
- ___ Sandy Mucky Mineral (S1)
- ___ 5 cm Mucky Peat or Peat (S3)
- ___ Sandy Gleyed Matrix (S4)
- ___ Sandy Redox (S5)
- ___ Stripped Matrix (S6)
- ___ Loamy Mucky Mineral (F1)
- ___ Loamy Gleyed Matrix (F2)
- ___ Depleted Matrix (F3)
- ___ Redox Dark Surface (F6)
- ___ Depleted Dark Surface (F7)
- ___ Redox Depressions (F8)

Indicators for Problematic Hydric Soils:

- ___ Coast Prairie Redox (A16) (**LRR K, L, R**)
- ___ Dark Surface (S7) (**LRR K, L)**
- ___ Iron-Manganese Masses (F12) (**LRR K, L, R**)
- ___ Very Shallow Dark Surface (TF12)
- ___ Other (explain in remarks)

*Indicators of hydrophytic vegetation and weltand hydrology must be present, unless disturbed or problematic

Restrictive Layer (if observed):

Type: _____

Depth (inches): _____

Hydric soil present? Y

Remarks:

HYDROLOGY

Wetland Hydrology Indicators:

Primary Indicators (minimum of one is required; check all that apply)

- ___ Surface Water (A1)
- ___ High Water Table (A2)
- ___ Saturation (A3)
- ___ Water Marks (B1)
- ___ Sediment Deposits (B2)
- ___ Drift Deposits (B3)
- ___ Algal Mat or Crust (B4)
- ___ Iron Deposits (B5)
- ___ Inundation Visible on Aerial Imagery (B7)
- ___ Sparsely Vegetated Concave Surface (B8)
- ___ Water-Stained Leaves (B9)
- ___ Aquatic Fauna (B13)
- ___ True Aquatic Plants (B14)
- ___ Hydrogen Sulfide Odor (C1)
- ___ Oxidized Rhizospheres on Living Roots (C3)
- ___ Presence of Reduced Iron (C4)
- ___ Recent Iron Reduction in Tilled Soils (C6)
- ___ Thin Muck Surface (C7)
- ___ Gauge or Well Data (D9)
- ___ Other (Explain in Remarks)

Secondary Indicators (minimum of two required)

- ___ Surface Soil Cracks (B6)
- ___ Drainage Patterns (B10)
- ___ Dry-Season Water Table (C2)
- ___ Crayfish Burrows (C8)
- ___ Saturation Visible on Aerial Imagery (C9)
- ___ Stunted or Stressed Plants (D1)
- ___ Geomorphic Position (D2)
- ___ FAC-Neutral Test (D5)

Field Observations:

Surface water present?	Yes		No	X	Depth (inches):	
Water table present?	Yes	X	No		Depth (inches):	18
Saturation present? (includes capillary fringe)	Yes	X	No		Depth (inches):	13

Indicators of wetland hydrology present? N

Describe recorded data (stream gauge, monitoring well, aerial photos, previous inspections), if available:

Remarks:

WETLAND DETERMINATION DATA FORM - Midwest Region

Project/Site: Crow River Heights West | City/County: Hanover/Wright | Sampling Date: 5/3/2017

Applicant/Owner: Dennis Backes | State: MN | Sampling Point: SP9-1W

Investigator(s): B.Carlson, A.Krinke, A.Cameron | Section, Township, Range: S:34 T:120N R:24W

Landform (hillslope, terrace, etc.): Depression | Local relief (concave, convex, none): Concave

Slope (%): 0 - 2 | Lat: | Long: | Datum:

Soil Map Unit Name: Angus-Le Sueur Complex (Predominantly Non-Hydric) | NWI Classification: None

Are climatic/hydrologic conditions of the site typical for this time of the year? Y (If no, explain in remarks)

Are vegetation ____, soil ____, or hydrology ____ significantly disturbed?

Are vegetation ____, soil ____, or hydrology ____ naturally problematic?

Are "normal circumstances" present? Yes

SUMMARY OF FINDINGS

(If needed, explain any answers in remarks.)

Hydrophytic vegetation present?	Y	**Is the sampled area within a wetland?**	Y
Hydric soil present?	Y		
Indicators of wetland hydrology present?	Y	If yes, optional wetland site ID:	Wetland 9

Remarks: (Explain alternative procedures here or in a separate report.)

Precipitation from Gridded Database Method within normal range. 30-day precipitation rolling total wetter than typical.

VEGETATION -- Use scientific names of plants.

Tree Stratum (Plot size: 30 ft Radius)	Absolute % Cover	Dominant Species	Indicator Staus
1			
2			
3			
4			
5			
	0	= Total Cover	

Sapling/Shrub stratum (Plot size: 15 ft Radius)			
1			
2			
3			
4			
5			
	0	= Total Cover	

Herb stratum (Plot size: 5 ft Radius)			
1 *Solidago gigantea*	50	Y	FACW
2 *Poa pratensis*	35	Y	FAC
3 *Fraxinus pennsylvanica*	5	N	FACW
4			
5			
6			
7			
8			
9			
10			
	90	= Total Cover	

Woody vine stratum (Plot size: 30 ft Radius)			
1			
2			
	0	= Total Cover	

Dominance Test Worksheet

Number of Dominant Species that are OBL, FACW, or FAC: 2 (A)

Total Number of Dominant Species Across all Strata: 2 (B)

Percent of Dominant Species that are OBL, FACW, or FAC: 100.00% (A/B)

Prevalence Index Worksheet

Total % Cover of:

OBL species	0	x 1 =	0	
FACW species	55	x 2 =	110	
FAC species	35	x 3 =	105	
FACU species	0	x 4 =	0	
UPL species	0	x 5 =	0	
Column totals	90	(A)	215	(B)

Prevalence Index = B/A = 2.39

Hydrophytic Vegetation Indicators:

- ___ Rapid test for hydrophytic vegetation
- X Dominance test is >50%
- X Prevalence index is ≤3.0*
- ___ Morphogical adaptations* (provide supporting data in Remarks or on a separate sheet)
- ___ Problematic hydrophytic vegetation* (explain)

*Indicators of hydric soil and wetland hydrology must be present, unless disturbed or problematic

Hydrophytic vegetation present? Y

Remarks: (Include photo numbers here or on a separate sheet)

SOIL

Sampling Point: SP9-1W

Profile Description: (Describe to the depth needed to document the indicator or confirm the absence of indicators.)

Depth (Inches)	Matrix Color (moist)	Matrix %	Redox Features Color (moist)	Redox %	Type*	Loc**	Texture	Remarks
0-6	10YR 2/1	100					Clay Loam	
6-24	10YR 4/1	95	10YR 4/6	5	C	M	Clay Loam	

*Type: C = Concentration, D = Depletion, RM = Reduced Matrix, MS = Masked Sand Grains. **Location: PL = Pore Lining, M = Matrix

Hydric Soil Indicators:

- ___ Histisol (A1)
- ___ Histic Epipedon (A2)
- ___ Black Histic (A3)
- ___ Hydrogen Sulfide (A4)
- ___ Stratified Layers (A5)
- ___ 2 cm Muck (A10)
- X Depleted Below Dark Surface (A11)
- ___ Thick Dark Surface (A12)
- ___ Sandy Mucky Mineral (S1)
- ___ 5 cm Mucky Peat or Peat (S3)
- ___ Sandy Gleyed Matrix (S4)
- ___ Sandy Redox (S5)
- ___ Stripped Matrix (S6)
- ___ Loamy Mucky Mineral (F1)
- ___ Loamy Gleyed Matrix (F2)
- ___ Depleted Matrix (F3)
- ___ Redox Dark Surface (F6)
- ___ Depleted Dark Surface (F7)
- ___ Redox Depressions (F8)

Indicators for Problematic Hydric Soils:

- ___ Coast Prairie Redox (A16) (**LRR K, L, R**)
- ___ Dark Surface (S7) (**LRR K, L**)
- ___ Iron-Manganese Masses (F12) (**LRR K, L, R**)
- ___ Very Shallow Dark Surface (TF12)
- ___ Other (explain in remarks)

*Indicators of hydrophytic vegetation and weltand hydrology must be present, unless disturbed or problematic

Restrictive Layer (if observed):

Type: _____

Depth (inches): _____

Hydric soil present? Y

Remarks:

HYDROLOGY

Wetland Hydrology Indicators:

Primary Indicators (minimum of one is required; check all that apply)

- ___ Surface Water (A1)
- X High Water Table (A2)
- X Saturation (A3)
- ___ Water Marks (B1)
- ___ Sediment Deposits (B2)
- ___ Drift Deposits (B3)
- ___ Algal Mat or Crust (B4)
- ___ Iron Deposits (B5)
- ___ Inundation Visible on Aerial Imagery (B7)
- ___ Sparsely Vegetated Concave Surface (B8)
- ___ Water-Stained Leaves (B9)
- ___ Aquatic Fauna (B13)
- ___ True Aquatic Plants (B14)
- ___ Hydrogen Sulfide Odor (C1)
- ___ Oxidized Rhizospheres on Living Roots (C3)
- ___ Presence of Reduced Iron (C4)
- ___ Recent Iron Reduction in Tilled Soils (C6)
- ___ Thin Muck Surface (C7)
- ___ Gauge or Well Data (D9)
- ___ Other (Explain in Remarks)

Secondary Indicators (minimum of two required)

- ___ Surface Soil Cracks (B6)
- ___ Drainage Patterns (B10)
- ___ Dry-Season Water Table (C2)
- ___ Crayfish Burrows (C8)
- ___ Saturation Visible on Aerial Imagery (C9)
- ___ Stunted or Stressed Plants (D1)
- X Geomorphic Position (D2)
- X FAC-Neutral Test (D5)

Field Observations:

Surface water present?	Yes	___	No	X	Depth (inches): ___
Water table present?	Yes	X	No	___	Depth (inches): Surface
Saturation present? (includes capillary fringe)	Yes	X	No	___	Depth (inches): Surface

Indicators of wetland hydrology present? Y

Describe recorded data (stream gauge, monitoring well, aerial photos, previous inspections), if available:

Remarks:

WETLAND DETERMINATION DATA FORM - Midwest Region

Project/Site: Crow River Heights West | City/County: Hanover/Wright | Sampling Date: 5/3/2017

Applicant/Owner: Dennis Backes | State: MN | Sampling Point: SP10-1U

Investigator(s): B.Carlson, A.Krinke, A.Cameron | Section, Township, Range: S:34 T:120N R:24W

Landform (hillslope, terrace, etc.): Hillslope | Local relief (concave, convex, none): Linear

Slope (%): 3 - 5 | Lat: | Long: | Datum:

Soil Map Unit Name: Angus-Le Sueur Complex (Predominantly Non-Hydric) | NWI Classification: None

Are climatic/hydrologic conditions of the site typical for this time of the year? Y (If no, explain in remarks)

Are vegetation ____, soil ____, or hydrology ____ significantly disturbed?

Are vegetation ____, soil ____, or hydrology ____ naturally problematic?

Are "normal circumstances" present? Yes

SUMMARY OF FINDINGS

(If needed, explain any answers in remarks.)

Hydrophytic vegetation present?	N	**Is the sampled area within a wetland?**	N
Hydric soil present?	N		
Indicators of wetland hydrology present?	N	If yes, optional wetland site ID:	

Remarks: (Explain alternative procedures here or in a separate report.)

Precipitation from Gridded Database Method within normal range. 30-day precipitation rolling total wetter than typical.

VEGETATION -- Use scientific names of plants.

Tree Stratum (Plot size: 30 ft Radius)	Absolute % Cover	Dominant Species	Indicator Staus
1			
2			
3			
4			
5			
	0	= Total Cover	

Sapling/Shrub stratum (Plot size: 15 ft Radius)	Absolute % Cover	Dominant Species	Indicator Staus
1 *Prunus serotina*	5	Y	FACU
2			
3			
4			
5			
	5	= Total Cover	

Herb stratum (Plot size: 5 ft Radius)	Absolute % Cover	Dominant Species	Indicator Staus
1 *Poa pratensis*	90	Y	FAC
2 *Solidago canadensis*	30	Y	FACU
3 *Bromus inermis*	10	N	FACU
4			
5			
6			
7			
8			
9			
10			
	130	= Total Cover	

Woody vine stratum (Plot size: 30 ft Radius)	Absolute % Cover	Dominant Species	Indicator Staus
1			
2			
	0	= Total Cover	

Dominance Test Worksheet

Number of Dominant Species that are OBL, FACW, or FAC: 1 (A)

Total Number of Dominant Species Across all Strata: 3 (B)

Percent of Dominant Species that are OBL, FACW, or FAC: 33.33% (A/B)

Prevalence Index Worksheet

Total % Cover of:

OBL species	0	x 1 =	0	
FACW species	0	x 2 =	0	
FAC species	90	x 3 =	270	
FACU species	45	x 4 =	180	
UPL species	0	x 5 =	0	
Column totals	135	(A)	450	(B)

Prevalence Index = B/A = 3.33

Hydrophytic Vegetation Indicators:

- ___ Rapid test for hydrophytic vegetation
- ___ Dominance test is >50%
- ___ Prevalence index is ≤3.0*
- ___ Morphogical adaptations* (provide supporting data in Remarks or on a separate sheet)
- ___ Problematic hydrophytic vegetation* (explain)

*Indicators of hydric soil and wetland hydrology must be present, unless disturbed or problematic

Hydrophytic vegetation present? N

Remarks: (Include photo numbers here or on a separate sheet)

SOIL

Sampling Point: SP10-1U

Profile Description: (Describe to the depth needed to document the indicator or confirm the absence of indicators.)

Depth (Inches)	Matrix Color (moist)	Matrix %	Redox Features Color (moist)	Redox %	Type*	Loc**	Texture	Remarks
0-8	10YR 3/1	100					Clay Loam	
8-16	10YR 3/2	100					Sandy Clay Loam	
16-24	10YR 4/3	95	10YR 4/6	5	C	M	Sandy Clay Loam	

*Type: C = Concentration, D = Depletion, RM = Reduced Matrix, MS = Masked Sand Grains. **Location: PL = Pore Lining, M = Matrix

Hydric Soil Indicators:

- ___ Histisol (A1)
- ___ Histic Epipedon (A2)
- ___ Black Histic (A3)
- ___ Hydrogen Sulfide (A4)
- ___ Stratified Layers (A5)
- ___ 2 cm Muck (A10)
- ___ Depleted Below Dark Surface (A11)
- ___ Thick Dark Surface (A12)
- ___ Sandy Mucky Mineral (S1)
- ___ 5 cm Mucky Peat or Peat (S3)
- ___ Sandy Gleyed Matrix (S4)
- ___ Sandy Redox (S5)
- ___ Stripped Matrix (S6)
- ___ Loamy Mucky Mineral (F1)
- ___ Loamy Gleyed Matrix (F2)
- ___ Depleted Matrix (F3)
- ___ Redox Dark Surface (F6)
- ___ Depleted Dark Surface (F7)
- ___ Redox Depressions (F8)

Indicators for Problematic Hydric Soils:

- ___ Coast Prairie Redox (A16) (**LRR K, L, R**)
- ___ Dark Surface (S7) (**LRR K, L)**
- ___ Iron-Manganese Masses (F12) (**LRR K, L, R**)
- ___ Very Shallow Dark Surface (TF12)
- ___ Other (explain in remarks)

*Indicators of hydrophytic vegetation and weltand hydrology must be present, unless disturbed or problematic

Restrictive Layer (if observed):

Type: _____

Depth (inches): _____

Hydric soil present? N

Remarks:

HYDROLOGY

Wetland Hydrology Indicators:

Primary Indicators (minimum of one is required; check all that apply)

- ___ Surface Water (A1)
- ___ High Water Table (A2)
- ___ Saturation (A3)
- ___ Water Marks (B1)
- ___ Sediment Deposits (B2)
- ___ Drift Deposits (B3)
- ___ Algal Mat or Crust (B4)
- ___ Iron Deposits (B5)
- ___ Inundation Visible on Aerial Imagery (B7)
- ___ Sparsely Vegetated Concave Surface (B8)
- ___ Water-Stained Leaves (B9)
- ___ Aquatic Fauna (B13)
- ___ True Aquatic Plants (B14)
- ___ Hydrogen Sulfide Odor (C1)
- ___ Oxidized Rhizospheres on Living Roots (C3)
- ___ Presence of Reduced Iron (C4)
- ___ Recent Iron Reduction in Tilled Soils (C6)
- ___ Thin Muck Surface (C7)
- ___ Gauge or Well Data (D9)
- ___ Other (Explain in Remarks)

Secondary Indicators (minimum of two required)

- ___ Surface Soil Cracks (B6)
- ___ Drainage Patterns (B10)
- ___ Dry-Season Water Table (C2)
- ___ Crayfish Burrows (C8)
- ___ Saturation Visible on Aerial Imagery (C9)
- ___ Stunted or Stressed Plants (D1)
- ___ Geomorphic Position (D2)
- ___ FAC-Neutral Test (D5)

Field Observations:

Surface water present?	Yes		No	X	Depth (inches):	
Water table present?	Yes	X	No		Depth (inches):	22
Saturation present? (includes capillary fringe)	Yes	X	No		Depth (inches):	18

Indicators of wetland hydrology present? N

Describe recorded data (stream gauge, monitoring well, aerial photos, previous inspections), if available:

Remarks:

WETLAND DETERMINATION DATA FORM - Midwest Region

Project/Site: Crow River Heights West | City/County: Hanover/Wright | Sampling Date: 5/3/2017

Applicant/Owner: Dennis Backes | State: MN | Sampling Point: SP10-1W

Investigator(s): B.Carlson, A.Krinke, A.Cameron | Section, Township, Range: S:34 T:120N R:24W

Landform (hillslope, terrace, etc.): Depression | Local relief (concave, convex, none): Concave

Slope (%): 0 - 2 | Lat: | Long: | Datum:

Soil Map Unit Name: Angus Le-Sueur Complex (Predominantly Non-Hydric) | NWI Classification: None

Are climatic/hydrologic conditions of the site typical for this time of the year? Y (If no, explain in remarks)

Are vegetation ____, soil ____, or hydrology ____ significantly disturbed?

Are vegetation ____, soil ____, or hydrology ____ naturally problematic?

Are "normal circumstances" present? Yes

SUMMARY OF FINDINGS

(If needed, explain any answers in remarks.)

Hydrophytic vegetation present?	Y	**Is the sampled area within a wetland?**	Y
Hydric soil present?	Y		
Indicators of wetland hydrology present?	Y	If yes, optional wetland site ID:	Wetland 10

Remarks: (Explain alternative procedures here or in a separate report.)

Precipitation from Gridded Database Method within normal range. 30-day precipitation rolling total wetter than typical.

VEGETATION -- Use scientific names of plants.

Tree Stratum (Plot size: 30 ft Radius)	Absolute % Cover	Dominant Species	Indicator Staus
1			
2			
3			
4			
5			
	0	= Total Cover	

Sapling/Shrub stratum (Plot size: 15 ft Radius)			
1			
2			
3			
4			
5			
	0	= Total Cover	

Herb stratum (Plot size: 5 ft Radius)			
1 *Poa pratensis*	100	Y	FAC
2 *Phalaris arundinacea*	20	N	FACW
3 *Carex stricta*	10	N	OBL
4			
5			
6			
7			
8			
9			
10			
	130	= Total Cover	

Woody vine stratum (Plot size: 30 ft Radius)			
1			
2			
	0	= Total Cover	

Dominance Test Worksheet

Number of Dominant Species that are OBL, FACW, or FAC: 1 (A)

Total Number of Dominant Species Across all Strata: 1 (B)

Percent of Dominant Species that are OBL, FACW, or FAC: 100.00% (A/B)

Prevalence Index Worksheet

Total % Cover of:

OBL species	10	x 1 =	10	
FACW species	20	x 2 =	40	
FAC species	100	x 3 =	300	
FACU species	0	x 4 =	0	
UPL species	0	x 5 =	0	
Column totals	130	(A)	350	(B)

Prevalence Index = B/A = 2.69

Hydrophytic Vegetation Indicators:

- ___ Rapid test for hydrophytic vegetation
- X Dominance test is >50%
- X Prevalence index is ≤3.0*
- ___ Morphogical adaptations* (provide supporting data in Remarks or on a separate sheet)
- ___ Problematic hydrophytic vegetation* (explain)

*Indicators of hydric soil and wetland hydrology must be present, unless disturbed or problematic

Hydrophytic vegetation present? Y

Remarks: (Include photo numbers here or on a separate sheet)

SOIL

Sampling Point: SP10-1W

Profile Description: (Describe to the depth needed to document the indicator or confirm the absence of indicators.)

Depth (Inches)	Matrix Color (moist)	Matrix %	Redox Features Color (moist)	Redox %	Type*	Loc**	Texture	Remarks
0-16	10YR 4/1	95	10YR 4/6	5	C	M	Clay Loam	
16-24	10YR 4/2	95	10YR 4/6	5	C	M	Sandy Clay Loam	

*Type: C = Concentration, D = Depletion, RM = Reduced Matrix, MS = Masked Sand Grains. **Location: PL = Pore Lining, M = Matrix

Hydric Soil Indicators:

- ___ Histisol (A1)
- ___ Histic Epipedon (A2)
- ___ Black Histic (A3)
- ___ Hydrogen Sulfide (A4)
- ___ Stratified Layers (A5)
- ___ 2 cm Muck (A10)
- ___ Depleted Below Dark Surface (A11)
- ___ Thick Dark Surface (A12)
- ___ Sandy Mucky Mineral (S1)
- ___ 5 cm Mucky Peat or Peat (S3)
- ___ Sandy Gleyed Matrix (S4)
- ___ Sandy Redox (S5)
- ___ Stripped Matrix (S6)
- ___ Loamy Mucky Mineral (F1)
- ___ Loamy Gleyed Matrix (F2)
- X Depleted Matrix (F3)
- ___ Redox Dark Surface (F6)
- ___ Depleted Dark Surface (F7)
- ___ Redox Depressions (F8)

Indicators for Problematic Hydric Soils:

- ___ Coast Prairie Redox (A16) (**LRR K, L, R**)
- ___ Dark Surface (S7) (**LRR K, L)**
- ___ Iron-Manganese Masses (F12) (**LRR K, L, R**)
- ___ Very Shallow Dark Surface (TF12)
- ___ Other (explain in remarks)

*Indicators of hydrophytic vegetation and weltand hydrology must be present, unless disturbed or problematic

Restrictive Layer (if observed):

Type: _____

Depth (inches): _____

Hydric soil present? Y

Remarks:

HYDROLOGY

Wetland Hydrology Indicators:

Primary Indicators (minimum of one is required; check all that apply)

- ___ Surface Water (A1)
- X High Water Table (A2)
- X Saturation (A3)
- ___ Water Marks (B1)
- ___ Sediment Deposits (B2)
- ___ Drift Deposits (B3)
- ___ Algal Mat or Crust (B4)
- ___ Iron Deposits (B5)
- ___ Inundation Visible on Aerial Imagery (B7)
- ___ Sparsely Vegetated Concave Surface (B8)
- ___ Water-Stained Leaves (B9)
- ___ Aquatic Fauna (B13)
- ___ True Aquatic Plants (B14)
- ___ Hydrogen Sulfide Odor (C1)
- ___ Oxidized Rhizospheres on Living Roots (C3)
- ___ Presence of Reduced Iron (C4)
- ___ Recent Iron Reduction in Tilled Soils (C6)
- ___ Thin Muck Surface (C7)
- ___ Gauge or Well Data (D9)
- ___ Other (Explain in Remarks)

Secondary Indicators (minimum of two required)

- ___ Surface Soil Cracks (B6)
- ___ Drainage Patterns (B10)
- ___ Dry-Season Water Table (C2)
- ___ Crayfish Burrows (C8)
- ___ Saturation Visible on Aerial Imagery (C9)
- ___ Stunted or Stressed Plants (D1)
- X Geomorphic Position (D2)
- X FAC-Neutral Test (D5)

Field Observations:

Surface water present?	Yes	___	No	X	Depth (inches):	___
Water table present?	Yes	X	No	___	Depth (inches):	Surface
Saturation present? (includes capillary fringe)	Yes	X	No	___	Depth (inches):	Surface

Indicators of wetland hydrology present? Y

Describe recorded data (stream gauge, monitoring well, aerial photos, previous inspections), if available:

Remarks:

WETLAND DETERMINATION DATA FORM - Midwest Region

Project/Site: Crow River Heights West | City/County: Hanover/Wright | Sampling Date: 5/3/2017

Applicant/Owner: Dennis Backes | State: MN | Sampling Point: SP11-1U

Investigator(s): B.Carlson, A.Krinke, A.Cameron | Section, Township, Range: S:34 T:120N R:24W

Landform (hillslope, terrace, etc.): Hillslope | Local relief (concave, convex, none): Linear

Slope (%): 3 - 5 | Lat: | Long: | Datum:

Soil Map Unit Name: Angus-Cordova Complex (Partially Hydric) | NWI Classification: None

Are climatic/hydrologic conditions of the site typical for this time of the year? Y (If no, explain in remarks)

Are vegetation ____, soil X, or hydrology ____ significantly disturbed?

Are vegetation ____, soil ____, or hydrology ____ naturally problematic?

Are "normal circumstances" present? No

SUMMARY OF FINDINGS

(If needed, explain any answers in remarks.)

Hydrophytic vegetation present?	Y	**Is the sampled area within a wetland?**	N
Hydric soil present?	Y		
Indicators of wetland hydrology present?	N	If yes, optional wetland site ID:	

Remarks: (Explain alternative procedures here or in a separate report.)

Precipitation from Gridded Database Method within normal range. 30-day precipitation rolling total wetter than typical. Soils in this area had been disturbed due to grading of the site.

VEGETATION -- Use scientific names of plants.

Tree Stratum (Plot size: 30 ft Radius)	Absolute % Cover	Dominant Species	Indicator Staus
1			
2			
3			
4			
5			
	0	= Total Cover	

Sapling/Shrub stratum (Plot size: 15 ft Radius)	Absolute % Cover	Dominant Species	Indicator Staus
1 *Juniperus virginiana*	5	Y	FACU
2 *Fraxinus pennsylvanica*	5	Y	FACW
3			
4			
5			
	10	= Total Cover	

Herb stratum (Plot size: 5 ft Radius)	Absolute % Cover	Dominant Species	Indicator Staus
1 *Poa pratensis*	80	Y	FAC
2 *Digitaria ischaemum*	15	N	FACU
3 *Solidago canadensis*	10	N	FACU
4			
5			
6			
7			
8			
9			
10			
	105	= Total Cover	

Woody vine stratum (Plot size: 30 ft Radius)	Absolute % Cover	Dominant Species	Indicator Staus
1			
2			
	0	= Total Cover	

Dominance Test Worksheet

Number of Dominant Species that are OBL, FACW, or FAC: 2 (A)

Total Number of Dominant Species Across all Strata: 3 (B)

Percent of Dominant Species that are OBL, FACW, or FAC: 66.67% (A/B)

Prevalence Index Worksheet

Total % Cover of:

OBL species	0	x 1 =	0	
FACW species	5	x 2 =	10	
FAC species	80	x 3 =	240	
FACU species	30	x 4 =	120	
UPL species	0	x 5 =	0	
Column totals	115	(A)	370	(B)

Prevalence Index = B/A = 3.22

Hydrophytic Vegetation Indicators:

- ___ Rapid test for hydrophytic vegetation
- X Dominance test is >50%
- ___ Prevalence index is ≤3.0*
- ___ Morphogical adaptations* (provide supporting data in Remarks or on a separate sheet)
- ___ Problematic hydrophytic vegetation* (explain)

*Indicators of hydric soil and wetland hydrology must be present, unless disturbed or problematic

Hydrophytic vegetation present? Y

Remarks: (Include photo numbers here or on a separate sheet)

SOIL

Sampling Point: SP11-1U

Profile Description: (Describe to the depth needed to document the indicator or confirm the absence of indicators.)

Depth (Inches)	Matrix Color (moist)	Matrix %	Redox Features Color (moist)	Redox %	Type*	Loc**	Texture	Remarks
0-10	10YR 2/1	100					Clay Loam	
10-24	10YR 4/1	95	10YR 4/6	5	C	M	Clay Loam	

*Type: C = Concentration, D = Depletion, RM = Reduced Matrix, MS = Masked Sand Grains. **Location: PL = Pore Lining, M = Matrix

Hydric Soil Indicators:

- ___ Histisol (A1)
- ___ Histic Epipedon (A2)
- ___ Black Histic (A3)
- ___ Hydrogen Sulfide (A4)
- ___ Stratified Layers (A5)
- ___ 2 cm Muck (A10)
- X Depleted Below Dark Surface (A11)
- ___ Thick Dark Surface (A12)
- ___ Sandy Mucky Mineral (S1)
- ___ 5 cm Mucky Peat or Peat (S3)
- ___ Sandy Gleyed Matrix (S4)
- ___ Sandy Redox (S5)
- ___ Stripped Matrix (S6)
- ___ Loamy Mucky Mineral (F1)
- ___ Loamy Gleyed Matrix (F2)
- ___ Depleted Matrix (F3)
- ___ Redox Dark Surface (F6)
- ___ Depleted Dark Surface (F7)
- ___ Redox Depressions (F8)

Indicators for Problematic Hydric Soils:

- ___ Coast Prairie Redox (A16) (**LRR K, L, R**)
- ___ Dark Surface (S7) (**LRR K, L)**
- ___ Iron-Manganese Masses (F12) (**LRR K, L, R**)
- ___ Very Shallow Dark Surface (TF12)
- ___ Other (explain in remarks)

*Indicators of hydrophytic vegetation and weltand hydrology must be present, unless disturbed or problematic

Restrictive Layer (if observed):

Type: _____

Depth (inches): _____

Hydric soil present? Y

Remarks:

HYDROLOGY

Wetland Hydrology Indicators:

Primary Indicators (minimum of one is required; check all that apply)

- ___ Surface Water (A1)
- ___ High Water Table (A2)
- ___ Saturation (A3)
- ___ Water Marks (B1)
- ___ Sediment Deposits (B2)
- ___ Drift Deposits (B3)
- ___ Algal Mat or Crust (B4)
- ___ Iron Deposits (B5)
- ___ Inundation Visible on Aerial Imagery (B7)
- ___ Sparsely Vegetated Concave Surface (B8)
- ___ Water-Stained Leaves (B9)
- ___ Aquatic Fauna (B13)
- ___ True Aquatic Plants (B14)
- ___ Hydrogen Sulfide Odor (C1)
- ___ Oxidized Rhizospheres on Living Roots (C3)
- ___ Presence of Reduced Iron (C4)
- ___ Recent Iron Reduction in Tilled Soils (C6)
- ___ Thin Muck Surface (C7)
- ___ Gauge or Well Data (D9)
- ___ Other (Explain in Remarks)

Secondary Indicators (minimum of two required)

- ___ Surface Soil Cracks (B6)
- ___ Drainage Patterns (B10)
- ___ Dry-Season Water Table (C2)
- ___ Crayfish Burrows (C8)
- ___ Saturation Visible on Aerial Imagery (C9)
- ___ Stunted or Stressed Plants (D1)
- ___ Geomorphic Position (D2)
- ___ FAC-Neutral Test (D5)

Field Observations:

Surface water present?	Yes	___	No	X	Depth (inches): ___
Water table present?	Yes	___	No	X	Depth (inches): ___
Saturation present? (includes capillary fringe)	Yes	___	No	X	Depth (inches): ___

Indicators of wetland hydrology present? N

Describe recorded data (stream gauge, monitoring well, aerial photos, previous inspections), if available:

Remarks:

WETLAND DETERMINATION DATA FORM - Midwest Region

Project/Site: Crow River Heights West | City/County: Hanover/Wright | Sampling Date: 5/3/2017

Applicant/Owner: Dennis Backes | State: MN | Sampling Point: SP11-1W

Investigator(s): B.Carlson, A.Krinke, A.Cameron | Section, Township, Range: S:34 T:120N R:24W

Landform (hillslope, terrace, etc.): Depression | Local relief (concave, convex, none): Concave

Slope (%): 0 - 2 | Lat: | Long: | Datum:

Soil Map Unit Name: Glencoe Clay Loam (Hydric) | NWI Classification: PEM1A/PEM1C

Are climatic/hydrologic conditions of the site typical for this time of the year? Y (If no, explain in remarks)

Are vegetation ____, soil ____, or hydrology X significantly disturbed? Are "normal circumstances" present? No

Are vegetation ____, soil ____, or hydrology ____ naturally problematic?

SUMMARY OF FINDINGS

(If needed, explain any answers in remarks.)

Hydrophytic vegetation present?	Y	**Is the sampled area within a wetland?**	Y
Hydric soil present?	Y		
Indicators of wetland hydrology present?	Y	If yes, optional wetland site ID:	Wetland 11

Remarks: (Explain alternative procedures here or in a separate report.)

Precipitation from Gridded Database Method within normal range. 30-day precipitation rolling total wetter than typical. Hydrology in this area had been disturbed due to adjacent grading of the site.

VEGETATION -- Use scientific names of plants.

Tree Stratum (Plot size: 30 ft Radius)	Absolute % Cover	Dominant Species	Indicator Staus
1			
2			
3			
4			
5			
	0	= Total Cover	

Sapling/Shrub stratum (Plot size: 15 ft Radius)			
1 *Fraxinus pennsylvanica*	5	Y	FACW
2			
3			
4			
5			
	5	= Total Cover	

Herb stratum (Plot size: 5 ft Radius)			
1 *Phalaris arundinacea*	100	Y	FACW
2			
3			
4			
5			
6			
7			
8			
9			
10			
	100	= Total Cover	

Woody vine stratum (Plot size: 30 ft Radius)			
1			
2			
	0	= Total Cover	

Dominance Test Worksheet

Number of Dominant Species that are OBL, FACW, or FAC: 2 (A)

Total Number of Dominant Species Across all Strata: 2 (B)

Percent of Dominant Species that are OBL, FACW, or FAC: 100.00% (A/B)

Prevalence Index Worksheet

Total % Cover of:

OBL species	0	x 1 =	0
FACW species	105	x 2 =	210
FAC species	0	x 3 =	0
FACU species	0	x 4 =	0
UPL species	0	x 5 =	0
Column totals	105 (A)		210 (B)

Prevalence Index = B/A = 2.00

Hydrophytic Vegetation Indicators:

- ___ Rapid test for hydrophytic vegetation
- X Dominance test is >50%
- X Prevalence index is ≤3.0*
- ___ Morphogical adaptations* (provide supporting data in Remarks or on a separate sheet)
- ___ Problematic hydrophytic vegetation* (explain)

*Indicators of hydric soil and wetland hydrology must be present, unless disturbed or problematic

Hydrophytic vegetation present? Y

Remarks: (Include photo numbers here or on a separate sheet)

SOIL

Sampling Point: SP11-1W

Profile Description: (Describe to the depth needed to document the indicator or confirm the absence of indicators.)

Depth (Inches)	Matrix Color (moist)	Matrix %	Redox Features Color (moist)	Redox %	Type*	Loc**	Texture	Remarks
0-18	10YR 2/1	100					Clay Loam	
18-24	10YR 4/1	95	10YR 4/6	5	C	M	Clay Loam	

*Type: C = Concentration, D = Depletion, RM = Reduced Matrix, MS = Masked Sand Grains. **Location: PL = Pore Lining, M = Matrix

Hydric Soil Indicators:

- ___ Histisol (A1)
- ___ Histic Epipedon (A2)
- ___ Black Histic (A3)
- ___ Hydrogen Sulfide (A4)
- ___ Stratified Layers (A5)
- ___ 2 cm Muck (A10)
- ___ Depleted Below Dark Surface (A11)
- X Thick Dark Surface (A12)
- ___ Sandy Mucky Mineral (S1)
- ___ 5 cm Mucky Peat or Peat (S3)
- ___ Sandy Gleyed Matrix (S4)
- ___ Sandy Redox (S5)
- ___ Stripped Matrix (S6)
- ___ Loamy Mucky Mineral (F1)
- ___ Loamy Gleyed Matrix (F2)
- ___ Depleted Matrix (F3)
- ___ Redox Dark Surface (F6)
- ___ Depleted Dark Surface (F7)
- ___ Redox Depressions (F8)

Indicators for Problematic Hydric Soils:

- ___ Coast Prairie Redox (A16) (**LRR K, L, R**)
- ___ Dark Surface (S7) (**LRR K, L)**
- ___ Iron-Manganese Masses (F12) (**LRR K, L, R**)
- ___ Very Shallow Dark Surface (TF12)
- ___ Other (explain in remarks)

*Indicators of hydrophytic vegetation and weltand hydrology must be present, unless disturbed or problematic

Restrictive Layer (if observed):

Type: _____

Depth (inches): _____

Hydric soil present? Y

Remarks:

HYDROLOGY

Wetland Hydrology Indicators:

Primary Indicators (minimum of one is required; check all that apply)

- ___ Surface Water (A1)
- X High Water Table (A2)
- X Saturation (A3)
- ___ Water Marks (B1)
- ___ Sediment Deposits (B2)
- ___ Drift Deposits (B3)
- ___ Algal Mat or Crust (B4)
- ___ Iron Deposits (B5)
- ___ Inundation Visible on Aerial Imagery (B7)
- ___ Sparsely Vegetated Concave Surface (B8)
- ___ Water-Stained Leaves (B9)
- ___ Aquatic Fauna (B13)
- ___ True Aquatic Plants (B14)
- ___ Hydrogen Sulfide Odor (C1)
- ___ Oxidized Rhizospheres on Living Roots (C3)
- ___ Presence of Reduced Iron (C4)
- ___ Recent Iron Reduction in Tilled Soils (C6)
- ___ Thin Muck Surface (C7)
- ___ Gauge or Well Data (D9)
- ___ Other (Explain in Remarks)

Secondary Indicators (minimum of two required)

- ___ Surface Soil Cracks (B6)
- ___ Drainage Patterns (B10)
- ___ Dry-Season Water Table (C2)
- ___ Crayfish Burrows (C8)
- ___ Saturation Visible on Aerial Imagery (C9)
- ___ Stunted or Stressed Plants (D1)
- X Geomorphic Position (D2)
- X FAC-Neutral Test (D5)

Field Observations:

Surface water present?	Yes	___	No	X	Depth (inches): ___
Water table present?	Yes	X	No	___	Depth (inches): 2
Saturation present? (includes capillary fringe)	Yes	X	No	___	Depth (inches): Surface

Indicators of wetland hydrology present? Y

Describe recorded data (stream gauge, monitoring well, aerial photos, previous inspections), if available:

Remarks:

WETLAND DETERMINATION DATA FORM - Midwest Region

Project/Site: Crow River Heights West | City/County: Hanover/Wright | Sampling Date: 5/3/2017

Applicant/Owner: Dennis Backes | State: MN | Sampling Point: SP12-1U

Investigator(s): B.Carlson, A.Krinke, A.Cameron | Section, Township, Range: S:34 T:120N R:24W

Landform (hillslope, terrace, etc.): Hillslope | Local relief (concave, convex, none): Linear

Slope (%): 3 - 5 | Lat: | Long: | Datum:

Soil Map Unit Name: Angus-Cordova Complex (Partially Hydric) | NWI Classification: None

Are climatic/hydrologic conditions of the site typical for this time of the year? Y (If no, explain in remarks)

Are vegetation ____, soil X, or hydrology ____ significantly disturbed?

Are vegetation ____, soil ____, or hydrology ____ naturally problematic?

Are "normal circumstances" present? No

SUMMARY OF FINDINGS

(If needed, explain any answers in remarks.)

Hydrophytic vegetation present?	N	**Is the sampled area within a wetland?**	N
Hydric soil present?	Y		
Indicators of wetland hydrology present?	N	If yes, optional wetland site ID:	

Remarks: (Explain alternative procedures here or in a separate report.)

Precipitation from Gridded Database Method within normal range. 30-day precipitation rolling total wetter than typical. Soils in this area had been disturbed due to grading of the site.

VEGETATION -- Use scientific names of plants.

Tree Stratum (Plot size: 30 ft Radius)	Absolute % Cover	Dominant Species	Indicator Staus
1			
2			
3			
4			
5			
	0	= Total Cover	

Sapling/Shrub stratum (Plot size: 15 ft Radius)			
1			
2			
3			
4			
5			
	0	= Total Cover	

Herb stratum (Plot size: 5 ft Radius)			
1 *Poa pratensis*	80	Y	FAC
2 *Solidago canadensis*	20	Y	FACU
3			
4			
5			
6			
7			
8			
9			
10			
	100	= Total Cover	

Woody vine stratum (Plot size: 30 ft Radius)			
1			
2			
	0	= Total Cover	

Dominance Test Worksheet

Number of Dominant Species that are OBL, FACW, or FAC: 1 (A)

Total Number of Dominant Species Across all Strata: 2 (B)

Percent of Dominant Species that are OBL, FACW, or FAC: 50.00% (A/B)

Prevalence Index Worksheet

Total % Cover of:

OBL species	0	x 1 =	0	
FACW species	0	x 2 =	0	
FAC species	80	x 3 =	240	
FACU species	20	x 4 =	80	
UPL species	0	x 5 =	0	
Column totals	100	(A)	320	(B)

Prevalence Index = B/A = 3.20

Hydrophytic Vegetation Indicators:

- ___ Rapid test for hydrophytic vegetation
- ___ Dominance test is >50%
- ___ Prevalence index is ≤3.0*
- ___ Morphogical adaptations* (provide supporting data in Remarks or on a separate sheet)
- ___ Problematic hydrophytic vegetation* (explain)

*Indicators of hydric soil and wetland hydrology must be present, unless disturbed or problematic

Hydrophytic vegetation present? N

Remarks: (Include photo numbers here or on a separate sheet)

SOIL

Sampling Point: SP12-1U

Profile Description: (Describe to the depth needed to document the indicator or confirm the absence of indicators.)

Depth (Inches)	Matrix Color (moist)	Matrix %	Redox Features Color (moist)	Redox %	Type*	Loc**	Texture	Remarks
0-6	10YR 3/2	100					Loam	
6-13	2.5Y 4/2	70	10YR 4/6	10	C	M	Sandy Clay Loam	
	10YR 3/2	20					Sandy Clay Loam	
13-25	10YR 4/1	90	10YR 4/6	10	C	M	Loam	

*Type: C = Concentration, D = Depletion, RM = Reduced Matrix, MS = Masked Sand Grains. **Location: PL = Pore Lining, M = Matrix

Hydric Soil Indicators:

- ___ Histisol (A1)
- ___ Histic Epipedon (A2)
- ___ Black Histic (A3)
- ___ Hydrogen Sulfide (A4)
- ___ Stratified Layers (A5)
- ___ 2 cm Muck (A10)
- X Depleted Below Dark Surface (A11)
- ___ Thick Dark Surface (A12)
- ___ Sandy Mucky Mineral (S1)
- ___ 5 cm Mucky Peat or Peat (S3)
- ___ Sandy Gleyed Matrix (S4)
- ___ Sandy Redox (S5)
- ___ Stripped Matrix (S6)
- ___ Loamy Mucky Mineral (F1)
- ___ Loamy Gleyed Matrix (F2)
- ___ Depleted Matrix (F3)
- ___ Redox Dark Surface (F6)
- ___ Depleted Dark Surface (F7)
- ___ Redox Depressions (F8)

Indicators for Problematic Hydric Soils:

- ___ Coast Prairie Redox (A16) (**LRR K, L, R**)
- ___ Dark Surface (S7) (**LRR K, L)**
- ___ Iron-Manganese Masses (F12) (**LRR K, L, R**)
- ___ Very Shallow Dark Surface (TF12)
- ___ Other (explain in remarks)

*Indicators of hydrophytic vegetation and weltand hydrology must be present, unless disturbed or problematic

Restrictive Layer (if observed):

Type: _____

Depth (inches): _____

Hydric soil present? Y

Remarks:

HYDROLOGY

Wetland Hydrology Indicators:

Primary Indicators (minimum of one is required; check all that apply)

- ___ Surface Water (A1)
- ___ High Water Table (A2)
- ___ Saturation (A3)
- ___ Water Marks (B1)
- ___ Sediment Deposits (B2)
- ___ Drift Deposits (B3)
- ___ Algal Mat or Crust (B4)
- ___ Iron Deposits (B5)
- ___ Inundation Visible on Aerial Imagery (B7)
- ___ Sparsely Vegetated Concave Surface (B8)
- ___ Water-Stained Leaves (B9)
- ___ Aquatic Fauna (B13)
- ___ True Aquatic Plants (B14)
- ___ Hydrogen Sulfide Odor (C1)
- ___ Oxidized Rhizospheres on Living Roots (C3)
- ___ Presence of Reduced Iron (C4)
- ___ Recent Iron Reduction in Tilled Soils (C6)
- ___ Thin Muck Surface (C7)
- ___ Gauge or Well Data (D9)
- ___ Other (Explain in Remarks)

Secondary Indicators (minimum of two required)

- ___ Surface Soil Cracks (B6)
- ___ Drainage Patterns (B10)
- ___ Dry-Season Water Table (C2)
- ___ Crayfish Burrows (C8)
- ___ Saturation Visible on Aerial Imagery (C9)
- ___ Stunted or Stressed Plants (D1)
- ___ Geomorphic Position (D2)
- ___ FAC-Neutral Test (D5)

Field Observations:

Surface water present?	Yes	___	No	X	Depth (inches):	___
Water table present?	Yes	___	No	X	Depth (inches):	___
Saturation present? (includes capillary fringe)	Yes	___	No	X	Depth (inches):	___

Indicators of wetland hydrology present? N

Describe recorded data (stream gauge, monitoring well, aerial photos, previous inspections), if available:

Remarks:

WETLAND DETERMINATION DATA FORM - Midwest Region

Project/Site: Crow River Heights West | City/County: Hanover/Wright | Sampling Date: 5/3/2017

Applicant/Owner: Dennis Backes | State: MN | Sampling Point: SP12-1W

Investigator(s): B.Carlson, A.Krinke, A.Cameron | Section, Township, Range: S:34 T:120N R:24W

Landform (hillslope, terrace, etc.): Depression | Local relief (concave, convex, none): Concave

Slope (%): 0 - 2 | Lat: | Long: | Datum:

Soil Map Unit Name: Glencoe Clay Loam (Hydric) | NWI Classification: PEM1A/PEM1Cd

Are climatic/hydrologic conditions of the site typical for this time of the year? Y (If no, explain in remarks)

Are vegetation ____, soil ____, or hydrology X significantly disturbed?

Are vegetation ____, soil ____, or hydrology ____ naturally problematic?

Are "normal circumstances" present? No

SUMMARY OF FINDINGS

(If needed, explain any answers in remarks.)

Hydrophytic vegetation present?	Y	**Is the sampled area within a wetland?**	Y
Hydric soil present?	Y		
Indicators of wetland hydrology present?	Y	If yes, optional wetland site ID:	Wetland 12

Remarks: (Explain alternative procedures here or in a separate report.)

Precipitation from Gridded Database Method within normal range. 30-day precipitation rolling total wetter than typical. Hydrology in this area had been disturbed due to adjacent grading of the site.

VEGETATION -- Use scientific names of plants.

Tree Stratum (Plot size: 30 ft Radius)	Absolute % Cover	Dominant Species	Indicator Staus
1			
2			
3			
4			
5			
	0	= Total Cover	

Sapling/Shrub stratum (Plot size: 15 ft Radius)			
1			
2			
3			
4			
5			
	0	= Total Cover	

Herb stratum (Plot size: 5 ft Radius)			
1 *Phalaris arundinacea*	80	Y	FACW
2 *Carex lacustris*	20	Y	OBL
3			
4			
5			
6			
7			
8			
9			
10			
	100	= Total Cover	

Woody vine stratum (Plot size: 30 ft Radius)			
1			
2			
	0	= Total Cover	

Dominance Test Worksheet

Number of Dominant Species that are OBL, FACW, or FAC: 2 (A)

Total Number of Dominant Species Across all Strata: 2 (B)

Percent of Dominant Species that are OBL, FACW, or FAC: 100.00% (A/B)

Prevalence Index Worksheet

Total % Cover of:

OBL species	20	x 1 =	20	
FACW species	80	x 2 =	160	
FAC species	0	x 3 =	0	
FACU species	0	x 4 =	0	
UPL species	0	x 5 =	0	
Column totals	100	(A)	180	(B)

Prevalence Index = B/A = 1.80

Hydrophytic Vegetation Indicators:

- ___ Rapid test for hydrophytic vegetation
- X Dominance test is >50%
- X Prevalence index is ≤3.0*
- ___ Morphogical adaptations* (provide supporting data in Remarks or on a separate sheet)
- ___ Problematic hydrophytic vegetation* (explain)

*Indicators of hydric soil and wetland hydrology must be present, unless disturbed or problematic

Hydrophytic vegetation present? Y

Remarks: (Include photo numbers here or on a separate sheet)

SOIL

Sampling Point: SP12-1W

Profile Description: (Describe to the depth needed to document the indicator or confirm the absence of indicators.)

Depth (Inches)	Matrix Color (moist)	Matrix %	Redox Features Color (moist)	Redox %	Type*	Loc**	Texture	Remarks
0-7	10YR 2/1	100					Muck	
7-12	10GY 4/1	95	10YR 4/6	5	C	M	Sandy Clay Loam	

*Type: C = Concentration, D = Depletion, RM = Reduced Matrix, MS = Masked Sand Grains. **Location: PL = Pore Lining, M = Matrix

Hydric Soil Indicators:

- ___ Histisol (A1)
- ___ Histic Epipedon (A2)
- ___ Black Histic (A3)
- ___ Hydrogen Sulfide (A4)
- ___ Stratified Layers (A5)
- ___ 2 cm Muck (A10)
- X Depleted Below Dark Surface (A11)
- ___ Thick Dark Surface (A12)
- ___ Sandy Mucky Mineral (S1)
- ___ 5 cm Mucky Peat or Peat (S3)
- ___ Sandy Gleyed Matrix (S4)
- ___ Sandy Redox (S5)
- ___ Stripped Matrix (S6)
- ___ Loamy Mucky Mineral (F1)
- X Loamy Gleyed Matrix (F2)
- ___ Depleted Matrix (F3)
- ___ Redox Dark Surface (F6)
- ___ Depleted Dark Surface (F7)
- ___ Redox Depressions (F8)

Indicators for Problematic Hydric Soils:

- ___ Coast Prairie Redox (A16) (**LRR K, L, R**)
- ___ Dark Surface (S7) (**LRR K, L)**
- ___ Iron-Manganese Masses (F12) (**LRR K, L, R**)
- ___ Very Shallow Dark Surface (TF12)
- ___ Other (explain in remarks)

*Indicators of hydrophytic vegetation and weltand hydrology must be present, unless disturbed or problematic

Restrictive Layer (if observed):

Type: _____

Depth (inches): _____

Hydric soil present? Y

Remarks:

HYDROLOGY

Wetland Hydrology Indicators:

Primary Indicators (minimum of one is required; check all that apply)

- ___ Surface Water (A1)
- X High Water Table (A2)
- X Saturation (A3)
- ___ Water Marks (B1)
- ___ Sediment Deposits (B2)
- ___ Drift Deposits (B3)
- ___ Algal Mat or Crust (B4)
- ___ Iron Deposits (B5)
- ___ Inundation Visible on Aerial Imagery (B7)
- ___ Sparsely Vegetated Concave Surface (B8)
- ___ Water-Stained Leaves (B9)
- ___ Aquatic Fauna (B13)
- ___ True Aquatic Plants (B14)
- ___ Hydrogen Sulfide Odor (C1)
- ___ Oxidized Rhizospheres on Living Roots (C3)
- ___ Presence of Reduced Iron (C4)
- ___ Recent Iron Reduction in Tilled Soils (C6)
- ___ Thin Muck Surface (C7)
- ___ Gauge or Well Data (D9)
- ___ Other (Explain in Remarks)

Secondary Indicators (minimum of two required)

- ___ Surface Soil Cracks (B6)
- ___ Drainage Patterns (B10)
- ___ Dry-Season Water Table (C2)
- ___ Crayfish Burrows (C8)
- ___ Saturation Visible on Aerial Imagery (C9)
- ___ Stunted or Stressed Plants (D1)
- X Geomorphic Position (D2)
- X FAC-Neutral Test (D5)

Field Observations:

Surface water present?	Yes	___	No	X	Depth (inches):	___
Water table present?	Yes	X	No	___	Depth (inches):	6
Saturation present? (includes capillary fringe)	Yes	X	No	___	Depth (inches):	0

Indicators of wetland hydrology present? Y

Describe recorded data (stream gauge, monitoring well, aerial photos, previous inspections), if available:

Remarks:

WETLAND DETERMINATION DATA FORM - Midwest Region

Project/Site: Crow River Heights West | City/County: Hanover/Wright | Sampling Date: 5/3/2017

Applicant/Owner: Dennis Backes | State: MN | Sampling Point: SP-A

Investigator(s): B.Carlson, A.Krinke, A.Cameron | Section, Township, Range: S:34 T:120N R:24W

Landform (hillslope, terrace, etc.): Excavated Trench | Local relief (concave, convex, none): Concave

Slope (%): 0 | Lat: | Long: | Datum:

Soil Map Unit Name: Angus-Cordova Complex (Partially Hydric) | NWI Classification: None

Are climatic/hydrologic conditions of the site typical for this time of the year? Y (If no, explain in remarks)

Are vegetation X, soil X, or hydrology X significantly disturbed? Are "normal circumstances" present? No

Are vegetation ____, soil ____, or hydrology ____ naturally problematic?

SUMMARY OF FINDINGS

(If needed, explain any answers in remarks.)

Hydrophytic vegetation present?	Y	**Is the sampled area within a wetland?**	N
Hydric soil present?	N	If yes, optional wetland site ID:	
Indicators of wetland hydrology present?	Y		

Remarks: (Explain alternative procedures here or in a separate report.)
Precipitation from Gridded Database Method within normal range. 30-day precipitation rolling total wetter than typical. The sample point was taken within a previously excavated road bed created in an area that was historic upland, therefore vegetation, soils, and hydrology were significantly disturbed.

VEGETATION -- Use scientific names of plants.

Tree Stratum (Plot size: 30 ft Radius)	Absolute % Cover	Dominant Species	Indicator Staus
1			
2			
3			
4			
5			
	0 = Total Cover		

Sapling/Shrub stratum (Plot size: 15 ft Radius)			
1			
2			
3			
4			
5			
	0 = Total Cover		

Herb stratum (Plot size: 5 ft Radius)			
1 *Phalaris arundinacea*	20	Y	FACW
2 *Eleocharis obtusa*	20	Y	OBL
3 *Scirpus atrovirens*	15	Y	OBL
4 *Persicaria pensylvanica*	10	N	FACW
5			
6			
7			
8			
9			
10			
	65 = Total Cover		

Woody vine stratum (Plot size: 30 ft Radius)			
1			
2			
	0 = Total Cover		

Dominance Test Worksheet

Number of Dominant Species that are OBL, FACW, or FAC: 3 (A)

Total Number of Dominant Species Across all Strata: 3 (B)

Percent of Dominant Species that are OBL, FACW, or FAC: 100.00% (A/B)

Prevalence Index Worksheet

Total % Cover of:

OBL species	35	x 1 =	35
FACW species	30	x 2 =	60
FAC species	0	x 3 =	0
FACU species	0	x 4 =	0
UPL species	0	x 5 =	0
Column totals	65 (A)		95 (B)

Prevalence Index = B/A = 1.46

Hydrophytic Vegetation Indicators:

- ___ Rapid test for hydrophytic vegetation
- X Dominance test is >50%
- X Prevalence index is ≤3.0*
- ___ Morphogical adaptations* (provide supporting data in Remarks or on a separate sheet)
- ___ Problematic hydrophytic vegetation* (explain)

*Indicators of hydric soil and wetland hydrology must be present, unless disturbed or problematic

Hydrophytic vegetation present? Y

Remarks: (Include photo numbers here or on a separate sheet)

SOIL

Sampling Point: SP-A

Profile Description: (Describe to the depth needed to document the indicator or confirm the absence of indicators.)

Depth (Inches)	Matrix Color (moist)	Matrix %	Redox Features Color (moist)	Redox %	Type*	Loc**	Texture	Remarks
0-4	2.5Y 5/4	98	10GY 5/0	2	C	M	Clay Loam	
4-24	2.5Y 5/4	98	10GY 5/0	2	C	M	Sandy Clay Loam	

*Type: C = Concentration, D = Depletion, RM = Reduced Matrix, MS = Masked Sand Grains. **Location: PL = Pore Lining, M = Matrix

Hydric Soil Indicators:

- ___ Histisol (A1)
- ___ Histic Epipedon (A2)
- ___ Black Histic (A3)
- ___ Hydrogen Sulfide (A4)
- ___ Stratified Layers (A5)
- ___ 2 cm Muck (A10)
- ___ Depleted Below Dark Surface (A11)
- ___ Thick Dark Surface (A12)
- ___ Sandy Mucky Mineral (S1)
- ___ 5 cm Mucky Peat or Peat (S3)
- ___ Sandy Gleyed Matrix (S4)
- ___ Sandy Redox (S5)
- ___ Stripped Matrix (S6)
- ___ Loamy Mucky Mineral (F1)
- ___ Loamy Gleyed Matrix (F2)
- ___ Depleted Matrix (F3)
- ___ Redox Dark Surface (F6)
- ___ Depleted Dark Surface (F7)
- ___ Redox Depressions (F8)

Indicators for Problematic Hydric Soils:

- ___ Coast Prairie Redox (A16) (**LRR K, L, R**)
- ___ Dark Surface (S7) (**LRR K, L**)
- ___ Iron-Manganese Masses (F12) (**LRR K, L, R**)
- ___ Very Shallow Dark Surface (TF12)
- ___ Other (explain in remarks)

*Indicators of hydrophytic vegetation and weltand hydrology must be present, unless disturbed or problematic

Restrictive Layer (if observed):

Type: _____

Depth (inches): _____

Hydric soil present? N

Remarks:

Soil boring taken within an area that had been previously excavated for road construction, and left undeveloped.

HYDROLOGY

Wetland Hydrology Indicators:

Primary Indicators (minimum of one is required; check all that apply)

- X Surface Water (A1)
- X High Water Table (A2)
- X Saturation (A3)
- ___ Water Marks (B1)
- ___ Sediment Deposits (B2)
- ___ Drift Deposits (B3)
- ___ Algal Mat or Crust (B4)
- ___ Iron Deposits (B5)
- ___ Inundation Visible on Aerial Imagery (B7)
- ___ Sparsely Vegetated Concave Surface (B8)
- ___ Water-Stained Leaves (B9)
- ___ Aquatic Fauna (B13)
- ___ True Aquatic Plants (B14)
- ___ Hydrogen Sulfide Odor (C1)
- ___ Oxidized Rhizospheres on Living Roots (C3)
- ___ Presence of Reduced Iron (C4)
- ___ Recent Iron Reduction in Tilled Soils (C6)
- ___ Thin Muck Surface (C7)
- ___ Gauge or Well Data (D9)
- ___ Other (Explain in Remarks)

Secondary Indicators (minimum of two required)

- ___ Surface Soil Cracks (B6)
- ___ Drainage Patterns (B10)
- ___ Dry-Season Water Table (C2)
- ___ Crayfish Burrows (C8)
- ___ Saturation Visible on Aerial Imagery (C9)
- ___ Stunted or Stressed Plants (D1)
- X Geomorphic Position (D2)
- X FAC-Neutral Test (D5)

Field Observations:

Surface water present?	Yes	X	No	___	Depth (inches):	6
Water table present?	Yes	X	No	___	Depth (inches):	6
Saturation present? (includes capillary fringe)	Yes	X	No	___	Depth (inches):	Surface

Indicators of wetland hydrology present? Y

Describe recorded data (stream gauge, monitoring well, aerial photos, previous inspections), if available:

Remarks:

Crow River Heights West Site

Wetland Delineation Report

APPENDIX E

No-Loss Information

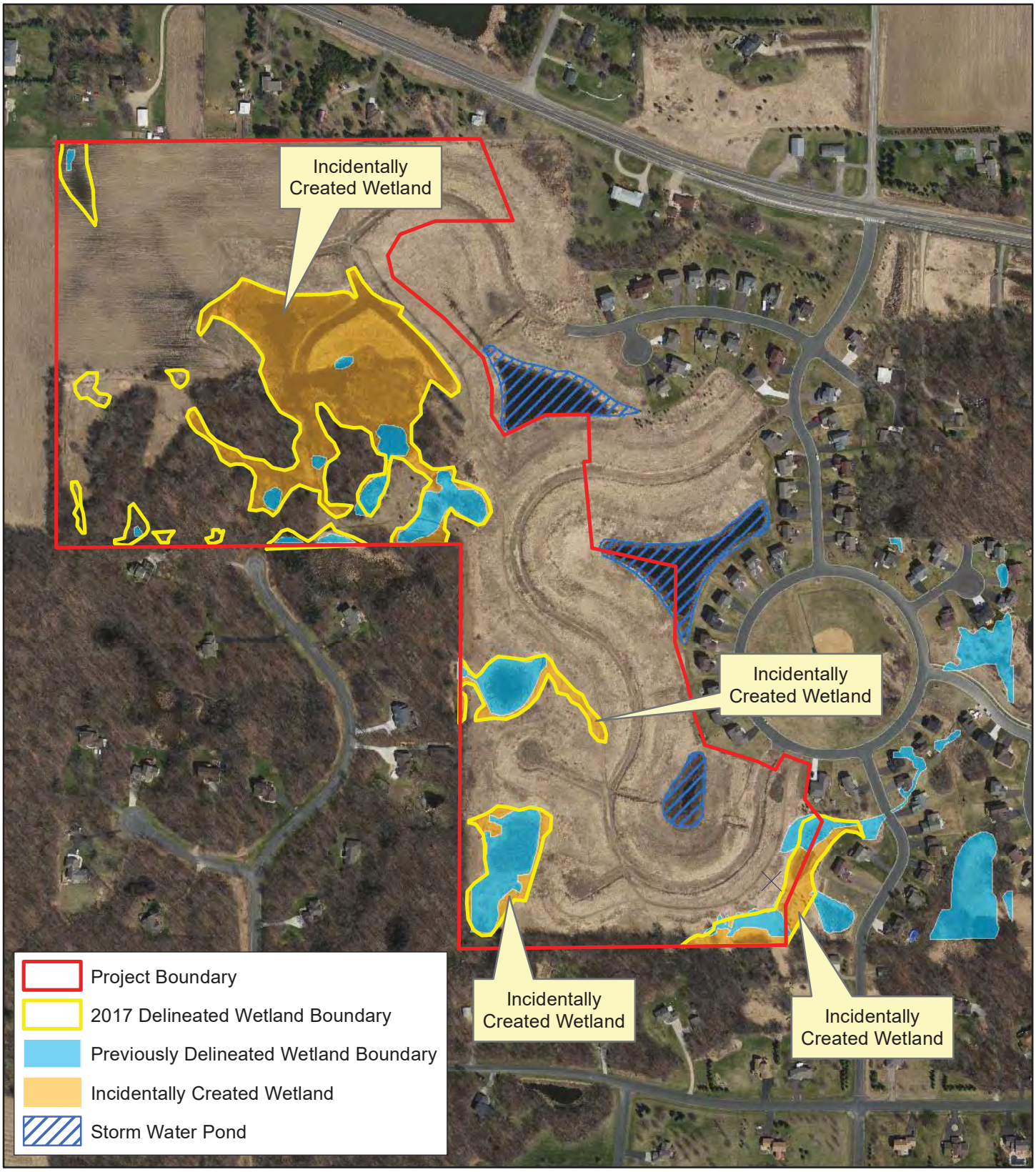

Appendix E - Delineation Boundary Comparison & Incidental Wetland Areas

N

0 400 Feet

KJOLHAUG ENVIRONMENTAL SERVICES COMPANY

Source: MnGeo, ESRI Imagery Basemap

Crow River Heights West (KES 2017-052)
Hanover, Minnesota

Note: Boundaries indicated on this figure are approximate and do not constitute an official survey product.

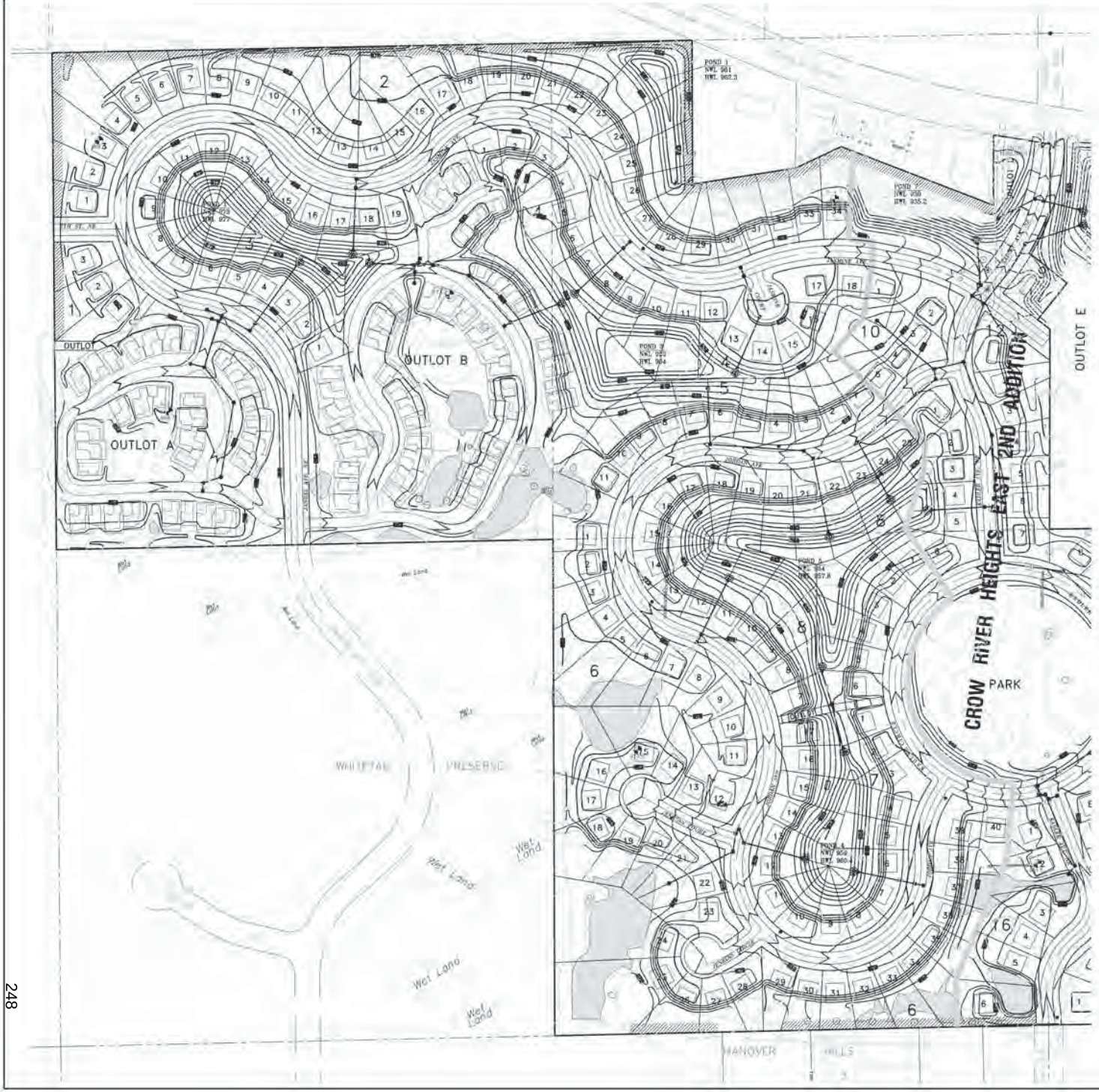

NOTES:
1. EXISTING TOPOGRAPHY FROM WSB ASSOC. INC. MAY 1999.
2. STREET WIDTH TO MEET CITY STANDARDS.
3. STREET & PAD CORRECTIONS TO MEET REQUIREMENTS OF SOILS ENGINEER
4. EROSION CONTROL MEASURES TO BE UTILIZED WILL INCLUDE SILT FENCE, HAY BALES, TEMPORARY HYDROPHIC, STREET SWEEPING, SODDING & MULCHING, AND OTHER METHODS AS NECESSARY

LEGEND

EXISTING CONTOURS
EXISTING STORM SEWER
EXISTING WETLANDS
PROPOSED SPOT ELEVATION
PROPOSED CONTOUR
PROPOSED STORM SEWER

DENOTES SOIL BORING LOCATION

DENOTES WETLANDS AS DELINEATED BY KUCHMAC ENVIRONMENTAL SERVICES 6-99

Engineering • Planning • Surveying

MFRA
McCombs Frank Roos Associates, Inc.

1000 23rd Street North • Pinnacle, Minnesota • 55447
phone 612/476-6927 • fax 612/476-6532
E-Mail: mail@mfra.com

Client

Gold Nugget Development, Inc.

Project

Crow River Heights West
Hanover, MN.

Sheet Title

Preliminary Grading & Drainage Plan

I hereby certify that this plan, specification, or report was prepared by me or under my direct supervision and that I am a duly Registered Professional Engineer under the laws of the State of Minnesota.

Name Russell H. Roche Lic. # 16801
Date 7-20-00
Registration Number 16801

Designed: Drawn: Checked:
Scale: 1"=50' Approved: Date:
Date: 7-20-00

Revisions

No.	Date	By	Description
1	8/14/00	RHR	Revised North Extension

Sheet 5/10 **Revision** A

MFRA FILE NO.: 12724

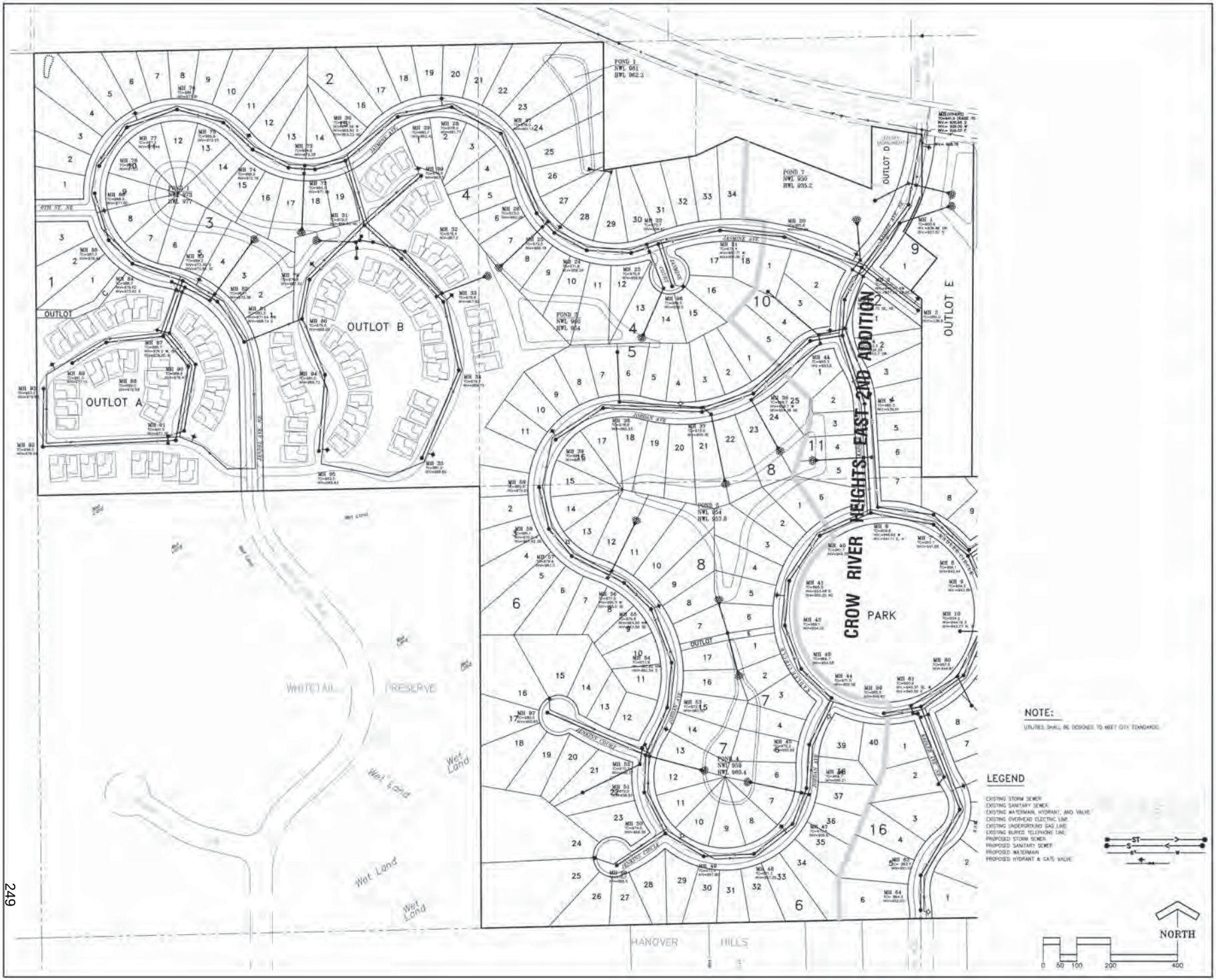

Engineering • Planning • Surveying

MFRA
McCombs Frank Roos Associates, Inc.

13800 23rd Avenue North • Plymouth, Minnesota • 55447
phone 612/476-6010 • fax 612/476-6132
E-Mail: mail@mfra.com

Client

Gold Nugget Development, Inc.

Project

Crow River Heights West
Hanover, MN.

Sheet Title

Preliminary Utility Plan West End

I hereby certify that this plan, specification, or report was prepared by me or under my direct supervision and that I am a duly Registered Professional Engineer under the laws of the State of Minnesota.

Name: Donald H. Roos
Date: 1-11-10
Registration Number: 14996

Designed: J.J./DHR Drawn: DHR
Checked: DHR Approved: DHR
Date: 1-11-10

Revisions

No.	Date	By	Description
A	1/4/10	AND	Revised North Collector

Sheet 7/10 **Revision** A

MFRA FILE NO.: 12724

Crow River Heights West Site

Wetland Delineation Report

APPENDIX F

Aerial Review for
Offsite Hydrology Assessment

Figure 7 - Offsite Hydrology Assessment Areas (2013 FSA Photo)

N

0 400 Feet

KJOLHAUG ENVIRONMENTAL SERVICES COMPANY

Source: MnGeo, ESRI Imagery Basemap

Crow River Heights West (KES 2017-052)
Hanover, Minnesota

Note: Boundaries indicated on this figure are approximate and do not constitute an official survey product.

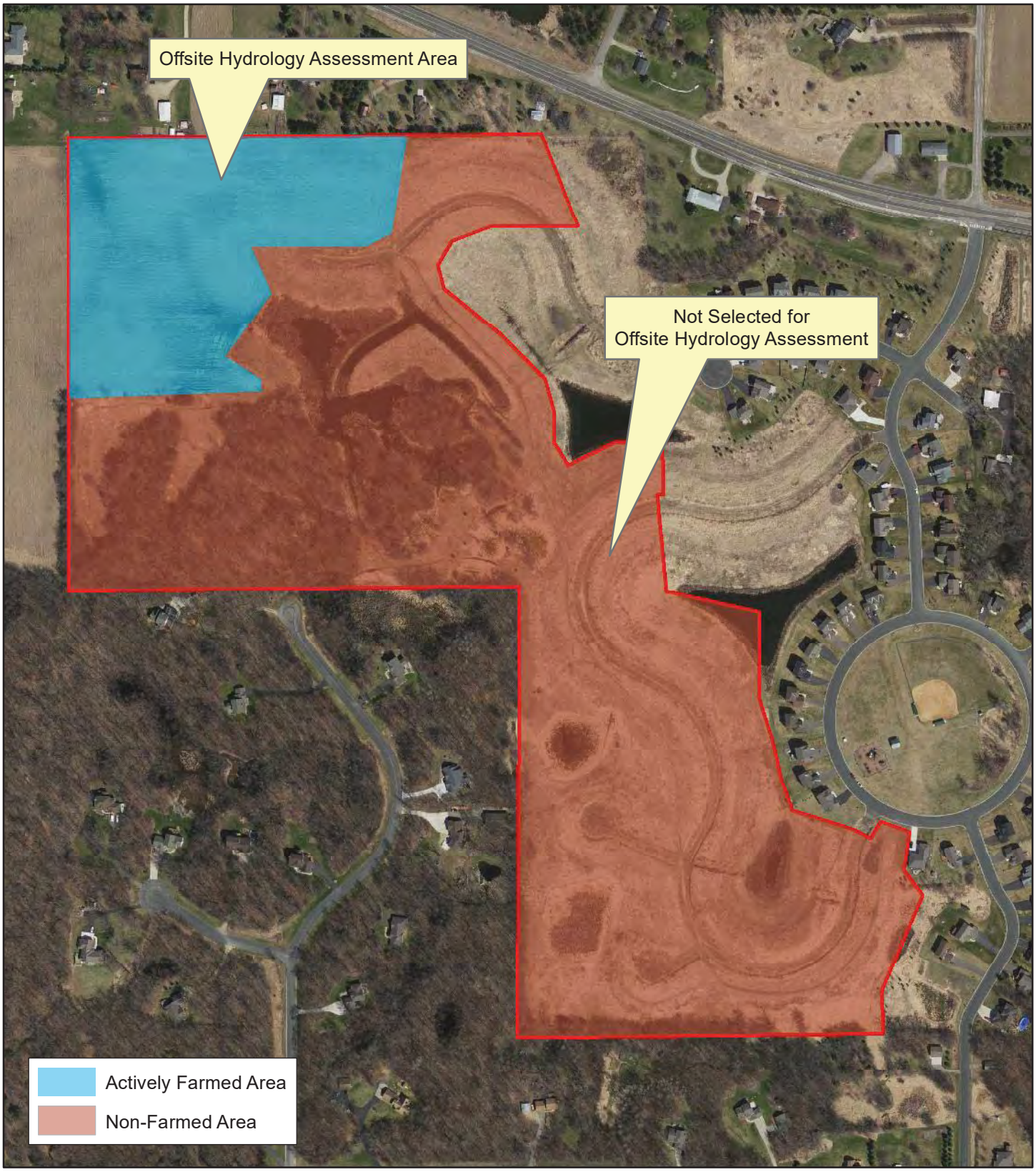

Figure 7A - Offsite Hydrology Assessment Areas

N

0 400 Feet

KJOLHAUG ENVIRONMENTAL SERVICES COMPANY

Source: MnGeo, ESRI Imagery Basemap

Crow River Heights West (KES 2017-052)
Hanover, Minnesota

Note: Boundaries indicated on this figure are approximate and do not constitute an official survey product.

Exhibit 1 Field data sheet reference (if applicable):_____

Wetland Hydrology from Aerial Imagery – Recording Form

Project Name: Crow River Heights West **Date:** 9/29/2017 **County:** Wright

Investigator: A.Cameron **Legal Description (S, T, R):** S:34 T:120N R:24W

Date Image Taken (M-D-Y)	Image Source	Climate Condition (wet, dry, normal)[1]	Image Interpretation(s)				
			Area: A	Area:	Area:	Area:	Area:
July 1, 1979	FSA	Wet	CS				
July 1, 1980	FSA	Normal (1)	DO/CS (1)				
July 1, 1981	FSA	Normal (2)	NV				
July 1, 1982	FSA	Normal (3)	DO/CS (2)				
July 1, 1983	FSA	Normal (4)	NV				
July 1, 1984	FSA	Wet	WS				
July 1, 1985	FSA	Wet	NV				
July 1, 1986	FSA	Normal (5)	DO/CS (3)				
July 1, 1987	FSA	Dry	NV				
July 1, 1988	FSA	Dry	NV				
July 1, 1989	FSA	Normal (6)	NV				
July 1, 1990	FSA	Wet	DO				
July 1, 1991	FSA	Wet	DO/CS				
July 1, 1992	FSA	Dry	DO/CS				
July 1, 1993	FSA	Wet	WS				
July 1, 1994	FSA	Normal (7)	DO/CS (4)				
July 1, 1995	FSA	Normal (8)	DO/CS (5)				
July 1, 1996	FSA	Normal (9)	DO/CS (6)				
July 1, 1997	FSA	Dry	DO/CS				
July 1, 1998	FSA	Normal (10)	DO (7)				
July 1, 1999	FSA	Normal (11)	DO/CS (8)				
July 1, 2000	FSA	Normal (12)	NV				
July 1, 2003	FSA	Wet	DO				
July 1, 2006	FSA	Dry	WS				
July 1, 2008	FSA	Normal (13)	NV				
July 1, 2009	FSA	Dry	NV				
July 1, 2010	FSA	Wet	DO				
July 1, 2013	FSA	Wet	DO				
July 1, 2015	FSA	Normal (14)	WS (9)				
April 15, 2016	MN GEO	Normal (15)	SS (10)				
Normal Climate Condition			**Area: A**	**Area:**	**Area:**	**Area:**	**Area:**
Number of normal years			15				
Number with wet signatures			10				
Percent with wet signatures			67%				

KEY		
WS - wetland signature	SS - soil wetness signature	CS - crop stress
NC - not cropped	AP - altered pattern	NV - normal vegetative cover
DO - drowned out	SW - standing water	NSS – no soil wetness signature
Other labels or comments:		

- Use above key to label image interpretations. It is imperative that the reviewer read and understand the guidance associated with the use of these labels. If alternate labels are used, indicate in box above.
- If less than five (5) images taken during normal climate conditions are available, use an equal number of images taken during wet and dry climate conditions and use as many images as you have available. Describe the results using this methodology in your report.

[i] Use MN State Climatology website to determine climate condition when image was take

Exhibit 1 Field data sheet reference (if applicable):_____

Wetland Determination from Aerial Imagery – Recording Form

Project Name: Crow River Heights West **Date:** 9/29/2017 **County:** Wright

Investigator: A.Cameron **Legal Description (S, T, R):** S:34 T:120N R:24W

Use the Decision Matrix below to complete Table 1.

Hydric Soils present[1]	Identified on NWI or other wetland map[2]	Percent with wet signatures from Exhibit 1	Field verification required[3]	Wetland?
Yes	Yes	>50%	No	Yes
Yes	Yes	30-50%	No	Yes
Yes	Yes	<30%	Yes	Yes, if other hydrology indicators present
Yes	No	>50%	No	Yes
Yes	No	30-50%	Yes	Yes, if other hydrology indicators present
Yes	No	<30%	No	No
No	Yes	>50%	No	Yes
No	Yes	30-50%	No	Yes
No	Yes	<30%	No	No
No	No	>50%	Yes	Yes, if other hydrology indicators present
No	No	30-50%	Yes	Yes, if other hydrology indicators present
No	No	<30%	No	No

[1] The presence of hydric soils can be determined from the "Hydric Rating by Map Unit Feature" under "Land Classifications" from the Web Soil Survey. "Not Hydric" is the only category considered to not have hydric soils. Field sampling for the presence/absence of hydric soil indicators can be used in lieu of the hydric rating if appropriately documented by providing completed field data sheets.

[2] At minimum, the most updated NWI data available for the area must be reviewed for this step. Any and all other local or regional wetland maps that are publically available should be reviewed.

[3] Area should be reviewed in the field for the presence/absence of wetland hydrology indicators per the applicable 87 Manual Regional Supplement, including the D2 indicator (geomorphic position).

Table 1.

Area	Hydric Soils Present	Identified on NWI or other wetland map	Percent with wet signatures from Exhibit 1	Other hydrology indicators present[1]	Wetland?
A	Yes	No	67	Yes	Yes

[1] Answer "N/A" if field verification is not required and was not conducted.

Project Boundary

Offsite Hydrology Assessment Areas (1979 FSA Photo)

N

0 400 Feet

KJOLHAUG ENVIRONMENTAL SERVICES COMPANY

Source: MnGeo, ESRI Imagery Basemap

Crow River Heights West (KES 2017-052)
Hanover, Minnesota

Note: Boundaries indicated on this figure are approximate and do not constitute an official survey product.

Offsite Hydrology Assessment Areas (1980 FSA Photo)

N

0 400 Feet

KJOLHAUG ENVIRONMENTAL SERVICES COMPANY

Source: MnGeo, ESRI Imagery Basemap

Crow River Heights West (KES 2017-052)
Hanover, Minnesota

Note: Boundaries indicated on this figure are approximate and do not constitute an official survey product.

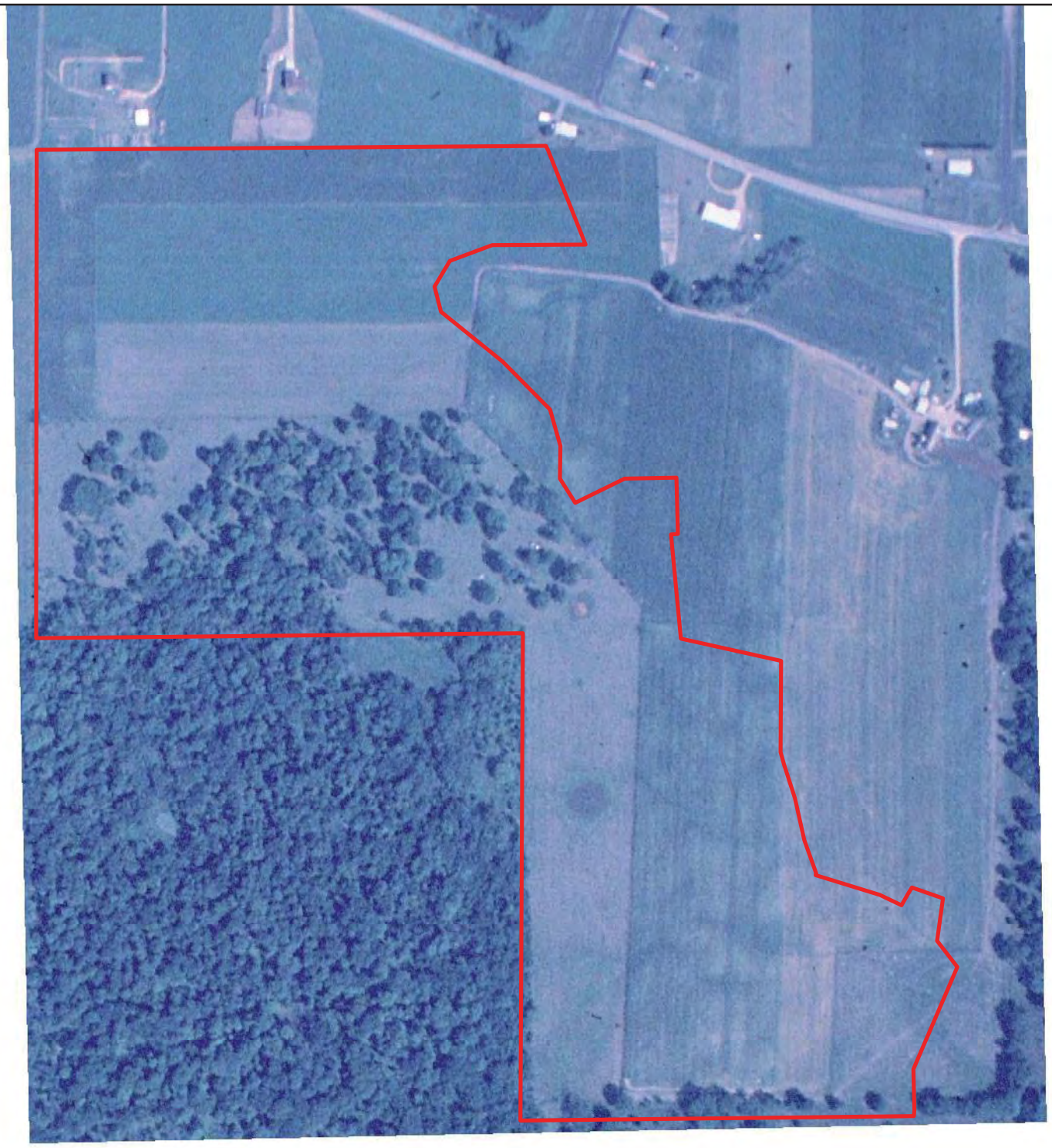

Project Boundary

Offsite Hydrology Assessment Areas (1981 FSA Photo)

N

0 400 Feet

KJOLHAUG ENVIRONMENTAL SERVICES COMPANY

Source: MnGeo, ESRI Imagery Basemap

Crow River Heights West (KES 2017-052)
Hanover, Minnesota

Note: Boundaries indicated on this figure are approximate and do not constitute an official survey product.

Project Boundary

Offsite Hydrology Assessment Areas (1982 FSA Photo)

N

0 400 Feet

KJOLHAUG ENVIRONMENTAL SERVICES COMPANY

Source: MnGeo, ESRI Imagery Basemap

Crow River Heights West (KES 2017-052)
Hanover, Minnesota

Note: Boundaries indicated on this figure are approximate and do not constitute an official survey product.

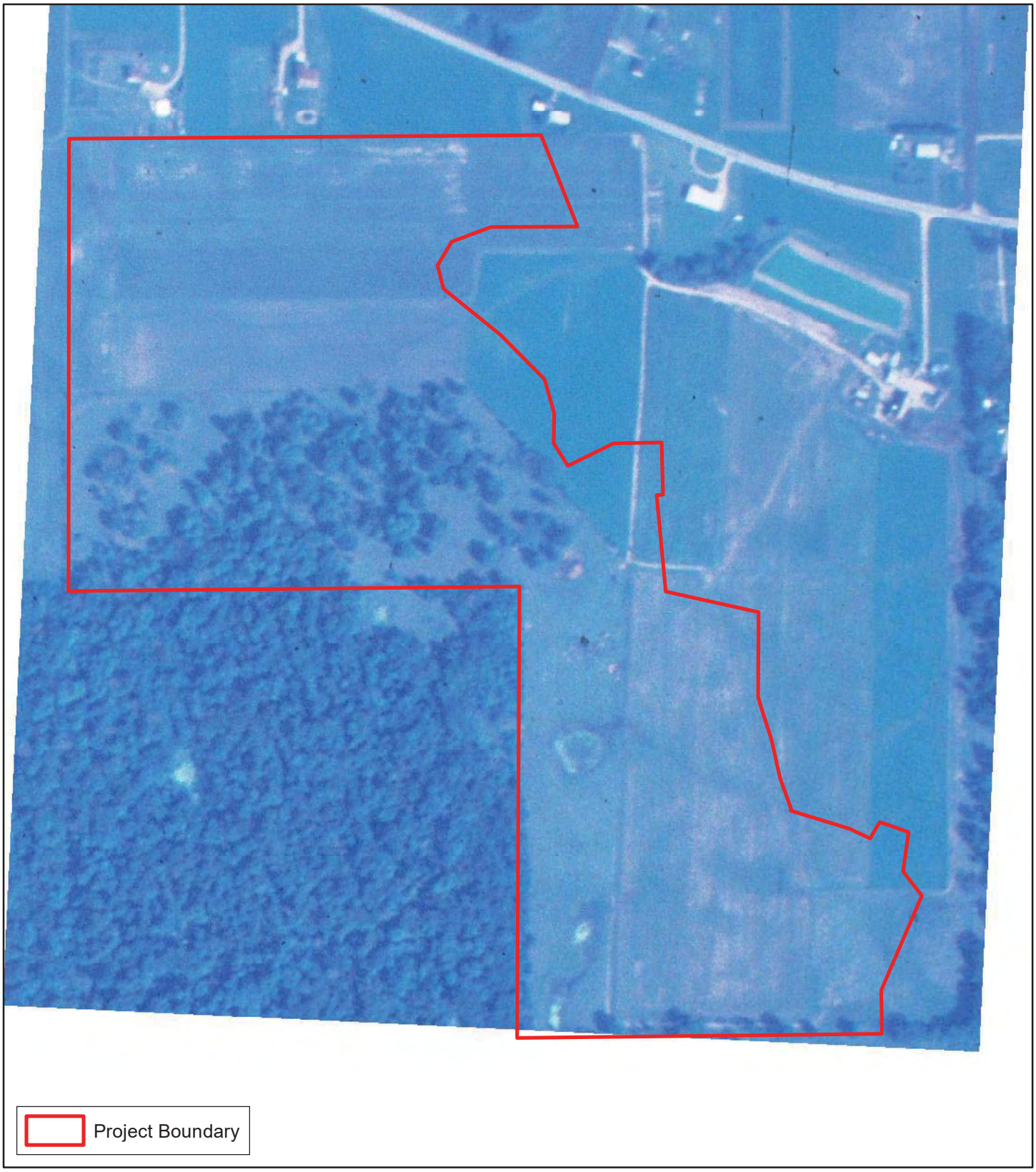

Offsite Hydrology Assessment Areas (1983 FSA Photo)

N

0 400 Feet

KJOLHAUG ENVIRONMENTAL SERVICES COMPANY

Source: MnGeo, ESRI Imagery Basemap

Crow River Heights West (KES 2017-052)
Hanover, Minnesota

Note: Boundaries indicated on this figure are approximate and do not constitute an official survey product.

Project Boundary

Offsite Hydrology Assessment Areas (1984 FSA Photo)

N

0 400 Feet

KJOLHAUG ENVIRONMENTAL SERVICES COMPANY

Source: MnGeo, ESRI Imagery Basemap

Crow River Heights West (KES 2017-052)
Hanover, Minnesota

Note: Boundaries indicated on this figure are approximate and do not constitute an official survey product.

Offsite Hydrology Assessment Areas (1985 FSA Photo)

N

0 400 Feet

KJOLHAUG ENVIRONMENTAL SERVICES COMPANY

Source: MnGeo, ESRI Imagery Basemap

Crow River Heights West (KES 2017-052)
Hanover, Minnesota

Note: Boundaries indicated on this figure are approximate and do not constitute an official survey product.

Offsite Hydrology Assessment Areas (1986 FSA Photo)

N

0 400 Feet

KJOLHAUG ENVIRONMENTAL SERVICES COMPANY

Source: MnGeo, ESRI Imagery Basemap

Crow River Heights West (KES 2017-052)
Hanover, Minnesota

Note: Boundaries indicated on this figure are approximate and do not constitute an official survey product.

Project Boundary

Offsite Hydrology Assessment Areas (1987 FSA Photo)

N

0 400 Feet

KJOLHAUG ENVIRONMENTAL SERVICES COMPANY

Source: MnGeo, ESRI Imagery Basemap

Crow River Heights West (KES 2017-052)
Hanover, Minnesota

Note: Boundaries indicated on this figure are approximate and do not constitute an official survey product.

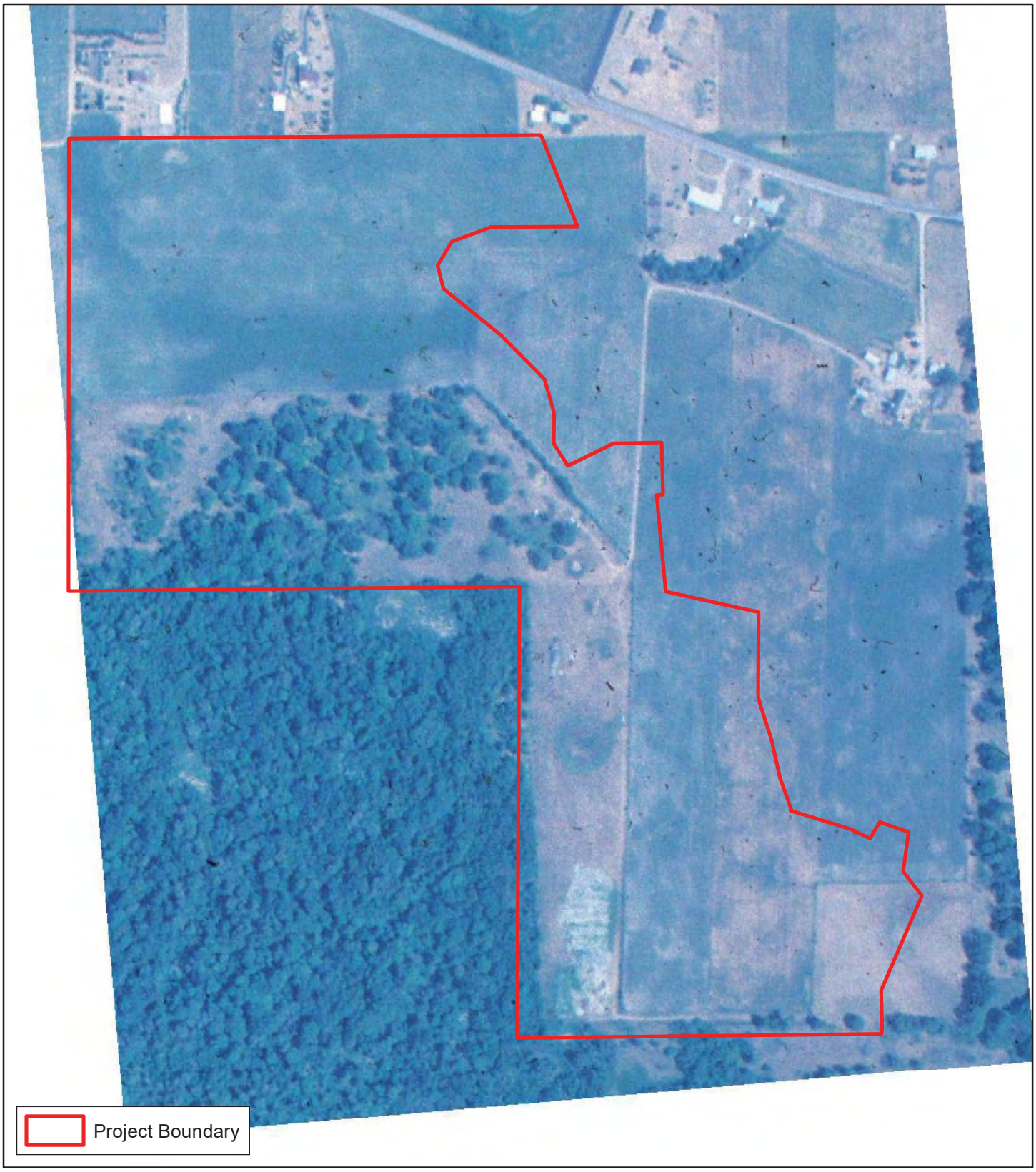

Offsite Hydrology Assessment Areas (1988 FSA Photo)

N

0 400 Feet

KJOLHAUG ENVIRONMENTAL SERVICES COMPANY

Source: MnGeo, ESRI Imagery Basemap

Crow River Heights West (KES 2017-052)
Hanover, Minnesota

Note: Boundaries indicated on this figure are approximate and do not constitute an official survey product.

Offsite Hydrology Assessment Areas (1989 FSA Photo)

N

0 400 Feet

KJOLHAUG ENVIRONMENTAL SERVICES COMPANY

Source: MnGeo, ESRI Imagery Basemap

Crow River Heights West (KES 2017-052)
Hanover, Minnesota

Note: Boundaries indicated on this figure are approximate and do not constitute an official survey product.

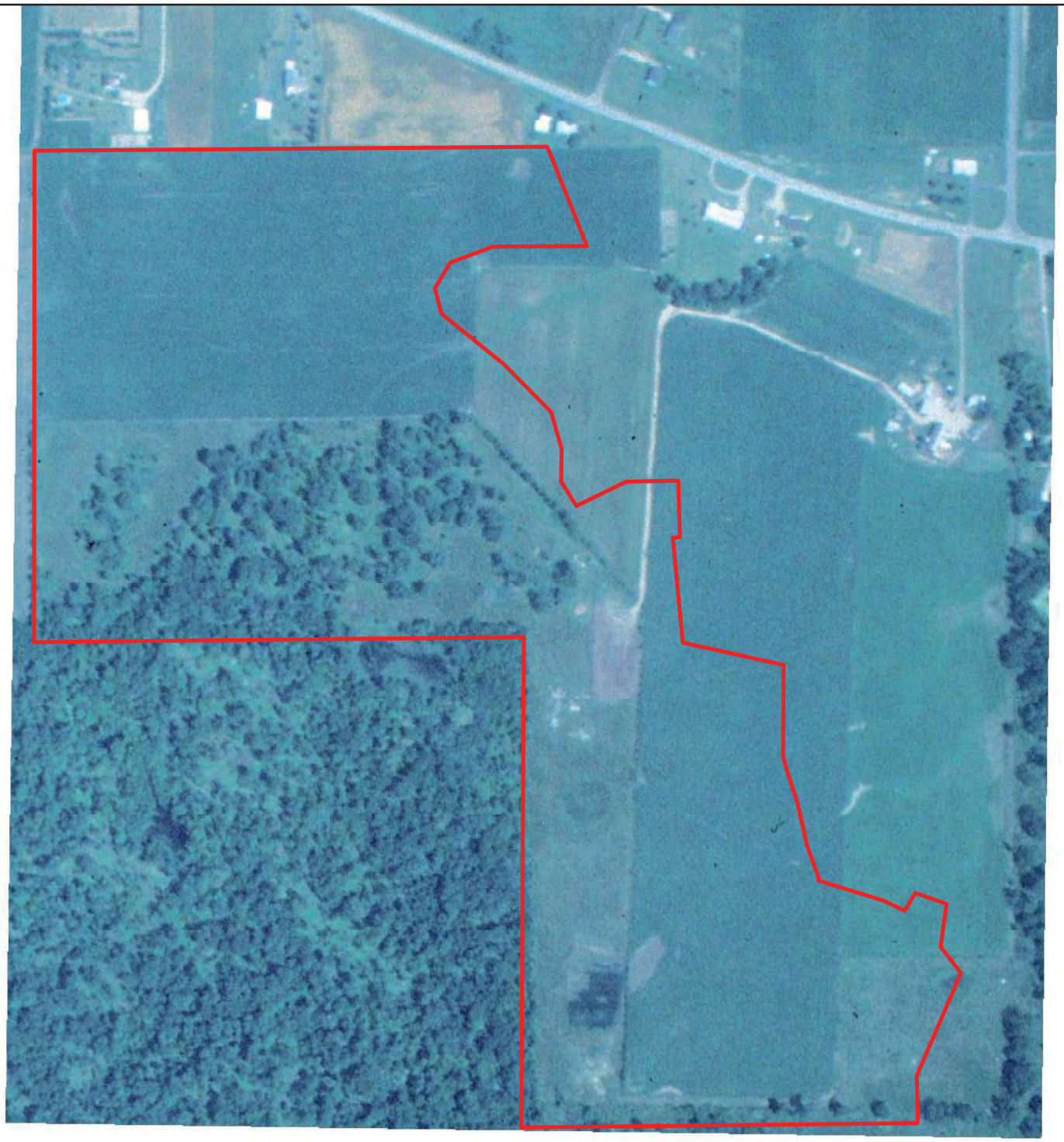

Project Boundary

Offsite Hydrology Assessment Areas (1990 FSA Photo)

N

0 400 Feet

KJOLHAUG ENVIRONMENTAL SERVICES COMPANY

Source: MnGeo, ESRI Imagery Basemap

Crow River Heights West (KES 2017-052)
Hanover, Minnesota

Note: Boundaries indicated on this figure are approximate and do not constitute an official survey product.

Offsite Hydrology Assessment Areas (1991 FSA Photo)

N

0 400 Feet

KJOLHAUG ENVIRONMENTAL SERVICES COMPANY

Source: MnGeo, ESRI Imagery Basemap

Crow River Heights West (KES 2017-052)
Hanover, Minnesota

Note: Boundaries indicated on this figure are approximate and do not constitute an official survey product.

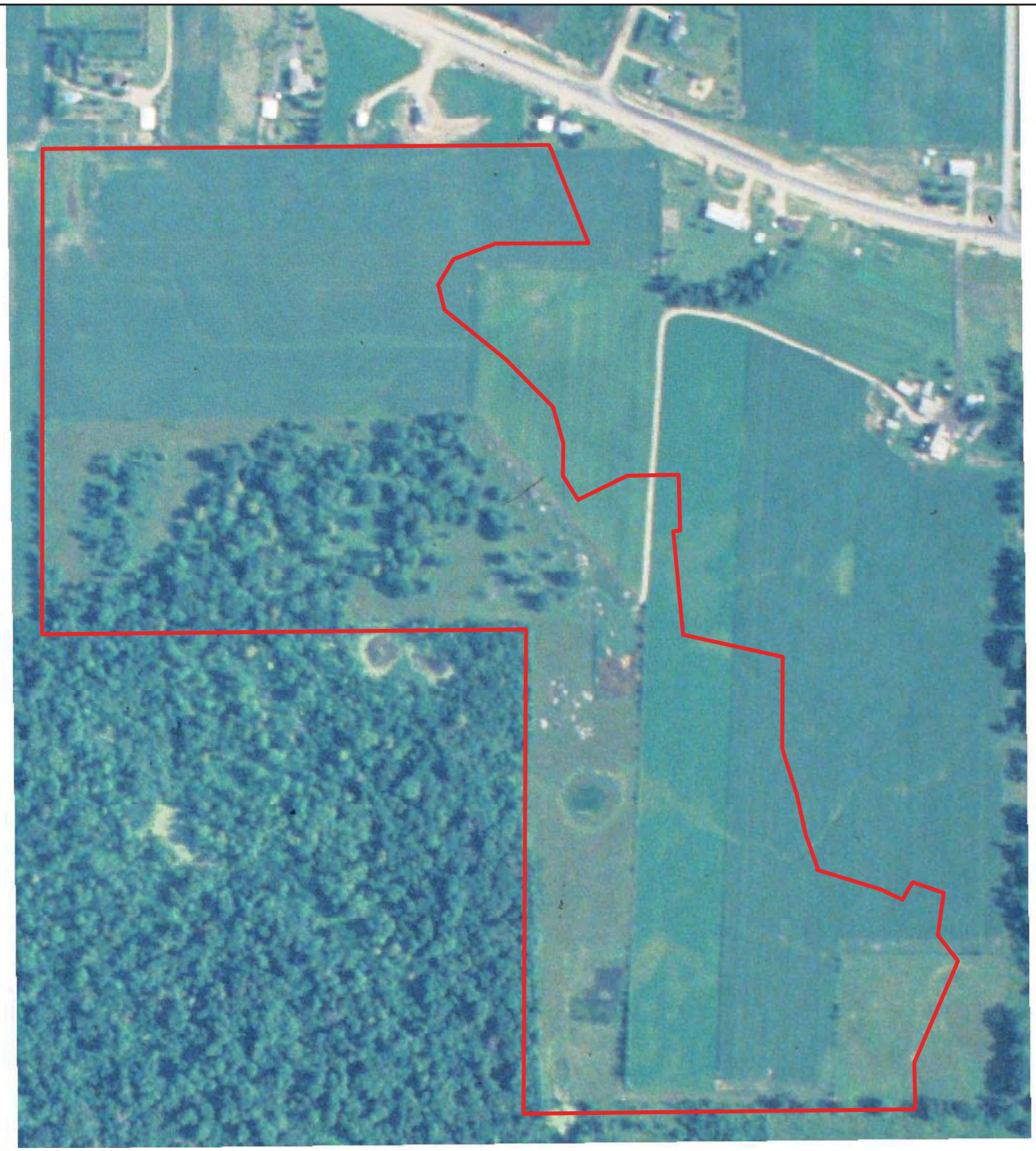

Project Boundary

Offsite Hydrology Assessment Areas (1992 FSA Photo)

N

0 400 Feet

KJOLHAUG ENVIRONMENTAL SERVICES COMPANY

Source: MnGeo, ESRI Imagery Basemap

Crow River Heights West (KES 2017-052)
Hanover, Minnesota

Note: Boundaries indicated on this figure are approximate and do not constitute an official survey product.

Offsite Hydrology Assessment Areas (1993 FSA Photo)

N

0 400 Feet

KJOLHAUG ENVIRONMENTAL SERVICES COMPANY

Source: MnGeo, ESRI Imagery Basemap

Crow River Heights West (KES 2017-052)
Hanover, Minnesota

Note: Boundaries indicated on this figure are approximate and do not constitute an official survey product.

Offsite Hydrology Assessment Areas (1994 FSA Photo)

N

0 400 Feet

KJOLHAUG ENVIRONMENTAL SERVICES COMPANY

Source: MnGeo, ESRI Imagery Basemap

Crow River Heights West (KES 2017-052)
Hanover, Minnesota

Note: Boundaries indicated on this figure are approximate and do not constitute an official survey product.

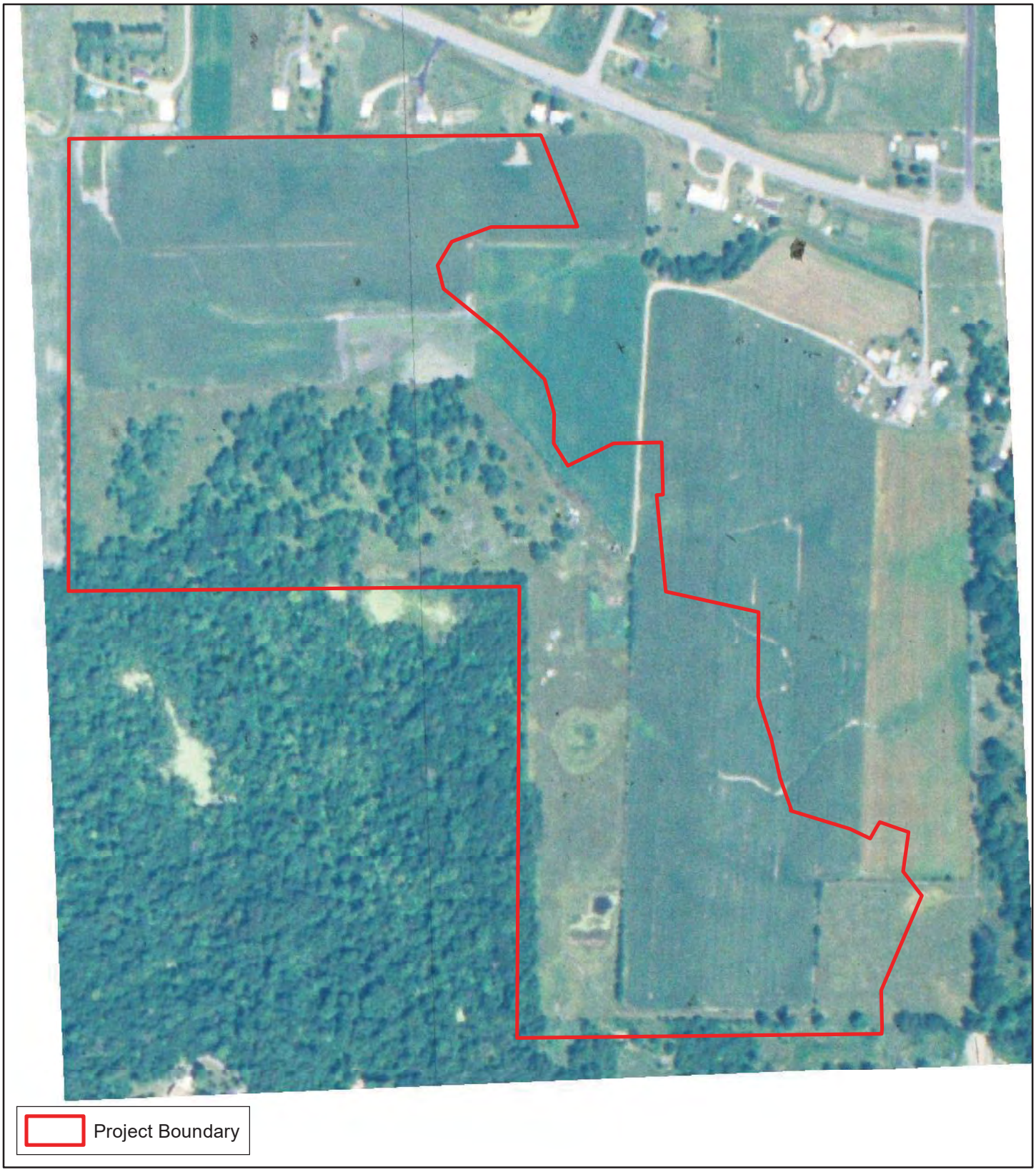

Offsite Hydrology Assessment Areas (1995 FSA Photo)

N

0 400 Feet

KJOLHAUG ENVIRONMENTAL SERVICES COMPANY

Source: MnGeo, ESRI Imagery Basemap

Crow River Heights West (KES 2017-052)
Hanover, Minnesota

Note: Boundaries indicated on this figure are approximate and do not constitute an official survey product.

Offsite Hydrology Assessment Areas (1996 FSA Photo)

N

0 400 Feet

KJOLHAUG ENVIRONMENTAL SERVICES COMPANY

Source: MnGeo, ESRI Imagery Basemap

Crow River Heights West (KES 2017-052)
Hanover, Minnesota

Note: Boundaries indicated on this figure are approximate and do not constitute an official survey product.

Offsite Hydrology Assessment Areas (1997 FSA Photo)

N

0 400 Feet

KJOLHAUG ENVIRONMENTAL SERVICES COMPANY

Source: MnGeo, ESRI Imagery Basemap

Crow River Heights West (KES 2017-052)
Hanover, Minnesota

Note: Boundaries indicated on this figure are approximate and do not constitute an official survey product.

Offsite Hydrology Assessment Areas (1998 FSA Photo)

N

0 400 Feet

KJOLHAUG ENVIRONMENTAL SERVICES COMPANY

Source: MnGeo, ESRI Imagery Basemap

Crow River Heights West (KES 2017-052)
Hanover, Minnesota

Note: Boundaries indicated on this figure are approximate and do not constitute an official survey product.

Offsite Hydrology Assessment Areas (1999 FSA Photo)

N

0 400 Feet

KJOLHAUG ENVIRONMENTAL SERVICES COMPANY

Source: MnGeo, ESRI Imagery Basemap

Crow River Heights West (KES 2017-052)
Hanover, Minnesota

Note: Boundaries indicated on this figure are approximate and do not constitute an official survey product.

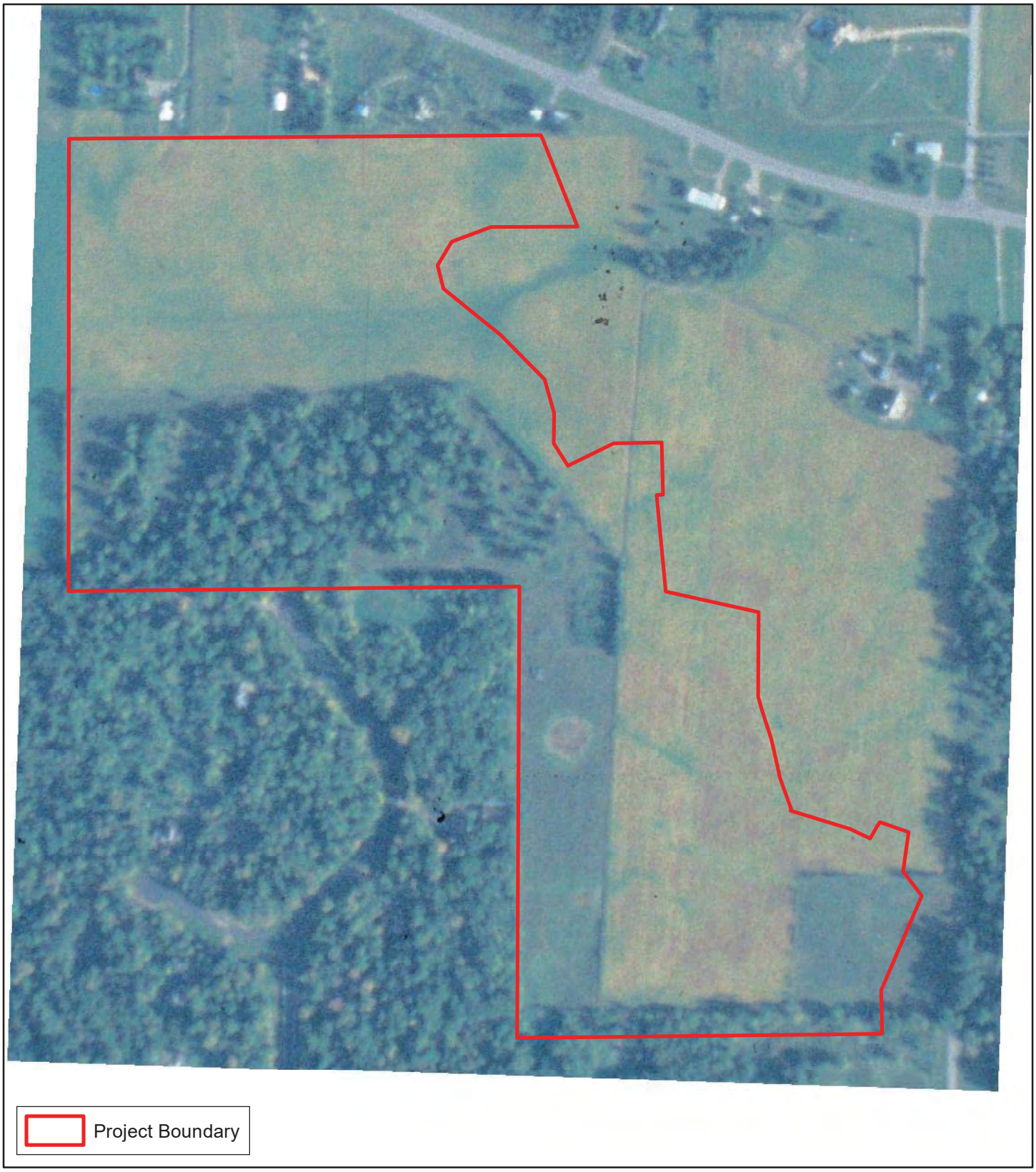

Offsite Hydrology Assessment Areas (2000 FSA Photo)

N

0 400 Feet

KJOLHAUG ENVIRONMENTAL SERVICES COMPANY

Source: MnGeo, ESRI Imagery Basemap

Crow River Heights West (KES 2017-052)
Hanover, Minnesota

Note: Boundaries indicated on this figure are approximate and do not constitute an official survey product.

Offsite Hydrology Assessment Areas (2003 FSA Photo)

N

0 400 Feet

KJOLHAUG ENVIRONMENTAL SERVICES COMPANY

Source: MnGeo, ESRI Imagery Basemap

Crow River Heights West (KES 2017-052)
Hanover, Minnesota

Note: Boundaries indicated on this figure are approximate and do not constitute an official survey product.

Offsite Hydrology Assessment Areas (2006 FSA Photo)

N

0 400 Feet

KJOLHAUG ENVIRONMENTAL SERVICES COMPANY

Source: MnGeo, ESRI Imagery Basemap

Crow River Heights West (KES 2017-052)
Hanover, Minnesota

Note: Boundaries indicated on this figure are approximate and do not constitute an official survey product.

Offsite Hydrology Assessment Areas (2008 FSA Photo)

N

0 400 Feet

KJOLHAUG ENVIRONMENTAL SERVICES COMPANY

Source: MnGeo, ESRI Imagery Basemap

Crow River Heights West (KES 2017-052)
Hanover, Minnesota

Note: Boundaries indicated on this figure are approximate and do not constitute an official survey product.

Offsite Hydrology Assessment Areas (2009 FSA Photo)

N

0 400 Feet

KJOLHAUG ENVIRONMENTAL SERVICES COMPANY

Source: MnGeo, ESRI Imagery Basemap

Crow River Heights West (KES 2017-052)
Hanover, Minnesota

Note: Boundaries indicated on this figure are approximate and do not constitute an official survey product.

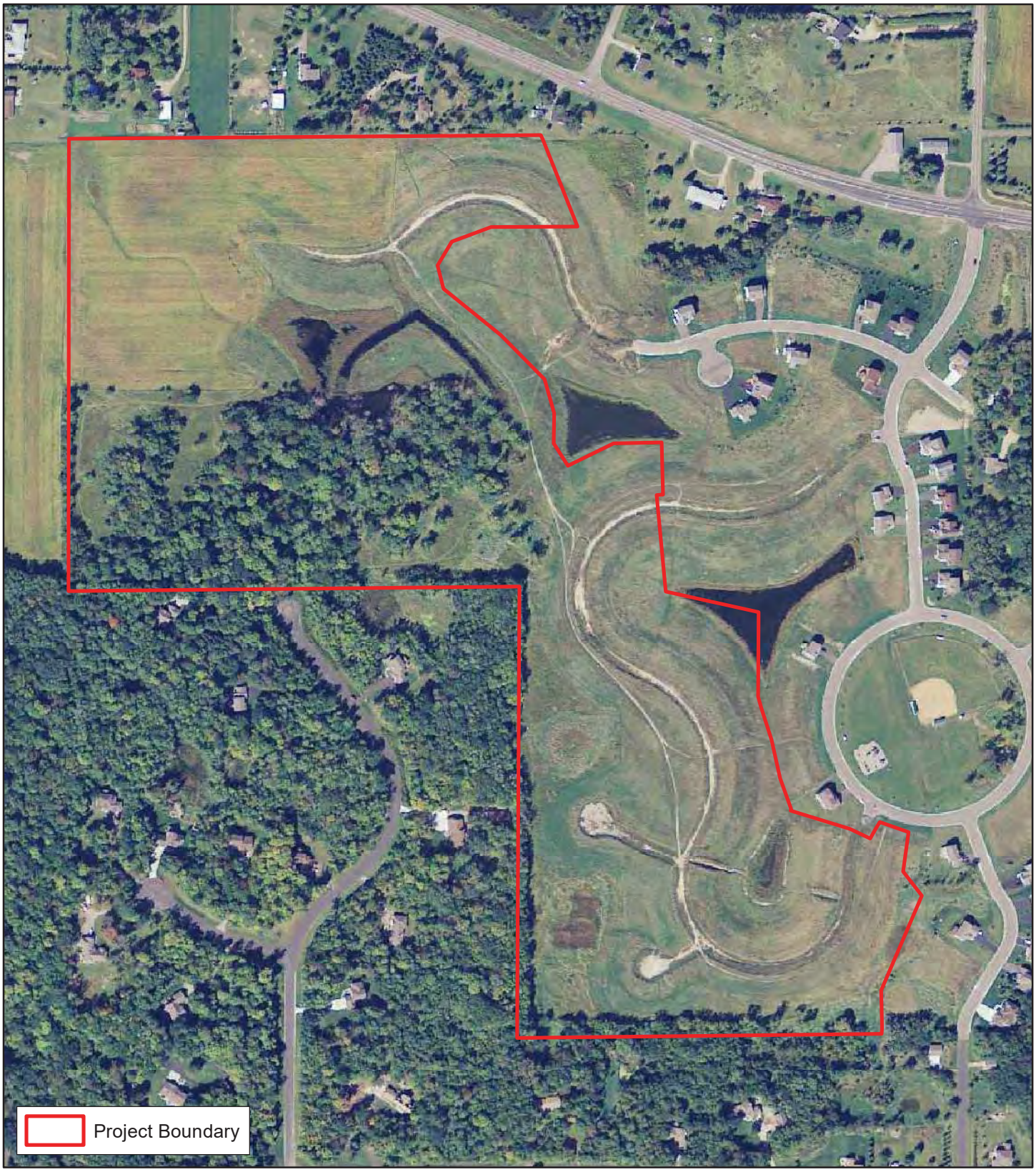

Offsite Hydrology Assessment Areas (2010 FSA Photo)

N

0 400 Feet

KJOLHAUG ENVIRONMENTAL SERVICES COMPANY

Source: MnGeo, ESRI Imagery Basemap

Crow River Heights West (KES 2017-052)
Hanover, Minnesota

Note: Boundaries indicated on this figure are approximate and do not constitute an official survey product.

Offsite Hydrology Assessment Areas (2013 FSA Photo)

N

0 400 Feet

KJOLHAUG ENVIRONMENTAL SERVICES COMPANY

Source: MnGeo, ESRI Imagery Basemap

Crow River Heights West (KES 2017-052)
Hanover, Minnesota

Note: Boundaries indicated on this figure are approximate and do not constitute an official survey product.

Offsite Hydrology Assessment Areas (2015 FSA Photo)

N

0 400 Feet

KJOLHAUG ENVIRONMENTAL SERVICES COMPANY

Source: MnGeo, ESRI Imagery Basemap

Crow River Heights West (KES 2017-052)
Hanover, Minnesota

Note: Boundaries indicated on this figure are approximate and do not constitute an official survey product.

Offsite Hydrology Assessment Areas (2016 MN GEO Photo)

N

0 400 Feet

KJOLHAUG ENVIRONMENTAL SERVICES COMPANY

Source: MnGeo, ESRI Imagery Basemap

Crow River Heights West (KES 2017-052)
Hanover, Minnesota

Note: Boundaries indicated on this figure are approximate and do not constitute an official survey product.

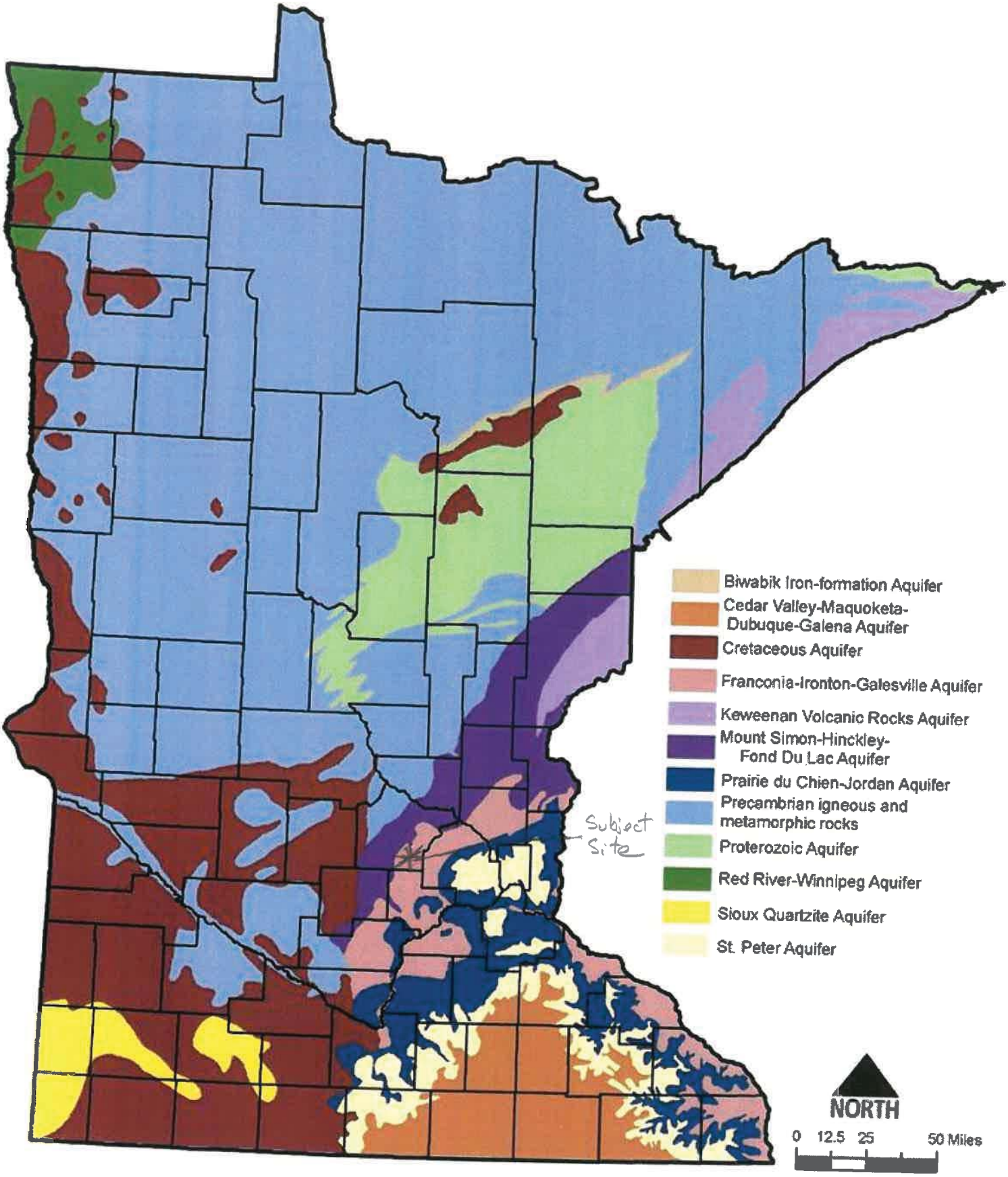

October, 2005

Sources: MGS (major aquifers from Minnesota's Bedrock Hydrogeology by Roman Kanivetsky, 1979; GIS data available at http://www.lmic.state.mn.us/chouse/metadata/hydqgeo.html), DNR (GIS data available at http://deli.dnr.state.mn.us/)

Minnesota Department of Natural Resources
Division of Ecological & Water Resources
500 Lafayette Road, Box 25
St. Paul, MN 55155-4025

March 30, 2018
Correspondence # ERDB 20180366

Mr. Tom Goodrum
Loucks Associates
7200 Hemlock Lane, Ste 300
Maple Grove, MN 55369

RE: Natural Heritage Review of the proposed West Crow River Heights,
T120N R24W Section 34; Wright County

Dear Mr. Goodrum,

As requested, the Minnesota Natural Heritage Information System has been queried to determine if any rare species or other significant natural features are known to occur within an approximate one-mile radius of the proposed project. Based on this query, rare features have been documented within the search area (for details, please visit the Rare Species Guide Website for more information on the biology, habitat use, and conservation measures of these rare species). Please note that the following rare features may be adversely affected by the proposed project:

- Blanding's turtles (*Emydoidea blandingii*), a state-listed threatened species, have been reported in the vicinity of the proposed project and may be encountered on site. Blanding's turtles use wetlands as well as upland areas up to and over a mile distant from wetlands. Uplands are used for nesting, basking, periods of dormancy, and traveling between wetlands. Factors believed to contribute to the decline of this species include collisions with vehicles, wetland drainage and degradation, and the development of upland habitat. Any added fatality can be detrimental to populations of Blanding's turtles, as these turtles have a low reproduction rate that depends upon a high survival rate to maintain population levels.

  This project has the potential to impact this rare turtle through direct fatalities or habitat disturbance/destruction due to dewatering, excavation, fill, or other construction activities associated with the project. Actions to avoid or minimize disturbance to this state-protected turtle may include, but are not limited to, the following recommendations:

  - Avoid Type 2 & 3 wetlands,
  - To avoid any incidental takings, avoid filling or dewatering wetlands during the winter,
  - Implement stringent sediment and erosion control methods,
  - Use wildlife-friendly erosion control methods (see enclosed fact sheet),

- Monitor for turtles during construction and report any sightings to the DNR,
- Refer to the first list of recommendations in the enclosed Blanding's Turtle Fact Sheet. If greater protection for turtles is desired, the second list of recommendations can be implemented as well. The fact sheet contains specific recommendations regarding roads, utilities, and landscaping that will pertain to this project.
- For specific recommendations pertaining to transportation projects, please refer to Curb Design and Small Animals, Preventing Entanglement, & Reducing Wildlife Vehicle Collisions in Chapter One of the Minnesota Department of Transportation's Best Practices Manual.
- If further assistance is needed, please contact the DNR Regional Nongame Specialist, Erica Hoaglund at 651-259-5772 or Erica.Hoaglund@state.mn.us.

The attached flyer should be given to all contractors working in the area. If Blanding's turtles are encountered on site, please remember that state law and rules prohibit the destruction of threatened or endangered species, except under certain prescribed conditions. If turtles are in imminent danger they must be moved by hand out of harm's way, otherwise they are to be left undisturbed.

- The Environmental Assessment Worksheet should address whether the proposed project has the potential to adversely affect the above rare features and, if so, it should identify specific measures that will be taken to avoid or minimize disturbance. Sufficient information should be provided so the DNR can determine whether a takings permit will be needed for any of the above protected species.

- Please include a copy of this letter in any state or local license or permit application. Please note that measures to avoid or minimize disturbance to the above rare features may be included as restrictions or conditions in any required permits or licenses.

The Natural Heritage Information System (NHIS), a collection of databases that contains information about Minnesota's rare natural features, is maintained by the Division of Ecological and Water Resources, Department of Natural Resources. The NHIS is continually updated as new information becomes available, and is the most complete source of data on Minnesota's rare or otherwise significant species, native plant communities, and other natural features. However, the NHIS is not an exhaustive inventory and thus does not represent all of the occurrences of rare features within the state. Therefore, ecologically significant features for which we have no records may exist within the project area. If additional information becomes available regarding rare features in the vicinity of the project, further review may be necessary.

For environmental review purposes, the results of this Natural Heritage Review are valid for one year; the results are only valid for the project location (noted above) and the project description provided on the NHIS Data Request Form. Please contact me if project details change or for an updated review if construction has not occurred within one year.

The Natural Heritage Review does not constitute review or approval by the Department of Natural Resources as a whole. Instead, it identifies issues regarding known occurrences of rare features and potential effects to these rare features. If needed, please contact your DNR Regional Environmental Assessment Ecologist to determine whether there are other natural resource concerns associated with the proposed project. Please be aware that additional site assessments or review may be required.

Thank you for consulting us on this matter, and for your interest in preserving Minnesota's rare natural resources. An invoice will be mailed to you under separate cover.

Sincerely,

Samantha Bump
Natural Heritage Review Specialist
Samantha.Bump@state.mn.us

Enc. Wildlife Friendly Erosion Control
Blanding's Turtle Fact Sheet & Flyer

Links: Rare Species Guide
http://www.dnr.state.mn.us/rsg/index.html
Chapter One of the Minnesota Department of Transportation's Best Practices Manual
http://www.dnr.state.mn.us/waters/watermgmt_section/pwpermits/gp_2004_0001_manual.html
DNR Regional Environmental Assessment Ecologist Contact Info
http://www.dnr.state.mn.us/eco/ereview/erp_regioncontacts.html

Cc: Becky Horton
Leslie Parris
Erica Hoaglund

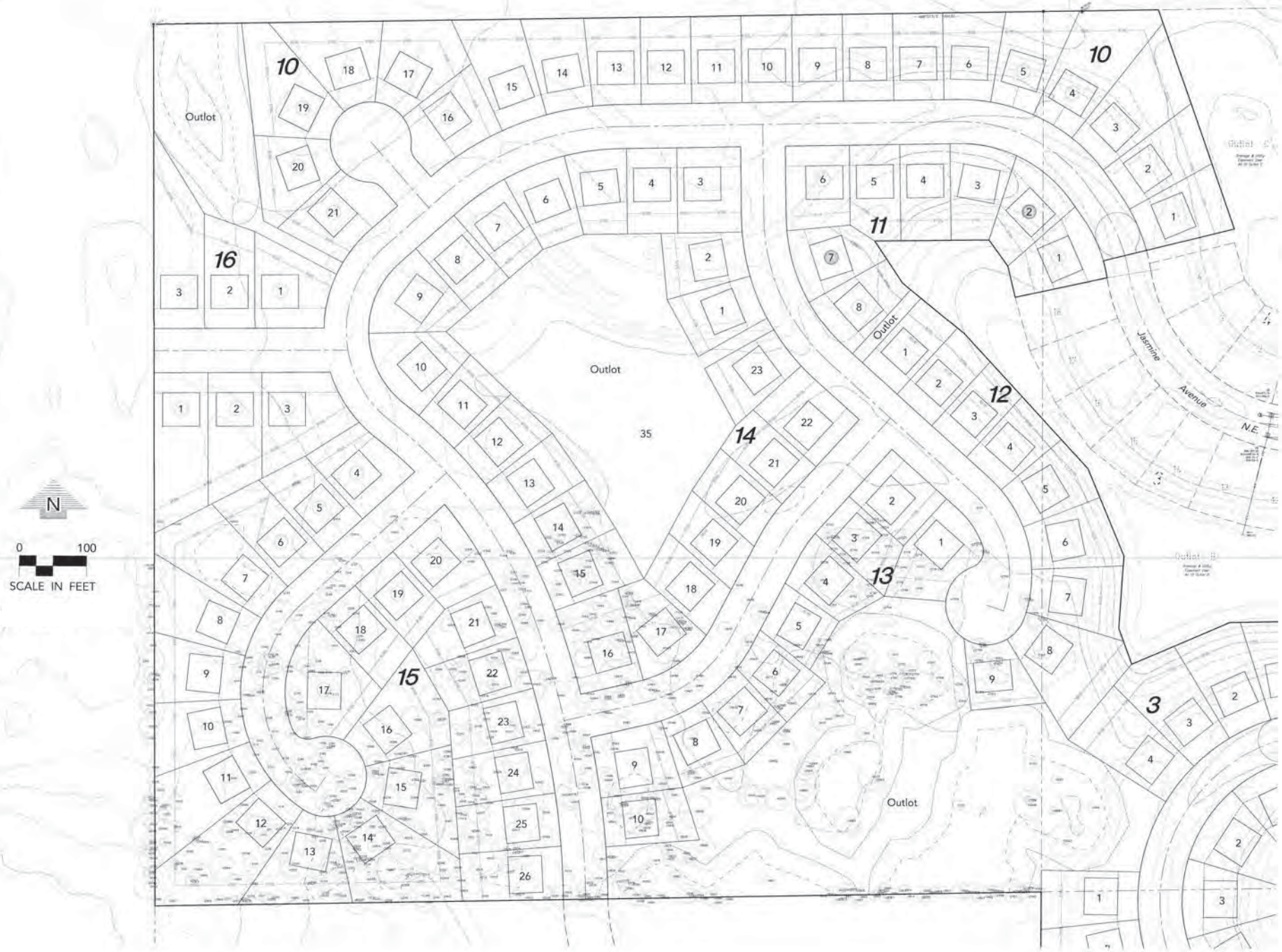

ATTACHMENT 13

Tom Goodrum

From:	Jesse Kling <jesse.kling@mnhs.org>
Sent:	Wednesday, January 10, 2018 2:40 PM
To:	Data Requests to SHPO
Cc:	Todd McLouth; Tom Goodrum
Subject:	Re: database search for historic properties
Attachments:	WrightArchaeology.xls

THIS EMAIL IS NOT A PROJECT CLEARANCE

This information has recently been updated, please read the note below carefully.

This message simply reports the results of the cultural resources database search you requested. The database search produced results for only previously known archaeological sites and historic properties.

No historic structures were identified in a search of the Minnesota Archaeological Inventory and Historic and Architectural Inventory for the search area requested. **A report containing the archaeological sites identified is attached.**

The result of this database search provides a listing of recorded archaeological sites and historic/architectural properties that are included in the current MN SHPO databases. Because the majority of archaeological sites in the state and many historic/architectural properties have not been recorded, important sites or properties may exist within the search area and may be affected by development projects within that area. Additional research, including field survey, may be necessary to adequately assess the area's potential to contain historic properties.

Properties that are listed in the National Register of Historic Places (NRHP) or have been determined eligible for listing in the NRHP are indicated on the reports you have received. The following codes on the reports you received are:

NR – National Register listed. The properties may be individually listed or may be within the boundaries of a National Register District.

CEF – Considered Eligible Findings are made when a federal agency has recommended that a property is eligible for listing in the National Register and MN SHPO has accepted the recommendation for the purposes of the Review and Compliance Process. There properties need to be further assessed before they are officially listed in the National Register.

SEF – Staff eligible Findings are those properties the MN SHPO staff considers eligible for listing in the National Register, in circumstances other than the Review and Compliance process.

DOE – Determination of Eligibility is made by the National Park Service and are those properties that are eligible for listing in the National Register, but have not been officially listed.

CNEF – Considered Not Eligible Findings are made during the course of a Review and Compliance process. For the purposes of the review a property is considered not eligible for listing in the National Register. These properties may need to be reassessed for eligibility under additional or alternate contexts.

Properties without **NR, CEF, SEF, DOE, or CNEF** designations in the reports you received may not have been evaluated and therefore no assumption to their eligibility can be made. Integrity and contexts change over time, therefore any eligibility determination made ten (10) or more years for the date of the current survey are considered out of date and the property will need to be reassessed.

If you require a comprehensive assessment of a project's potential to impact archaeological sites or historic/architectural properties, you may need to hire a qualified archaeologist and/or historian. If you need assistance with a project review, please contact Kelly Gragg-Johnson in Review and Compliance @ 651-259-3455 or by email at kelly.graggjohnson@mnhs.org.

The Minnesota SHPO Survey Manuals and Database Metadata can be found at http://www.mnhs.org/shpo/survey/inventories.htm

MN SHPO research hours are 8:30 AM – 4:00 PM Tuesday-Friday. Please call ahead at 651-59-3450 to ensure staff is available to assist you, if necessary.

The Office is closed on Mondays.

On Wednesday, January 10, 2018 at 2:19:27 PM UTC-6, Tom Goodrum wrote:

Jesse,

Leslie Coburn directed me to you to request an EAW database search for historic properties at a site in the city of Hanover, Wright County. The site is located at

- Township – 120N, Range – 24W, Section – 34 (NE)
- South of CSAH 34, west of CSAH 19 and north of the Crow River
- Also see attached site location map

The EAW is an update to a previously approved EAW in 1999 for a 112.5 acre site to be developed into 274 single family lots. The developer completed over 100 of the lots before 2007 when the project stopped. In 2017 a new developer decided to finish the project. The city allowed him to develop 30 of the remaining lots but is requesting an EAW update for the rest. We did receive DNR Natural Heritage letter (reference #990724) The project name is West Crow River Heights.

Please let me know if you need anything else and the timing of your response.

COUNTY	SITENUM	SITENAME	TOW	RAN	SEC	XQUARTERS	ACR	WORI	DESCRIPT	TRADI1	CONTE:	ReportNum	Nati	CEF	DOE
Wright	21WRav	Schirmers	120	24	34	NE-NW	0		LS						

CROW RIVER HEIGHTS WEST RESIDENTIAL DEVELOPMENT

STS

Swing Traffic Solutions

TRAFFIC IMPACT STUDY

in

HANOVER, MN

February 19, 2018

Crow River Heights West Residential Development

Hanover, MN

TRAFFIC IMPACT STUDY

PROJECT NO. 2017023

February 19, 2018

I hereby certify that this plan, specification, or report was prepared by me, or under my direct supervision, and that I am a duly Registered Professional Engineer under the laws of the State of Minnesota:

Vernon E. Swing, P.E.

Date: 2-19-2018 Lic. No.: 41417

TRAFFIC IMPACT STUDY

Crow River Heights West Residential Development

Hanover, MINNESOTA

February 19, 2018

Prepared For:

Backes Companies
11413 Ashbury Circle N.
Champlin, MN 55316

Prepared By:

Swing Traffic Solutions, LLC
4290 Norwood Lane North
Plymouth, MN 55442
612-968-4142

Project No. 2017023

TABLE OF CONTENTS

I. INTRODUCTION 1

II. EXISTING TRAFFIC CONDITIONS 4

A. Data Collection 4
B. Roadway Description 4
C. Intersection Description 7

III. NO-BUILD ALTERNATIVE 9

A. Background Growth 9
B. Anticipated Improvements for No-Build Conditions 9
C. Results of Analysis 10

IV. BUILD ALTERNATIVE 13

A. Site-Generated Traffic 13
B. Trip Distribution and Assignment 13
C. Build Traffic Volumes 16
D. Intersection Operational Analysis Description 16
E. Results of Analysis 19
F. 2040 Operations 20

VI. SUMMARY AND SUGGESTIONS 24

LIST OF TABLES

Table ..... Page Number

1. Trip Generation 13
2. 2021 No-Build Operations 19
3. 2021 Build Operations 20
4. 2040 No-Build Operations 21
5. 2040 Mitigated No-Build Operations 23
6. 2040 Build Operations 23

LIST OF FIGURES

Figure ..... Page Number

1. Vicinity Map 2
2. Site Plan 3
3. Existing Peak Hour Traffic Volumes 6
4. 2025 No-Build AM and PM Peak Traffic 11
5. 2040 No-Build AM and PM Peak Traffic 12
6. Trip Distribution 14
7. Trip Assignment 15
8. 2025 Build AM and PM Peak Traffic 17
9. 2040 Build AM and PM Peak Traffic 18
10. Proposed Improvements 22

TECHNICAL APPENDICES

(Available upon Request)

A. TRAFFIC COUNTS

B. TRIP GENERATION CALCULATIONS

C. RESULTS OF OPERATIONAL ANALYSES

I. INTRODUCTION

Backes Companies proposes to complete development of the remaining approximately 75-acres of the larger site referred to as Crow River Heights West in Hanover, Minnesota as single family detached residential homes. The remaining project will consist of 166 units. For the purposes of this study, it is anticipated that construction will be complete, and the facilities fully occupied by 2025.

The remainder of Crow River Heights West is located to the south of Beebe Lake Road NE, and is generally west of Kadler Avenue NE. It is located approximately ½ mile north of River Road NE, and about ½ mile west of Kayla Lane. The site location is illustrated on Figure 1, "Vicinity Map".

Access to the site is proposed via Kadler Avenue NE from the north and via an extension of Kadler Avenue NE to the south as well as via an extension of Jandel Avenue NE to the south. The location of these accesses are illustrated on the Concept Site Plan, Figure 2.

The purpose of this study is to support to the EAW completed for the Crow River Heights West development, particularly to evaluate the impact of traffic generated by the proposed continued development of Crow River Heights West on the operations and safety of the adjacent roadway network. The study focuses on the roads and intersections that provide direct and indirect access into the site. This study details the existing and future roadway conditions at studied intersections and includes traffic volumes, lane geometrics and traffic operational analysis results. Recommendations regarding roadway improvements to accommodate the anticipated growth in background traffic are included as necessary.

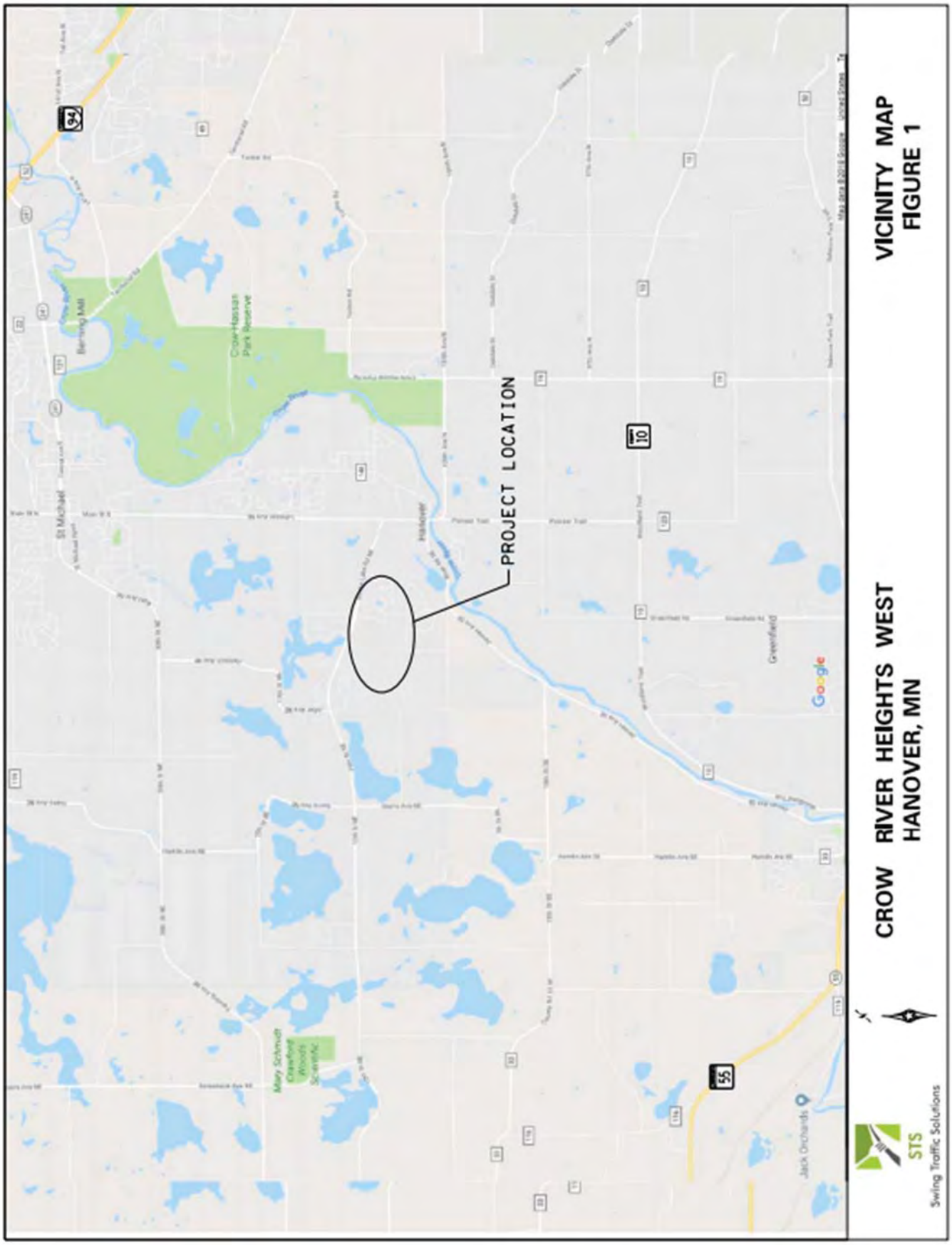
PROJECT LOCATION
Crow-Hassan Park Reserve
Barning Mill
St Michael
Hanover
Pioneer Trail
Greenfield
Mary Schmidt Crawford Woods Scientific
Jack Orchards
Google
34
10
55
CROW RIVER HEIGHTS WEST
HANOVER, MN
VICINITY MAP
FIGURE 1
STS
Swing Traffic Solutions

Beebe Lake Rd NE
(CSAH 34)
City of Hanover
Kadler Ave NE
4TH St NE
CROW RIVER HEIGHTS WEST
HANOVER, MN
SITE MAP
FIGURE 2
STS
Swing Traffic Solutions

I. Existing Conditions

A. Data Collection

The existing conditions of the nearby roadway system were documented by a field inventory conducted during the week of January 22, 2018. The purpose was to identify features that affect roadway capacity, including traffic control, sight distances, turn lanes, speed limits, etc. In addition, turning movement traffic counts were conducted revealing the AM Peak hour occurs at 6:45 – 7:45 AM and the PM Peak hour at 4:00 – 5:00 PM at the following intersections:

- Beebe Lake Road NE and Kadler Avenue NE
- Beebe Lake Road NE and Kayla Lane
- Beebe Lake Road NE and Labeaux Avenue NE
- Labeaux Avenue NE and River Road NE
- River Road NE and Division Street E

Figure 3 illustrates the existing AM and PM Peak hour turning movement counts. Also, the average daily traffic volume for Beebe Lake Road NE, River Road NE, and Labeaux Avenue NE has been collected and published by MnDOT as 4,700 vehicles per day, 3,450 vehicles per day, and 11,600 vehicles per day, respectively.

B. Roadway Descriptions

The existing geometrics of the Study Area Roadway Network have been document based on a field review. The discussion that follows details specific items such as lane and shoulder layout, roadway classifications, and turn lane storage lengths.

- **Beebe Lake Road NE,** which runs east/west along the northern border of the site, is a County

State Aid Highway (CSAH 34) and is functionally classified as a Major Collector. It provides direct access to the site at Kadler Avenue NE and indirectly at Kayla Lane. In the study area, Beebe Lake Road NE is a two-lane undivided facility including right and left turn lanes at critical intersections. It has a rural cross-section and is a 55-mph speed limit facility.

- **Lebeaux Avenue NE,** which runs north south in the study area is a County State Aid Highway (CSAH 19) and is classified as a B Minor Arterial. It has an undivided three-lane footprint with a rural cross-section beginning at Beebe Lake Road NE and continuing to the south to just north of 5th Street NE. From north of 5th Street NE the cross-section changes to an urban 3-lane cross-section which continues to the south across the Crow River Bridge. There are left and right turn lanes at critical intersections. It is signed for 30 mph through the heart of town. Labeaux Avenue NE provides access to the region and indirect access to the site via its intersections with Beebe Lake Road NE and River Road NE.

- **River Road NE,** which runs east west in the study area is a County State Aid Highway (CSAH 20) and is classified as a Major Collector. It has an undivided two-lane footprint with a rural cross-section and is signed for 30 mph from its intersection with Labeaux Avenue NE to approximately ½ mile east of Division Street E then changes to 55 mph. It provides indirect access to the site via its intersection with Division Street E. (See Figure 2).

- **Kadler Avenue NE and Kayla Lane,** run north south and are local streets that provide direct access to site. They are two lane roads with undivided urban cross-sections and are 30 mph facilities.

- **Division Street E and Jandel Avenue NE,** are local streets expected to provide access to the site from the south via the intersection of Division Street E with River Road NE, and the intersections of Division Street E with Kadler Avenue NE and Jandel Avenue NE.

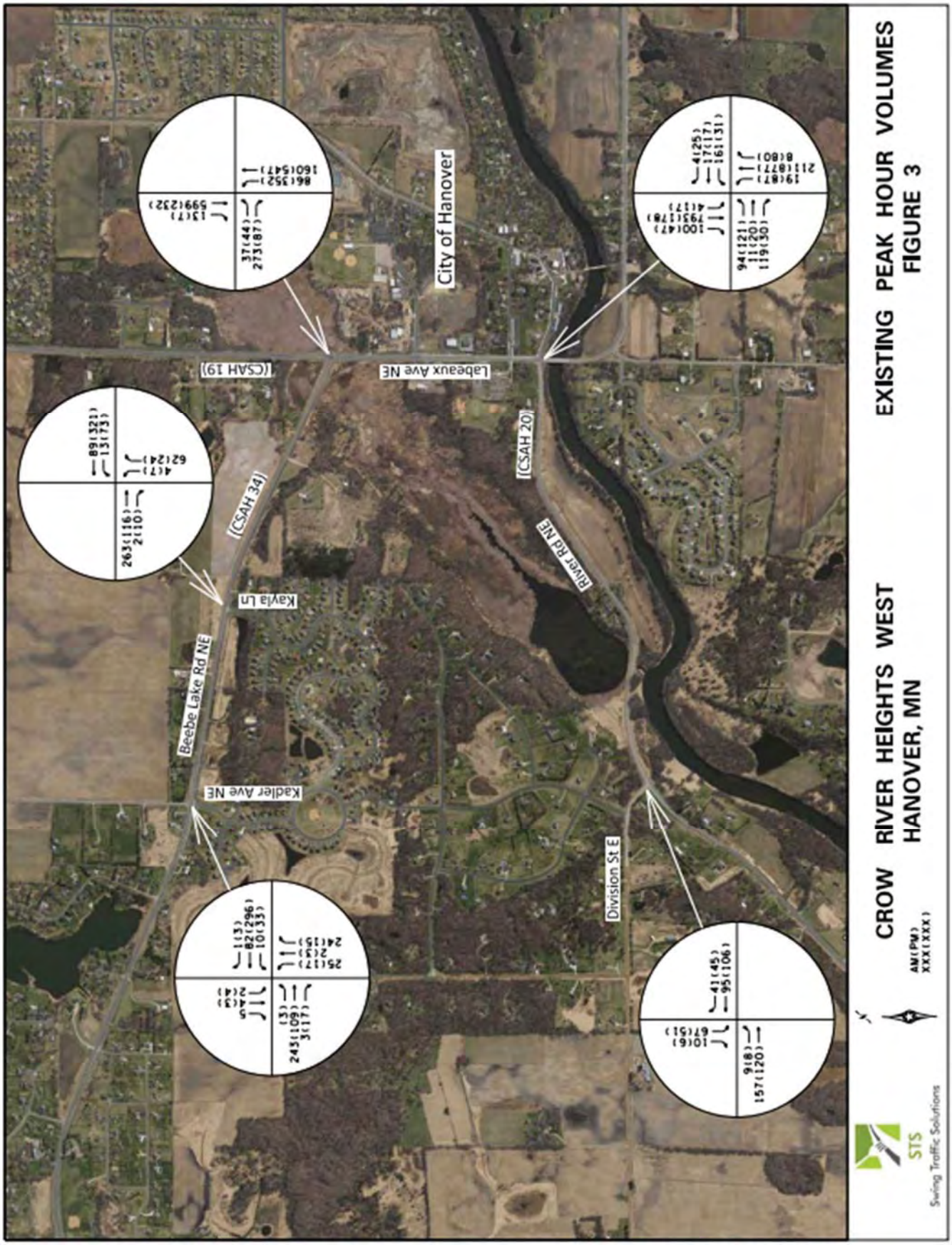
City of Hanover
(CSAH 19)
Labeaux Ave NE
(CSAH 20)
(CSAH 34)
River Rd NE
Kayla Ln
Beebe Lake Rd NE
Kadler Ave NE
Division St E
CROW RIVER HEIGHTS WEST
HANOVER, MN
AM(PM)
XXX(XXX)
EXISTING PEAK HOUR VOLUMES
FIGURE 3
STS
Swing Traffic Solutions

C. Intersection Descriptions

- **Kadler Avenue NE and Beebe Lake Road NE,** form a four-legged unsignalized intersection north of the site. All Kadler Avenue NE approaches are two lanes, one lane entering and one lane exiting the intersection and are stop controlled. The Beebe Lake Road NE approaches are free flowing and include left and right turn lanes.

- **Kayla Lane and Beebe Lake Road NE** form a three-legged unsignalized intersection north and east of the site. The Kayla Lane approach is stop controlled and has two lanes, one lane entering and one lane exiting the intersection. The Beebe Lake Road NE approaches are free flowing, and the eastbound approach provides a through lane and a right turn lane, while the westbound approach includes a through lane and left turn by-pass lane.

- **Beebe Lake Road NE and Labeaux Avenue NE** form a three-legged signalized intersection east of the site. All approaches are three lanes, two lanes entering and one lane exiting the intersection. The Beebe Lake Road NE approach includes a left turn and a right turn lane. The northbound Labeaux Avenue NE approach includes a left turn lane and a through lane, while the southbound approach includes a right turn lane and a through lane.

- **Labeaux Avenue NE and River Road NE** form a four-legged, signalized intersection southeast of the site. The west approach includes a dedicated left turn lane, and a shared through/right lane entering the intersection and one lane leaving the intersection. The south and east approaches are the same. The north approach to the intersection includes a dedicated right turn and a dedicated left turn lane and one through lane entering the intersection, and one lane exiting the intersection.

- **River Road NE and Division Street E** form a three-legged unsignalized intersection south of the site. The Division Street E approach is stop controlled and has two lanes, one lane entering and one lane exiting the intersection. The River Road NE approaches are free flowing, and the westbound approach provides a through lane and a right turn lane, while the eastbound approach includes a through lane and left turn by-pass lane.

III. NO-BUILD ALTERNATIVE

To address the impacts of a development on the surrounding roadway system, it is necessary to predict the traffic that would be present on the roadway system at the time (the design year) of completion of the proposed development, without the inclusion of the proposed development. This is considered the No-Build scenario, and serves as a basis with which to compare Build scenarios. In this study two design years were analyzed 2025, the year after the development is fully built and occupied, and 2040, the current planning year horizon.

A. Background Growth

Review of the original EAW completed for Crow River Heights, the latest City of Hanover Comprehensive Transportation Plan, and historical traffic counts results in differing estimates of future conditions. The traffic growth rates utilized in the original EAW, completed in 1999, suggest traffic over the twenty-year time horizon would grow at an annual rate of 1.6 percent per year. The City of Hanover Comprehensive Transportation Plan completed in 2006 suggested traffic counts would grow at an annual rate of 6.5 percent per year. Review of historical counts from MnDOT indicate traffic has actually grown at 1.67 percent per year from 1998 to 2016. Swing Traffic Solutions utilized an annual rate of 2 percent per year to predict and model the 2025 and 2040 no build conditions to ensure a conservative estimate. Figures 4 and 5 reflects the estimated future background volumes for the 2025 and 2040 design years.

B. Anticipated Improvements for No-Build Conditions

The 2006 Hanover Comprehensive Transportation Plan identified road improvements that would be required to manage the anticipated growth in traffic. At this time no improvements are expected to occur to study area intersections or roadways prior to 2025.

C. Results of Analysis

The study area intersections identified in Section II were analyzed for the 2025 and 2040 No-Build scenarios. Complete discussion of the results of these analyses is provided in Section IV, where a comparison with corresponding design year Build alternatives are made.

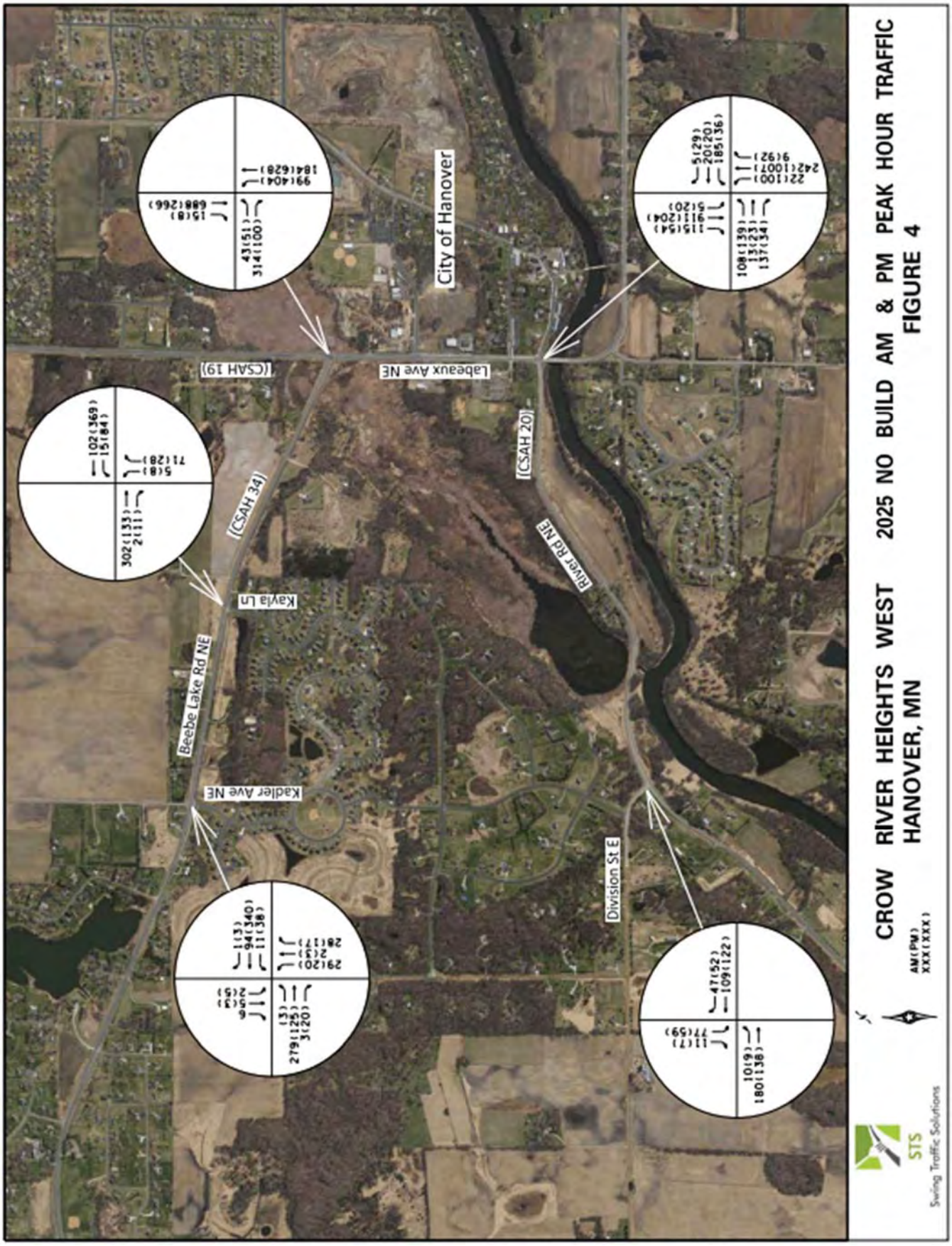

CROW RIVER HEIGHTS WEST 2025 NO BUILD AM & PM PEAK HOUR TRAFFIC
HANOVER, MN
FIGURE 4

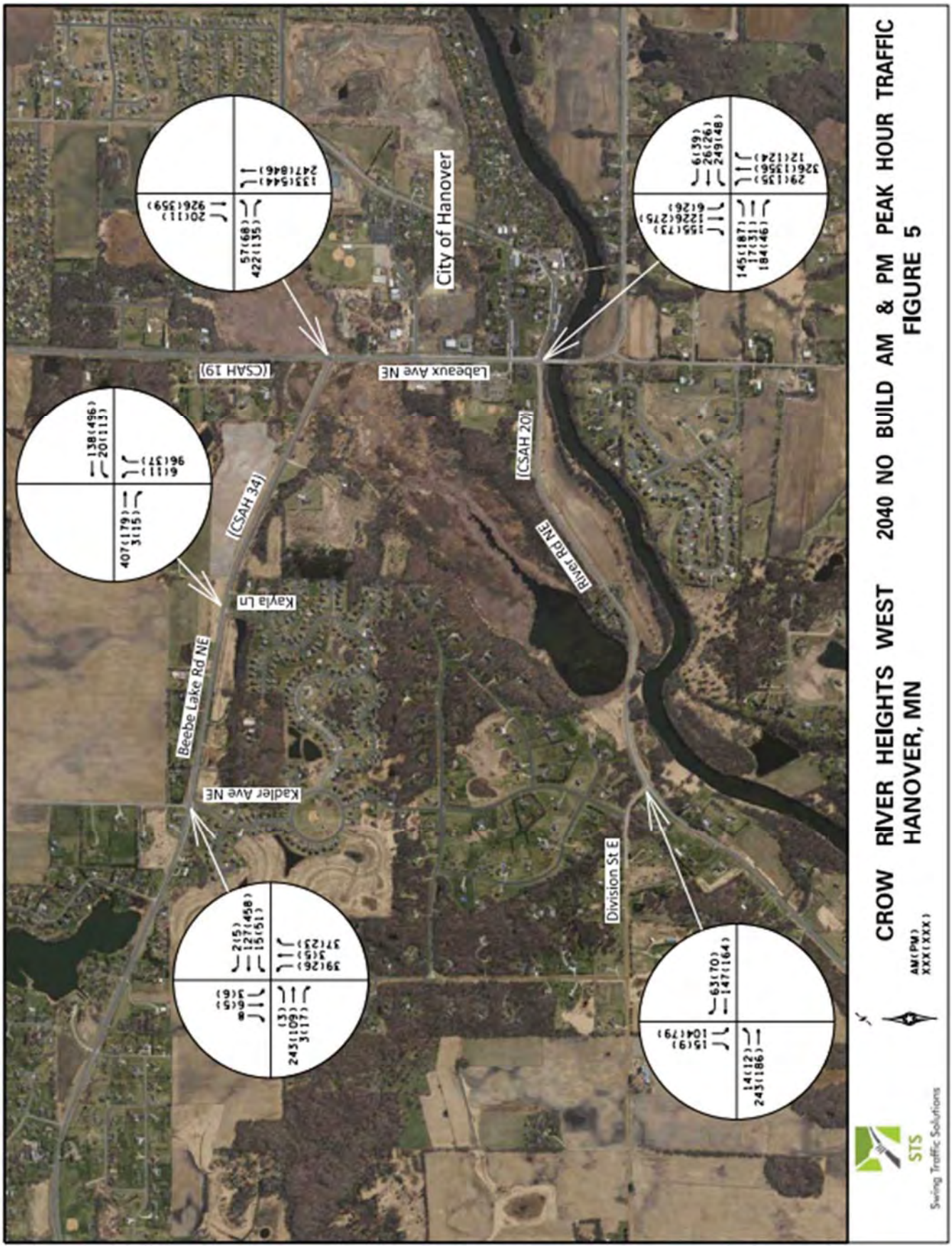
CROW RIVER HEIGHTS WEST 2040 NO BUILD AM & PM PEAK HOUR TRAFFIC
HANOVER, MN
FIGURE 5
AM(PM)
XXX(XXX)
STS
Swing Traffic Solutions
City of Hanover
(CSAH 19)
Labeaux Ave NE
(CSAH 20)
River Rd NE
(CSAH 34)
Kayla Ln
Beebe Lake Rd NE
Kadler Ave NE
Division St E
407(179)
3(15)
138(496)
20(113)
61(37)
(11)
57(68)
422(135)
247(846)
133(544)
20(11)
926(359)
2(5)
127(458)
15(51)
39(26)
3(5)
37(23)
(3)
243(109)
3(17)
3(6)
(5)
(9)
63(70)
147(164)
15(9)
104(79)
14(12)
243(186)
145(187)
17(31)
184(46)
155(73)
1226(275)
61(26)
29(135)
326(1356)
12(124)
6(39)
26(126)
249(48)

IV. BUILD ALTERNATIVE

A. Site-Generated Traffic

The number of vehicle trips generated by the remaining 166 units to be developed as part of the Crow River Heights West residential development were estimated for the weekday daily, and AM and PM traffic peak hours using the data and methodologies contained in the 10th Edition of Trip Generation, published by the Institute of Transportation Engineers (ITE). Table 1 summarizes the trip generation estimates.

Table 1
Trip Generation

Land Use	AM Peak Hour		PM Peak Hour		Daily Trips
	Enter	Exit	Enter	Exit	
Single Family Homes (166 Homes)	31 Trips	92 Trips	104 Trips	61 Trips	1,567 Trips
TOTAL	**123 Trips**		**165 Trips**		**1,567 Trips**

1. Per the data and methodologies in Trip Generation, 10th Edition, published by ITE.

B. Trip Distribution and Assignment

The distribution of site-generated traffic from and to the adjacent street system was based on existing traffic patterns. Figure 6, titled "Trip Distribution," depicts the distribution of the estimated site-generated traffic entering and exiting the study area roadway network. Traffic was assigned to the roadway network on the route that would minimize travel time. Figure 7, titled "Trip Assignment," illustrates the estimated changes in traffic volume on the study area roadways associated with the proposed redevelopment.

City of Hanover
5%
60%
Labeaux Ave NE
(CSAH 19)
(CSAH 20)
(CSAH 34)
River Rd NE
Kayla Ln
Beebe Lake Rd NE
15%
Kadler Ave NE
20%
Division St E
CROW RIVER HEIGHTS WEST
HANOVER, MN
TRIP DISTRIBUTION
FIGURE 6
STS
Swing Traffic Solutions

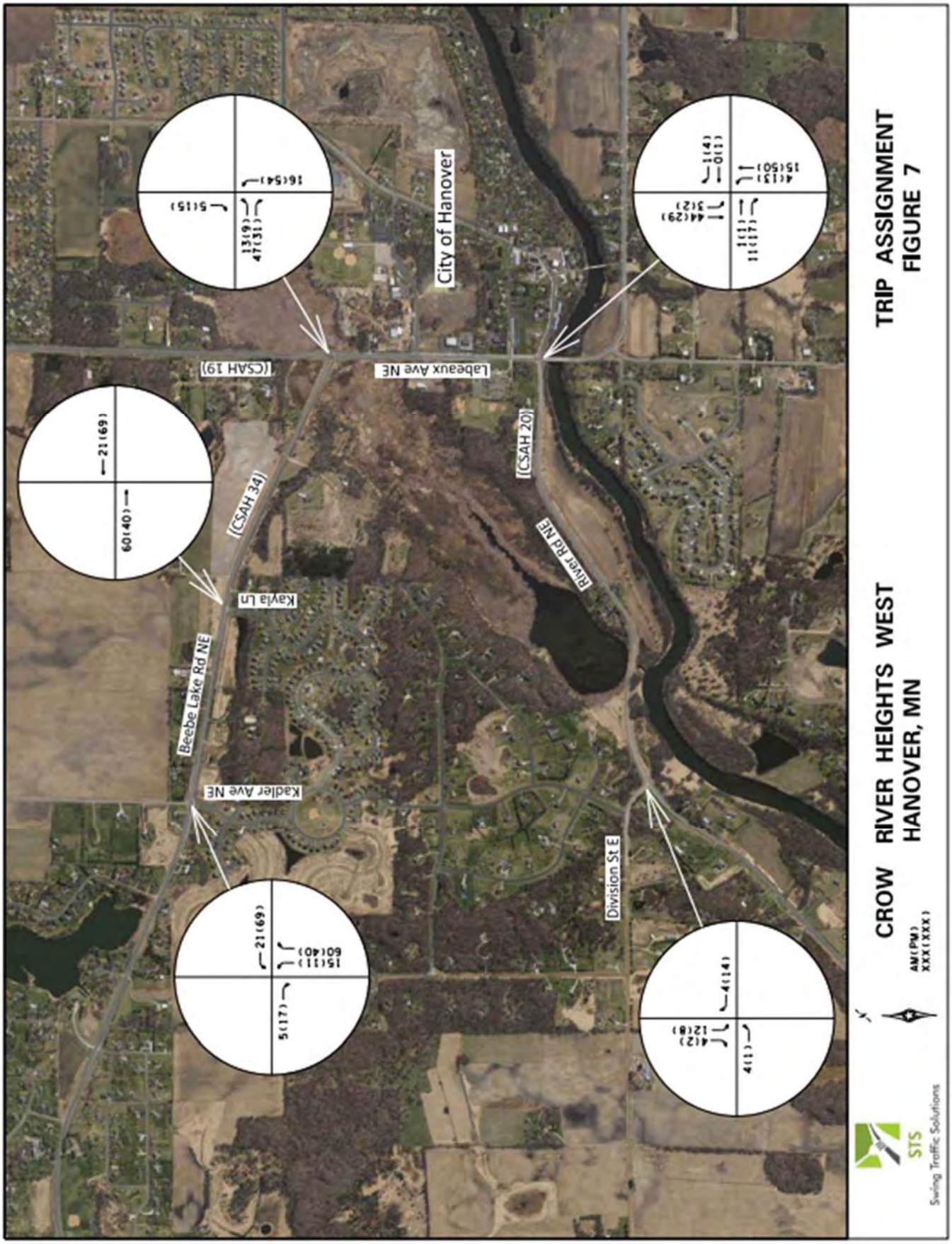
City of Hanover
Labeaux Ave NE
(CSAH 19)
(CSAH 20)
(CSAH 34)
River Rd NE
Kayla Ln
Beebe Lake Rd NE
Kadler Ave NE
Division St E
21(69)
60(40)
21(69)
15(11)
60(40)
5(17)
4(1)
4(2)
12(8)
4(1)
13(9)
47(3)
16(54)
5(15)
1(1)
11(1)
44(29)
31(2)
1(4)
0(1)
15(50)
4(13)
STS
Swing Traffic Solutions
AM(PM)
XXX(XXX)
CROW RIVER HEIGHTS WEST
HANOVER, MN
TRIP ASSIGNMENT
FIGURE 7

C. Build Traffic Volumes

When combined, the site-generated traffic volumes and No-Build scenario traffic volumes result in the Build scenario traffic volumes, shown on Figures 8 and 9 for the 2025 and 2040 design years, respectively.

D. Intersection Operational Analysis Description

The operating conditions of transportation facilities, such as roadways, traffic signals and stop-controlled intersections, are evaluated based on the relationship of the theoretical capacity of a facility to the actual traffic volume on that facility. Various factors affect capacity including travel speed, roadway geometry, grade, number of travel lanes, and intersection control. The current standards for evaluating capacity and operating conditions are contained in the 6th Edition of Highway Capacity Manual, published by the Transportation Research Board. The procedures describe operating conditions in terms of driver delay represented as a Level of Service (LOS). Operations are given letter designations with "A" representing the best operating conditions and "F" representing the worst. Generally, level of service “D” represents the threshold for acceptable overall intersection operating conditions during a peak hour.

A final fundamental component of operational analyses is a study of vehicular queuing, or the line of vehicles waiting to pass through an intersection. An intersection can operate with an acceptable Level of Service, but if queues from the intersection extend back to block entrances to turn lanes or accesses to adjacent land uses, unsafe operating conditions could result. In this report, the Industry Design Standard 95th percentile queue length is used. The 95th Percentile Queue Length refers to that length of vehicle queue that has only a five-percent probability of occurring during an analysis hour.

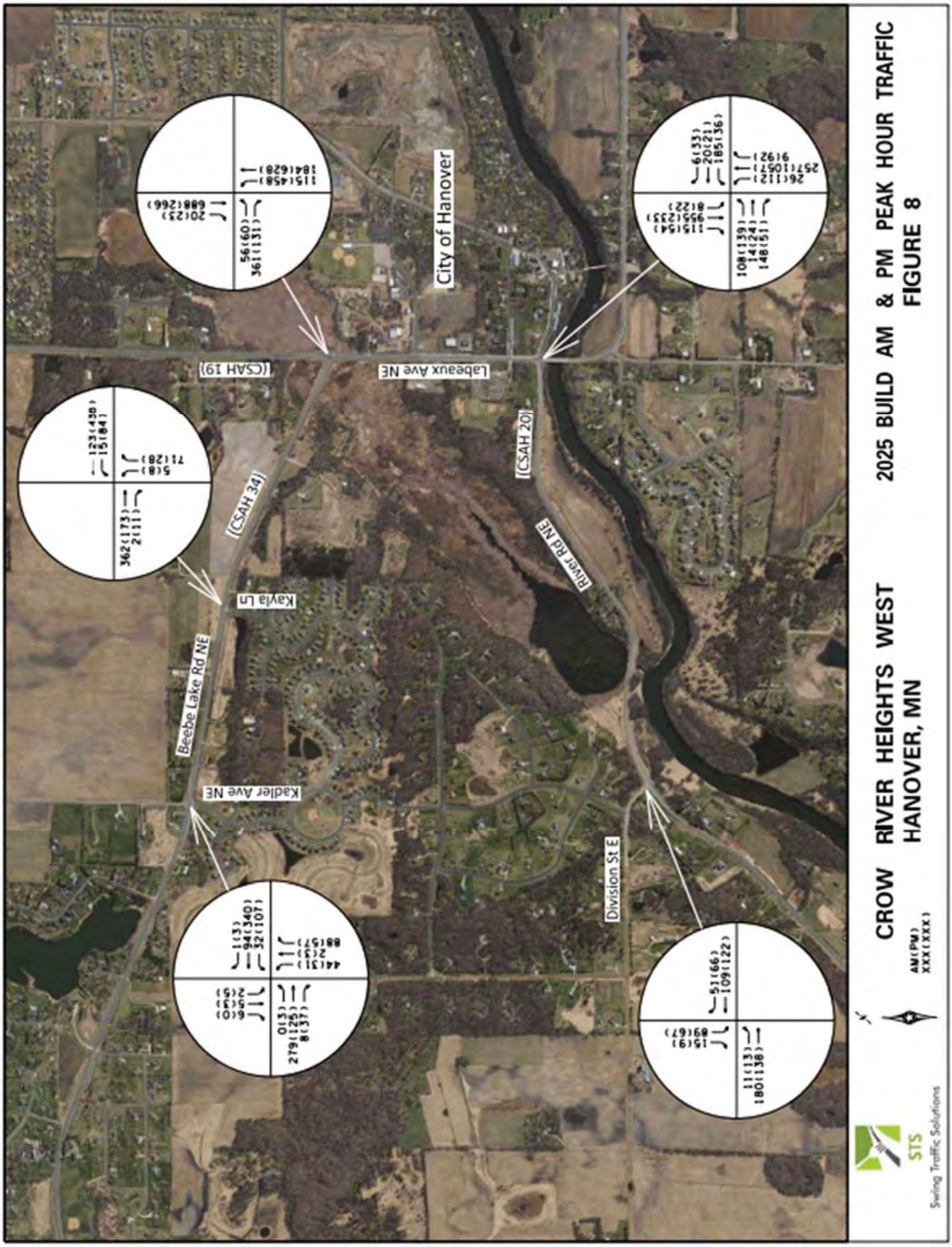
City of Hanover
(CSAH 19)
Labeaux Ave NE
(CSAH 20)
(CSAH 34)
River Rd NE
Kayla Ln
Beebe Lake Rd NE
Kadler Ave NE
Division St E
2025 BUILD AM & PM PEAK HOUR TRAFFIC
FIGURE 8
CROW RIVER HEIGHTS WEST
HANOVER, MN
AM(PM)
XXX(XXX)
STS
Swing Traffic Solutions

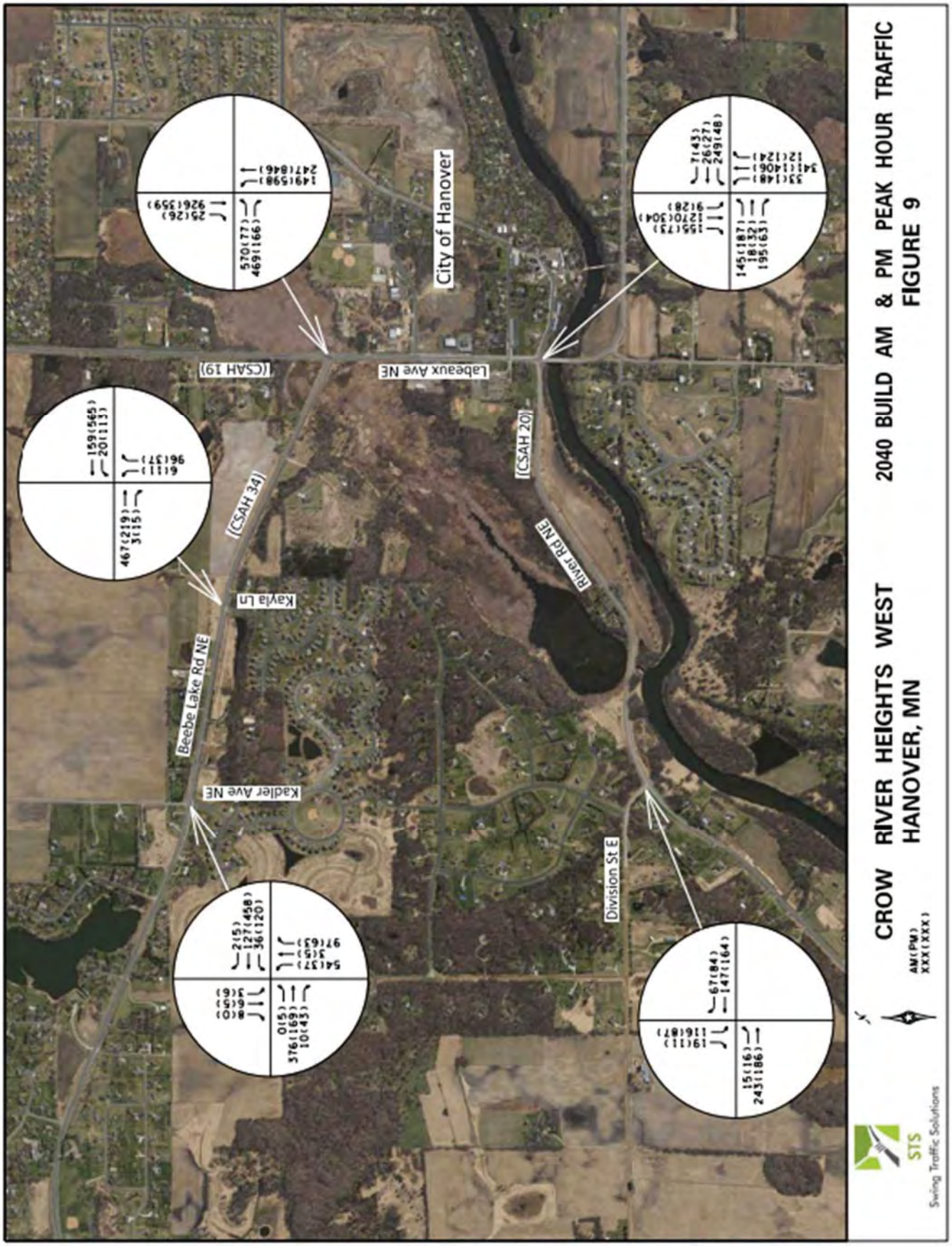
City of Hanover
(CSAH 19)
Labeaux Ave NE
(CSAH 20)
River Rd NE
(CSAH 34)
Kayla Ln
Beebe Lake Rd NE
Kadler Ave NE
Division St E
159(565)
201(113)
467(219)
3(15)
61(11)
96(37)
25(26)
926(359)
570(77)
4691(166)
1491(598)
247(846)
7(43)
26(27)
249(48)
145(187)
18(32)
195(63)
1955(73)
1270(304)
912(8)
35(148)
34(1406)
12(124)
2(15)
127(458)
36(120)
8(0)
5(5)
6(5)
376(169)
0(5)
10(43)
54(37)
3(5)
97(63)
67(84)
147(164)
19(11)
116(87)
15(16)
243(186)
CROW RIVER HEIGHTS WEST
HANOVER, MN
AM(PM)
XXX(XXX)
2040 BUILD AM & PM PEAK HOUR TRAFFIC
FIGURE 9
STS
Swing Traffic Solutions

E. Results of Analysis

This section contains the results of the intersection operational analyses and provides recommendations, as necessary to mitigate the impacts. Table 2 and Table 3 summarize the results of the operational analyses for the 2025 No Build and Build scenarios, respectively.

Table 2
2025 No-Build Operations

Intersection	Overall LOS		Notes/95th Percentile Q
	AM Peak Hour	PM Peak Hour	
Kadler Ave NE and Beebe Lake Rd NE	a (b nb)	a (b sb)	NB Q is 45 ft in AM
Kayla Ln and Beebe Lake Rd NE	a (b nb)	a (b nb)	NB Q is 61 ft in AM
Labeaux Ave NE and Beebe Lake Rd NE	B (C eb)	A (C eb)	SB Q is 397 ft in AM
Labeaux Ave NE and River Rd NE	C (D wb)	C (D eb)	SB Q is 912 ft in AM; NB Q is 785 ft in PM
River Rd NE and Division St E	a (b sb)	a (b sb)	SB Q is 55 ft in AM

1. Overall Level of Service reported from Synchro 10, first letter represents intersection LOS, while second letter represents worst LOS of individual approach. Upper case letters indicate signalized intersection, and lower-case letters indicate unsignalized intersection
2. 95th percentile queues are a result from an average of 10 SimTraffic simulations.

The results shown in Table 2 indicate all intersections are expected to operate at acceptable overall LOS in 2025 without the proposed project. That said, the southbound movement at the intersection of Labeaux Avenue NE and River Road NE will be operating with long vehicle queues during the AM peak traffic hour, and similarly the northbound movement will be operating with long queues during the PM peak traffic hour. Review of the SimTraffic simulation suggests these queues are managed during each signal cycle, however, this is indicative that additional capacity should be considered for north and southbound traffic on Labeaux. This intersection should be monitored over the coming years as traffic volumes increase for potential improvements such as the installation of an additional through lane in each direction from Beebe Lake Rd to the south across the Crow River Bridge.

The 2025 Build analysis includes traffic from the proposed development. Table 3 contains a summary of the analysis results.

Table 3
2025 Build Operations

Intersection	Overall LOS		Notes/95th Percentile Q
	AM Peak Hour	PM Peak Hour	
Kadler Ave NE and Beebe Lake Rd NE	a (b nb)	a (c sb)	NB Q is 61 ft in AM
Kayla Ln and Beebe Lake Rd NE	a (b nb)	a (b nb)	NB Q is 59 ft in AM
Labeaux Ave NE and Beebe Lake Rd NE	B (C eb)	A (C eb)	SB Q is 400 ft in AM
Labeaux Ave NE and River Rd NE	C (D wb)	C (D eb)	SB Q is 940 ft in AM; NB Q is 780 ft in PM
River Rd NE and Division St E	a (b sb)	a (b sb)	SB Q is 74 ft in AM

3. Overall Level of Service reported from Synchro 10, first letter represents intersection LOS, while second letter represents worst LOS of individual approach. Upper case letters indicate signalized intersection, and lower-case letters indicate unsignalized intersection.
4. 95th percentile queues are a result from an average of 10 SimTraffic simulations.

Again, the results shown in Table 3 indicate all intersections are expected to operate at acceptable overall LOS in 2025 with the proposed project. In particular, the intersections providing access to the site are expected to operate at LOS A with all approaches at LOS B or better with short vehicle queues, which suggests the drivers at these intersections will experience very little delay and is indicative of appropriate access for the site. Again, the southbound movement at the intersection of Labeaux Avenue NE and River Road NE will be operating with long vehicle queues during the AM peak traffic hour, and similarly the northbound movement will be operating with long vehicle queues during the PM peak traffic hour. This intersection should be monitored over the coming years as traffic volumes increase for potential improvements.

F. 2040 Operations

The long-range planning horizon year is 2040, as mentioned in the No-Build section. The results of the analysis of the 2040 No-Build traffic conditions, which continue to reflect a 2 percent annual growth rate are summarized in Table 4.

Table 4
2040 No-Build Operations

Intersection	Overall LOS		Notes/95th Percentile Q
	AM Peak Hour	PM Peak Hour	
Kadler Ave NE and Beebe Lake Rd NE	a (b nb)	a (c sb)	NB Q is 62 ft in AM
Kayla Ln and Beebe Lake Rd NE	a (b nb)	a (b nb)	NB Q is 61 ft in AM
Labeaux Ave NE and Beebe Lake Rd NE	C (D eb)	A (C eb)	EB Q in the AM is 1,669 ft, and SB Q is 1,167 ft in AM
Labeaux Ave NE and River Rd NE	D (F wb)	E (E eb)	SB Q is 2,892 ft in AM; NB Q is 1,898 ft in PM
River Rd NE and Division St E	a (b sb)	a (b sb)	SB Q is 79 ft in PM

5. Overall Level of Service reported from Synchro 10, first letter represents intersection LOS, while second letter represents worst LOS of individual approach. Upper case letters indicate signalized intersection, and lower-case letters indicate unsignalized intersection
6. 95th percentile queues are a result from an average of 10 SimTraffic simulations.

The results shown in Table 4 indicate some of the approaches to the intersection of Labeaux Avenue NE and River Road NE are at or over capacity during the 2040 AM and PM peak hours. Further, the intersections of Beebe Lake Road NE and River Road NE with Labeaux Avenue NE will experience very long vehicle queues that are not able to clear during each signal cycle. It is suggested that Labeaux Avenue NE be improved to provide an additional through lane in each direction beginning just to the north of the intersection with Beebe Lake Road and continuing to the south beyond the Crow River bridge, with left turn lanes at critical intersections. Figure 10 conceptually illustrates potential improvements.

It is assumed that capacity improvements will occur between now and 2040 that will result in improved operations. Traffic operations have been tested for the suggested improvements, and the results for the mitigated 2040 No-Build conditions are summarized in Table 5.

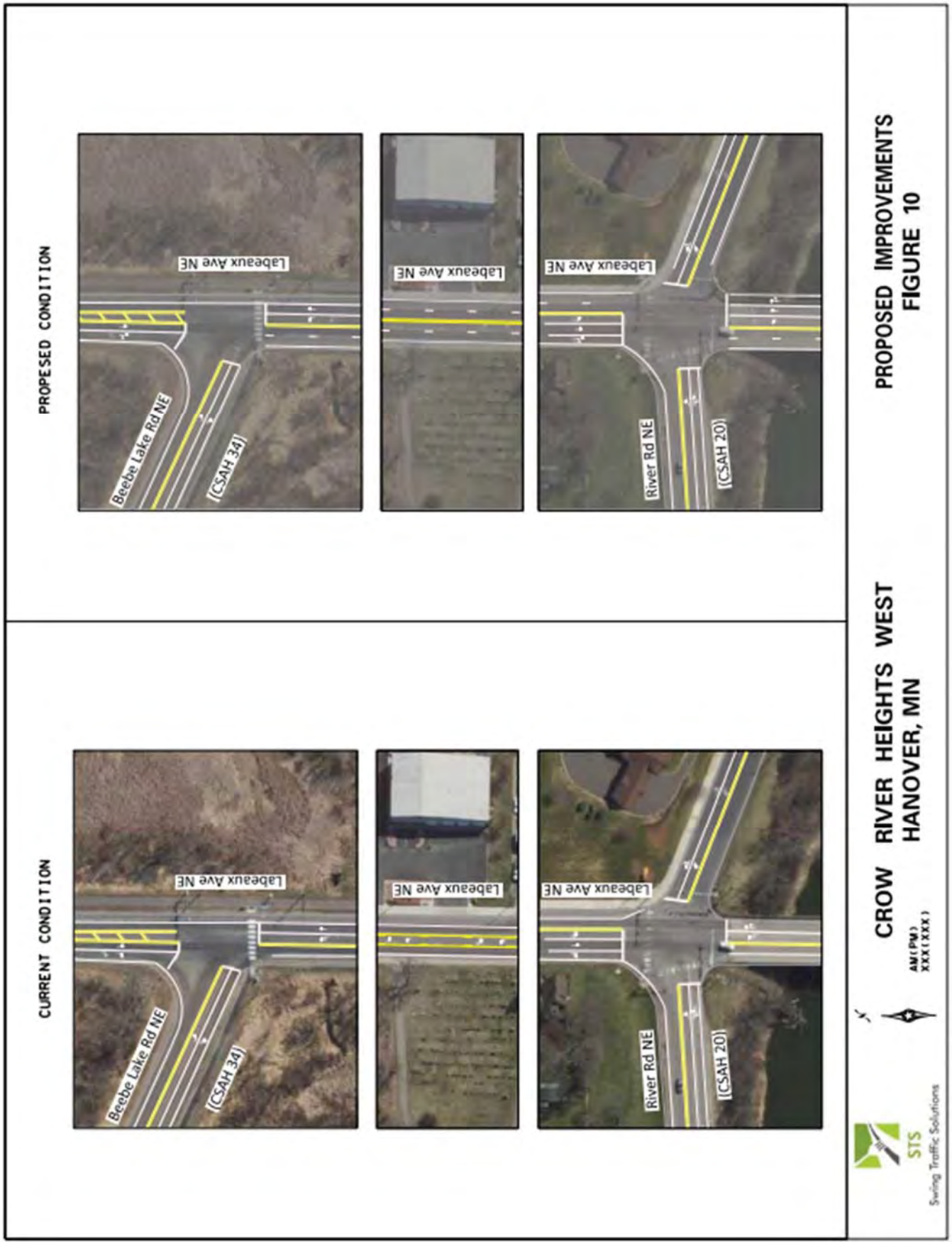
PROPESED CONDITION
Beebe Lake Rd NE
(CSAH 34)
Labeaux Ave NE
Labeaux Ave NE
River Rd NE
(CSAH 20)
Labeaux Ave NE
CURRENT CONDITION
Beebe Lake Rd NE
(CSAH 34)
Labeaux Ave NE
Labeaux Ave NE
River Rd NE
(CSAH 20)
Labeaux Ave NE
STS
Swing Traffic Solutions
AM (PM)
XXX (XXX)
CROW RIVER HEIGHTS WEST
HANOVER, MN
PROPOSED IMPROVEMENTS
FIGURE 10

Table 5
2040 Mitigated No-Build Operations

Intersection	Overall LOS		Notes/95th Percentile Q
	AM Peak Hour	PM Peak Hour	
Kadler Ave NE and Beebe Lake Rd NE	a (b nb)	a (c sb)	NB Q is 62 ft in AM
Kayla Ln and Beebe Lake Rd NE	a (b nb)	a (b nb)	NB Q is 57 ft in AM
Labeaux Ave NE and Beebe Lake Rd NE	B (C eb)	A (C eb)	NB Q is 313 ft in PM
Labeaux Ave NE and River Rd NE	C (D wb)	B (D eb)	SB Q is 429 ft in AM; NB Q is 332 ft in PM
River Rd NE and Division St E	a (b sb)	a (b sb)	SB Q is 69 ft in AM

7. Overall Level of Service reported from Synchro 10, first letter represents intersection LOS, while second letter represents worst LOS of individual approach. Upper case letters indicate signalized intersection, and lower-case letters indicate unsignalized intersection.
8. 95th percentile queues are a result from an average of 10 SimTraffic simulations.

The results shown in Table 5 indicate all intersections are expected to operate at acceptable overall LOS in the Mitigated 2040 No-Build scenario. It is noted, the 95th percentile queues at all intersection are shorter than the 2025 No-Build scenario and dissipate during each traffic signal cycle.

The analyses of the 2040 Build conditions assume capacity improvements have been made along Labeaux Avenue NE as reflected in the Mitigated 2040 No-Build scenario. Table 6 summarizes the results of the 2040 Build analysis.

Table 6
2040 Build Operations

Intersection	Overall LOS		Notes/95th Percentile Q
	AM Peak Hour	PM Peak Hour	
Kadler Ave NE and Beebe Lake Rd NE	a (c nb)	a (c sb)	NB Q is 72 ft in AM
Kayla Ln and Beebe Lake Rd NE	a (b nb)	a (b nb)	NB Q is 53 ft in AM
Labeaux Ave NE and Beebe Lake Rd NE	B (C eb)	A (C eb)	NBL Q is 334 ft in PM
Labeaux Ave NE and River Rd NE	C (D wb)	B (D eb)	SB Q is 435 ft in AM; NB Q is 382 ft in PM
River Rd NE and Division St E	a (b sb)	a (b sb)	SB Q is 73 ft in AM

9. Overall Level of Service reported from Synchro 10, first letter represents intersection LOS, while second letter represents worst LOS of individual approach. Upper case letters indicate signalized intersection, and lower-case letters indicate unsignalized intersection.
10. 95th percentile queues are a result from an average of 10 SimTraffic simulations.

Again, the results shown in Table 6 indicate all intersections are expected to operate at acceptable overall LOS in the Build 2040 scenario, with manageable queues.

V. SUMMARY AND SUGGESTIONS

The preceding analysis has evaluated the potential traffic impacts of the proposed completion of the Crow River Heights West development as residential units, on the operations of the study area intersections. The site is located along the south side of Beebe Lake Road generally west of Kadler Avenue NE in the City of Hanover, Minnesota.

Two design years were considered in this study, 2025 to correspond to the year after build out and 2040 to remain consistent with the long range planning horizon. For both design years a No-Build and Build scenario, was analyzed and compared to assess the development's impact, and the area's future infrastructure needs. Development of the residential homes on the remaining Crow River Heights West site by 2025 is expected to result in approximately 1,567 new vehicle trips on the study area roadway network per average weekday. Peak hour trips generated by the development are estimated at 123 during the AM peak hour and 165 during the PM peak hour. These trips were distributed through the site access routes to the regional roadways according to existing regional patterns. Growth in background traffic at rate of 2 percent per year was accounted for in the analysis.

Results of the operational analyses in the 2025 and 2040 No-Build and 2025 and 2040 Build scenarios indicate there is no change in overall traffic operations at the study area intersections associated with the build out of the remainder of the West River Heights development. However, by 2025 the intersection of Labeaux Avenue NE and River Road West will experience long vehicle queues in the southbound direction in the AM and in the northbound direction in the PM. This is due to the large directional peaking characteristic of home to work drivers. It is suggested Labeaux Avenue NE be improved to include 2 through traffic lanes in each direction from Beebe Lake Road on the north, to the south side of the Crow

River Bridge on the south to manage No-Build traffic conditions after the year 2025. Comparison of mitigated 2040 No-Build and Build conditions shows there is no change in traffic operations at the study are intersections associated with the build out of the project.

RECORD OF DECISION
AND
FINDINGS OF FACT

CROW RIVER HEIGHTS WEST FUTURE ADDITIONS EAW

RGU: City of Hanover

June 19, 2018

I. Final Action

The City of Hanover concluded the following on June 19, 2018:

1. The Environmental Assessment Worksheet, this "Record of Decision and Findings of Fact" document, and related documentation for the Crow River Heights West Future Additions were prepared in compliance with the procedures of the Minnesota Environmental Policy Act and Minn. Rules, Parts 4410.1000 to 4410.1700.

2. The Environmental Assessment Worksheet, this "Findings of Fact and Record of Decision" document, and related documentation for the project have satisfactorily addressed all of the issues for which existing information could have been reasonably obtained.

3. The project does not have the potential for significant environmental effects based upon the above findings and the evaluation of the following four criteria (per Minn. Rules, Parts 4410.1700 Subp. 7):
   - Type, extent, and reversibility of environmental effects.
   - Cumulative effects of related or anticipated future projects.
   - Extent to which the environmental effects are subject to mitigation by ongoing public regulatory authority.
   - Extent to which environmental effects can be anticipated and controlled as a result of other environmental studies undertaken by public agencies or the project proposer, or of environmental reviews previously prepared on similar projects.

4. The finding by the City that the EAW is adequate and no EIS is required provides no endorsement, approval or right to develop the proposal by the City and cannot be relied upon as an indication of such approval. This finding allows the proposer to have applications considered in the City's land development process, and for the City in this process, informed by the record of the EAW, to consider proposals for development.

Consequently, the City makes a Negative Declaration and does not require the development of an Environmental Impact Statement for the project.

II. Background

Pursuant to Minnesota Rule 4410.4500, the City of Hanover has prepared an Environmental Assessment Worksheet (EAW) for the proposed Crow River Heights West Future Additions development. The Record of Decision addresses the State of

Minnesota environmental review requirements as established in Minnesota Rules 4410.1700. Dennis Backes is the project proposer, and the City of Hanover is the Responsible Governmental Unit (RGU).

III. Findings of Fact and Conclusions

As to the need for an Environmental Impact Statement (EIS) on this project and based on the record in this matter, including the EAW which is incorporated herein by reference, the City of Hanover makes the followings Findings of Fact and Conclusions:

A. Project Description

The proposed project is the development of 159 single-family detached homes on 72 acres. The project is a revived development of a previously approved subdivision. In September 1999, the City of Hanover an EAW for West Crow River Heights Residential Development, for which a negative declaration for an EIS was subsequently approved. In 2000 a preliminary plat was approved and the developer completed 106 of the lots and graded most of the roads for the development before stopping construction in 2007. In 2018, a new developer (Backes Development, LLC) is proposing to complete the project with some changes to the previously approved plans. The plan is altered due to new wetland setback and buffer ordinances and with the replacement of 77 previously approved detached townhomes with single-family lots. The project would be developed as a Planned Unit Development (PUD) allowing an average lot size of 11,968 square feet. Several small wetland basins will be filled and mitigated by using on-site wetland replacement. Due to the lapse of time from the initial EAW the city ordered a new EAW for the uncompleted portion of the development, with the exception of 30 lots which were allowed to be developed in 2017. Disturbance of the site will be for grading the roads, installation of municipal water and sanitary sewer infrastructure, installation of stormwater infrastructure, and completion of pads for building sites. The project is anticipated to be developed in phases consisting of approximately 30 lots per phase for a total of 5 to 6 phases. With the current demand for single-family homes, each phase could begin every year for a completion date of within 5 to 6 years.

B. Project History

- The project was subject to a mandatory EAW per Minnesota Rule 4410.4300, Subpart 19B.

- The EAW was distributed to the EQB and to the EQB mailing list on April 23, 2018.

- Public notices containing information about the availability of the EAW for public review was provided to the Wright County Journal for publication in the April 26, 2018 edition.

- Hard copies of the EAW were provided for public review at Hanover City Hall, the Environmental Conservation Library, and Great River Regional Library. An electronic copy was provided on the City of Hanover's website.

- A notice was published in April 30, 2018 EQB Monitor. The public comment period ended May 30, 2018. Comments were received from the State Historic Preservation Office, the Minnesota Pollution Control Agency, and Wright County. Copies of these comment letters are hereby incorporated for reference and included in Exhibit A.

- Public comments were received verbally at the Hanover Planning Commission meeting on May 23, 2018.

- Written public comments were received and are hereby incorporated for reference and included in Exhibit B.

C. Criteria for Determining the Potential for Significant Environmental Effects

In deciding whether a project has the potential for significant environmental effects and whether an Environmental Impact Statement (EIS) is needed, the Minnesota Environmental Quality Board rules (4410.1700 Subparts 6 and 7) require the RGU to compare the impacts that may be reasonably expected to occur from the project with the four criteria by which potential impacts must be evaluated. With respect to each of these factors, the City of Hanover finds the following:

1. Type, extent and reversibility of environmental effects (Minnesota Rule 4410.1700 Subpart 7A):

a. The type of environmental impacts and mitigation efforts anticipated as part of this project include:

Soil Disturbance – The project will involve soil disturbance. A National Pollutant Discharge Elimination System (NPDES) permit will be required and erosion control best management practices will need to be utilized. The site has been previously graded with development activities ceasing in the mid-2000's.

Water Quality – The site is within one mile of the Crow River, which is listed as an impaired water. The draft MPCA 2016 303(d) impaired waters list does propose delisting this reach for its dissolved oxygen

impairment but the document has not yet been approved by the U.S. Environmental Protection Agency. Under post-development conditions, no stormwater runoff is directed to Lake Wilhelm and no other direct impacts to Lake Wilhelm are being proposed. A stormwater management plan has been prepared for this development and describes the collection and treatment of the stormwater runoff. Requirements for stormwater treatment are based upon the Watershed District (with the City of Hanover as the LGU), and the provisions of the Federal Clean Water Act (with the MPCA as the LGU) through the National Pollutant Discharge Elimination System (NPDES) permit.

Wastewater – The project will increase sanitary sewer flows, but the existing wastewater system is capable of handling the increased sanitary flow.

Water Supply – The project will increase water usage, but the existing water supply and distribution system is adequate in managing the increased water demand.

Transportation – A Traffic Impact Study was completed for the development which considered both a 2025 build-out design year and the 2040 long range planning horizon under both a Build and No-Build scenario. The study noted that by 2025 the intersection of Labeaux Avenue NE and River Road West will experience long vehicle queues in the southbound direction in the AM and in the northbound direction in the PM due to the large directional peaking characteristic of home to work drivers. Improvements to Labeaux Ave NE between Beebe Lake Road and the south side of the Crow River are suggested to manage No-Build traffic conditions after the year 2025. Under both the 2025 and the 2040 Build and No-Build scenarios, there is no change in traffic operations at the study area intersections associated with the build-out of this project.

b. The extent and reversibility of environmental impacts for the proposed project are consistent with those of a typical residential development project. Impacts will be minimized to the extent practical, with mitigation provided for those impacts which cannot be avoided to resources such as traffic, storm water runoff, etc.

2. **Cumulative potential effects (Minnesota Rule 4410.1700 Subpart 7B):** This is a completion of an existing neighborhood which was permitted in 2000 following the completion of an EAW. There are no reasonably foreseeable future projects to create cumulative impacts, with the exception of increased traffic on CR 19 from background growth in the entire area which was modeled in the traffic impact study.

3. **Extent to which the environmental effects are subject to mitigation by ongoing public regulatory authority (Minnesota Rule 4410.1700 Subpart 7C):**

   a. The following permits or approvals will be required for this project.

Unit of government	Type of application	Status
US Corps of Engineers	Section 404 Wetland Impact	Obtain if needed
DNR Waters	Dewatering Permit	Obtain if needed
MPCA	NPDES Permit	To be obtained
MPCA	Sanitary Sewer Permit	To be obtained
MDH	Water Extension Permit	To be obtained
Wright SWCD-LGU	WCA Permit	To be obtained
City of Hanover	Plat Approval	To be obtained
City of Hanover	Rezoning	To be obtained
City of Hanover	Planned Unit Development	To be obtained
City of Hanover	Building Permit	To be obtained

   b. The City of Hanover finds that the potential impacts identified as part of the proposed Crow River Heights West Future Additions project can be addressed through the regulatory agencies as part of the permitting process. As a result, additional analysis of these impacts is not required.

4. **Extent to which environmental effects can be anticipated and controlled as a result of other available environmental studies undertaken by public agencies or the project proposer (Minnesota Rule 4410.1700 Subpart 7D):**

   The City finds:

   1. The proposed project is reasonably similar to other residential development projects in the area.
   2. A previous EAW for this same property identified similar environmental impacts.
   3. In consideration of the results of this EAW and permitting processes for similar projects, the City anticipates the environmental effects of the project can be adequately anticipated and mitigated.

D. Conclusions

The Crow River Heights West Future Additions EAW and comments have generated information adequate to determine that the proposed project does not have the potential for significant environmental effects. Identified effects can be addressed through permitting and the project will comply with all city, county, state and federal review agency requirements.

Based on the criteria established in Minnesota Rule 4410.1700, the project does not have the potential for significant environmental effects. Therefore, an Environmental Impact Statement is not required for the Crow River Heights West Future Additions project.

IV. Substantive Agency Comments Received and Responses to these Comments

The City received written comments during the public comment period from the following agencies:

Minnesota State Historic Preservation Office, May 23, 2018
Minnesota Pollution Control Agency, May 30, 2018
Wright County, May 23, 2018

The following responses to comments are arranged according to commenting agency. Responses are confined mostly to substantive issues addressing the accuracy and completeness of the material contained in the EAW, and potential impacts that may warrant further investigation. Recommendations and statements not relating to these issues have been duly noted for the record, but are not necessarily addressed in the responses. The complete comment letters are available for review in Exhibit A.

1. Minnesota State Historic Preservation Office

Comment: Based on our review of the project information, we conclude that there are no properties listed in the National or State Registers of Historic Places, and no known or suspected archaeological properties in the area that will be affected by this project.

Response: Comment noted.

2. Minnesota Pollution Control Agency

Comment: Permits and Approvals (Item 8)
This section indicates that a Clean Water Act (CWA) Section 404 Permit from the U.S. Army Corps of Engineers (USACE) for project related wetland impacts may be necessary. Please be aware that if a USACE Section 404 Individual Permit is required for any project activity, then an MPCA CWA Section 401 Water Quality

Certification, with degradation assessment, or waiver must also be obtained as part of the permitting process. The Section 401 Water Quality Certification ensures that the activity will comply with the state water quality standards. Any conditions required within the MPCA 401 Certificate are then incorporated into the USACE 404 Permit. You can find additional information about the MPCA's 401 Certification process at http s://www.pc a.state.mn.us/ water/ clean-water -act -section-401-water quality -certifications. For further information about the 401 Water Quality Certification process, please contact Jim Brist at 651-757-2245 or Bill Wilde at 651-757-2825.

Response: A letter dated May 9, 2018, the US Army Corps of Engineers (COE) had approved a Jurisdictional Determination (JD) for the onsite wetlands. The COE determined that the onsite wetlands are not waters of the United States and are not subject to COE jurisdiction. Therefore, no section 404 permit is required.

Comment: Water Resources (Item 11)
Stormwater

- The EAW and accompanying Stormwater Pollution Prevention Plan (SWPPP) for the project states that the proposed development will occur on 72 acres and that the site will discharge to the Crow River which is listed as impaired. It should be noted that if a total of 50 acres will be disturbed and any portion of the site discharges to a surface water within 1 mile that is listed as impaired, the SWPPP must be submitted to the MPCA for review prior to obtaining an National Pollutant Discharge Elimination System/State Disposal System (NPDES/SDS) Construction Stormwater Permit **(CSW** Permit).
- The Project proposes construction of wet sedimentation basins to treat stormwater runoff from the development. It should be noted that the CSW Permit requires that the required water quality volume is retained on the site and not discharged to area surface waters through use of infiltration, unless prohibited due to a high seasonal water table or bedrock located within 3 feet of the bottom of the treatment area. Soil borings are needed in the location of the stormwater treatment area to determine whether infiltration is prohibited. The EAW does not identify whether infiltration is prohibited or identify another method of retaining the stormwater volume on the site (i.e. volume reduction method). Wet sediment basins are not considered a volume reduction method and may be used only when determined that infiltration is prohibited. It should also be noted that the existing wetlands may not be utilized for stormwater treatment areas unless there has been mitigation for them.
- The EAW states that soils at the site will be "re-vegetated " within 14 days of completing the construction activities. This statement needs to conform to the SWPPP, which states that disturbed soils must be stabilized within 7 days due to the Crow River being listed as impaired.
- The EAW does not describe how the numerous wetlands at the site will be

protected from sedimentation during construction. The CSW Permit requires that redundant (double) sediment controls are installed down gradient of the construction if the existing 50 feet of natural buffer is disturbed at these surface waters. The existing wetland buffers may not be encroached unless necessary to complete the construction. Questions regarding CSW Permit requirements should be directed to Roberta Getman at 507-206-2629.

Surface Waters

- The Project falls within a mile of the Crow River. Although the draft MPCA 2016 303(d) impaired waters list does propose delisting this reach for its dissolved oxygen impairment, the document has not yet been approved by the U.S. Environmental Protection Agency and there is no current anticipated timeline for that approval to occur. Thus, the water is still impaired and should be identified in this section as an impaired water within 1 mile of the Project site.

- The statement that "The surrounding surface waters, Lake Wilhelm and the Crow River backwater basin will be protected by an erosion control plan and an NPDES permit" does not sufficiently describe the likely impacts of the proposed Project to the surrounding waters.

  The NPDES permit, if followed strictly during construction, will help to protect the surrounding waters from water and wind erosion related impacts. However, even in the rare instance where all NPDES requirements are strictly followed, large, out of the ordinary storm events can overwhelm erosion control best management practices (BMPs) and cause them to fail, and exposed soils can still impact surrounding waters.

  In addition, a 16.6 acre increase in impervious surface will impact Lake Wilhelm and other surface waters in negative ways. Data on the effects of impervious surface increase is plentiful and clear that even when the increase of impervious surface is mitigated for to some extent by the implementation of stormwater BMPs, there will still be impacts to surrounding waters. These impacts can occur directly by increasing runoff to those waters, or in less obvious ways by reducing groundwater infiltration, removing habitat for organisms that contribute to watershed health, increasing the introduction of contaminants to groundwater (which is hydrologically connected to surface water) or surface water runoff, and removing vertical storage (trees). Human activities, once the housing development is completed and functioning, will add additional impacts (contaminants of emerging concern, improperly disposed of solid waste, phosphorus from fertilizers or fire pits, chlorides for roads and sidewalks, alteration and removal of native vegetation that is replaced by
  grass lawns, and numerous other ways). In short, to say that the lake will be "protected by an NPDES permit" does not address the reality of development

and its potential impacts. Data from numerous sources, including the National Aeronautics and Space Administration (NASA) indicate that impervious surface percentages of between 15%-25% within a drainage area of a water body cause degradation of water quality. Lake Wilhelm appears to be within that range.

Currently, although the lake itself is not designated as "impaired," this is because there is currently insufficient data to make an impairment designation; but not because the lake does not show signs of being in poor condition. Data from 2010, for example, indicates total phosphorus levels of as high as 239 micrograms per liter, well exceeding the standard of 40 micrograms per liter. For questions regarding surface water issues, please contact Scott Lucas at 218-316-3874.

Low Impact Design
The MPCA advocates the use of Low Impact Design (LID) practices to aid in the minimization of stormwater impacts. LID is a stormwater management approach and site-design technique that emphasizes water infiltration, values water as a resource, and promotes the use of natural systems to treat water runoff. Examples include:

- Special ditches, arranged in a series, that soak up more water
- Vegetated filter strips at the edges of paved surfaces
- Trees or swales between rows of cars
- Residential or commercial rain gardens designed to capture and soak in stormwater
- Porous pavers, concrete and asphalt for sidewalks and parking lots
- Narrower streets
- Rain barrels and cisterns
- Green roofs

LID concepts may be found in the *State of Minnesota Stormwater Manual* dated November 2005 located on the MPCA website at: http://www.pca.state.mn.us/water/stormwater/stormwater-manual.html.

In addition, the MPCA LID webpage provides a description and examples of LID features such as permeable pavement, rain gardens, and green roofs. Links to other resources on LID are available as well. The web site is located at: http s:/ / www .pca.state.mn.us/ water/ stormwater-management-low impact -developmen-tand -green-infrastructure.

Response: The EAW states that the development occurs on 72 acres. However, the total project will be completed in 5 – 6 phases. Each phase will consist of approximately 30 – 35 lots and will be about 15-20 acres in size and will be 1 to 2

years apart. Each phase will be required to obtain an NPDES permit. For the first phase, the SWPPP will be submitted to the MPCA for review and approval.

Attachment 6 of the EAW is the Geotechnical Exploration Report for the site and includes soil boring logs. The soils identified are gray silty clay; gray brown silty clay; gray silty sandy clay and brown silty clay with sand. All types are classified as CL (fine grained inorganic clays). This type of soil prohibits infiltration. Therefore, filtration trenches will be used to provide water quality treatment. All stormwater is treated by sedimentation/detention ponds with filtration trenches or by grassed buffer strips in backyard areas prior to discharging to adjacent wetlands.

The final SWPPP will be noted that soils must be stabilized within 7 days due to the Crow River being listed as an impaired water.

The final SWPPP will note redundant (two rows) of silt fencing be placed around wetlands which are to be protected and preserved.

The final SWPPP will note the Crow River as impaired until it is officially removed from the impaired waters list.

As mentioned in the comments, there does exist the possibility for potential impacts to Lake Wilhelm and the Crow River backwater area. The preparation, initiation and implementation of the SWPPP will reduce impacts as much as possible to the limits of the permit requirements. Other methods mentioned, like Low Impact Designs (LID), are feasible and can be utilized in unique areas and private residences.

Other surrounding surface waters include Lake Wilhelm and a backwater area of the Crow River. Lake Wilhelm is located to the north and is bounded by County Road 34 (Beebe Lake Rd). Under existing conditions, there is no direct stormwater runoff to Lake Wilhelm. The backwater area of the Crow River is located approximately 0.9 miles to the east along CR 34. Under existing conditions, the stormwater runoff from the current residential area ultimately drains to the backwater area through a series of treatment ponds, grassed swales and the CR 34 road ditch.

A Stormwater Management Plan (SMP) has been prepared for this development and describes the collection and treatment of the stormwater runoff. Requirements for stormwater treatment are based upon the Watershed District (in this case the City of Hanover is the local governmental unit, LGU) and the provisions of the Federal Clean Water Act (the MN Pollution Control Agency, MPCA, is the LGU) through the National Pollutant Discharge Elimination System (NPDES) permit. The requirements are:

Rate Control – Post-development discharge rates shall equal or not exceed the pre-development discharge rates. The City has stringent standards for discharge rates, requiring the post-development rates not exceed 0.1 cubic feet per second per acre of drainage area for the 1, 10, 100-year storm events and the 100-10 day snowmelt event.

Volume Control – The NPDES permit requires 1.0 inch of runoff from new impervious surfaces be retained on site and not discharged to a surface water. This is typically accomplished by infiltration. However, the clay soils within this development restricts drainage through the soil and will not meet the prescribed time of 48 hours. Therefore, infiltration is not feasible. An option to infiltration is filtration trenches which is what this development utilizes. Filtration trenches consists of a trench filled with a Bioretention Soil Mix 'C', per the MN Stormwater Manual, and draintile. The soil mix contains sand, fines and organic matter which filter the runoff promoting the removal of phosphorus, copper, lead, zinc and other chemicals.

Water Quality – Both the City and the NPDES have requirements to reduce total suspended solids (TSS) by 85% and the total phosphorus (TP) by 60%. The P8 Urban Catchment Model is used to calculate the removal efficiency of the proposed treatment areas.

Stormwater Ponds – stormwater ponds are required to have a maximum 5:1 side slopes from the normal water level (NWL) to the high water level (HWL); a 10:1 bench below the NWL and provide an emergency overflow (EOF).

The grading plan along with the SMP shows that under the post-developed conditions, no stormwater runoff is directed towards the north. Therefore, there is no additional runoff directed towards Lake Wilhelm. All of the runoff is directed to onsite ponding areas where it is treated and released per the rate control requirements. The outfall of this development is an existing pond denoted as pond 5. Pond 5 discharges to the City's current storm sewer system where it flows through a series of additional ponding areas, grassed swales and the CR 34 road ditch, where it ultimately discharges to the backwater area of the Crow River.

The results of the SMP show that the stringent runoff rate control is met, with a maximum discharge rate of 6.8 cfs during a 100 year storm event for the 87 acres of drainage area. Volume control is met utilizing filtration trenches. Water quality is met by reducing TSS by 87% and TP by 63%. All new ponding areas and one existing ponding areas are to be graded with required side slopes, aquatic benches and emergency overflows.

Impacts to Lake Wilhelm will be minimal if not negligible since there will be no direct runoff to the lake. No draining, filling, permanent inundation, dredging, diking, stream diversion, impoundment, aquatic plant removal or riparian alteration is proposed at or near the lake. Grading, stormwater runoff collection and treatment, as proposed by this development, will prevent direct runoff and minimize environmental effects to the lake. Although this development does not have direct access to Lake Wilhelm, it is anticipated that a small number of people will utilize the lake increasing watercraft usage.

Impacts to the backwater of the Crow River will be minimized as much as possible through the treatment requirements required. In actuality, the discharge rate from the existing pond 5 for the most recent subdivision is 6.8 cfs equaling the maximum rate

for the future additions. Therefore, there will be no increase in the discharge rates. The ponding system in this development accommodates the runoff to meet the current allowable discharge rate.

The MPCA perceives that upon completion of the development human activities may impact downstream waters by improperly disposing of solid waste; phosphorus from fertilizer and fire pits; chlorides for roads and sidewalks; grass lawns and numerous other ways. The City, through policies, ordinances and road maintenance practices, should consider ways to minimize these activities.

The MPCA also advocates Low Impact Design (LID) practices. While the development would certainly consider removing curb and gutter in lieu of vegetated filter strips at the edges of paved surfaces and narrower streets, the City has ordinances and subdivision standards which the development is required to build to. The City could also promote rain barrels, green roofs, etc. for residences through city wide programs.

Comment: Noise (Item 17)

Construction equipment should be fitted with the appropriate mufflers during all phases of use. For noise related questions, please contact Christine Steinwand at 651-757-2327.

Response: Comment noted.

3. Wright County

Comment: The EAW states

a. "While the project does not result in a change in operations, it suggested that Wright County give consideration to widening CSAH 19 from existing 3 lane to a 4-lane after 2025 to accommodate anticipate growth in back ground traffic"
b. "Widen the bridge over the Crow River (to add a lane)?"

We would suggest wording such as, "accommodate anticipated growth referencing Wright County's current Long Range Transportation Plan" verses specifics on number of lanes or suggested geometrics of intersections. Wright Co is currently in the process of updating the Long Range Transportation Plan and it anticipated completion is end of 2018 or early 2019.

Response: The City concurs with Wright County's concern about providing specific recommendations and recognizes that consideration of actual improvements and their timing is subject to the Wright County Long Range Transportation Plan along with additional analysis and design. The recommendations provided are typical of those included within a traffic impact study prepared with a development project, and are meant to provide a suggestion of what may be needed.

V. Comments from the Public

Comments from the public were received both in writing and verbally at the Planning Commission meeting held on May 23, 2018. Written comments are attached in Exhibit B. The comments received can generally be summarized as follows:

Comment: Wetlands cross property lines onto neighboring properties. What about additional drainage created by the development? How can we be sure these won't back up and flood my property?

Response: The wetlands have been delineated which provides information on the ordinary high-water level for each of them. A surface water management system will be designed and constructed in the development which treats stormwater and addresses runoff and volume control.

Comment: Wetland impacts and mitigation hasn't been approved by the Wright County Soil and Water Conservation District (WCSWCD).

Response: The EAW discusses proposed mitigation, but it is through the permitting process that actual mitigation is considered and permitted, sometimes with changes to what is included in the EAW. This allows for additional design and consideration of impacts to occur prior to the actual permitting. In areas for which wetlands impacts and mitigation are proposed to occur, no construction would be allowed until all permits have been secured.

Comment: Traffic, particularly along the CR 19 corridor, is already bad and will become worse.

Response: Traffic on the CR 19 corridor is increasing, and the traffic impact study included in the EAW demonstrates that as well. However, the traffic is predominantly the result of general development and population growth in the area and a negligible amount is directly related to this proposed development. Improvements to CR 19 should continue to be discussed with Wright County.

Comment: A transition zone should be put into place to separate my property/other neighborhoods from this development.

Response: The City's ordinances do require transitions (or buffers) between certain types of developments. However, these transitions or buffers are typically provided between a residential land use and a use such as mining or industrial that has potential to impact the use of the residential properties. Buffers are not required in the city's ordinances between residential properties.

C:\Users\cnash\Dropbox\Hanover\Developments\Crow River Heights West\EAW\Findings of Fact CRH West EAW.docx

Exhibit A

Agency Comment Letters

DEPARTMENT OF ADMINISTRATION
STATE HISTORIC PRESERVATION OFFICE

May 23, 2018

Ms. Cindy Nash
Collaborative Planning, LLC
PO Box 251
Medina, MN 55340

RE: EAW - Crow River Heights West Future Additions
120 R24 S34 NE
Hanover, Wright County
SHPO Number: 2018-1818

Dear Ms. Nash:

Thank you for providing this office with a copy of the Environmental Assessment Worksheet (EAW) for the above-referenced project.

Based on our review of the project information, we conclude that there are no properties listed in the National or State Registers of Historic Places, and no known or suspected archaeological properties in the area that will be affected by this project.

Please note that this comment letter does not address the requirements of Section 106 of the National Historic Preservation Act of 1966 and 36 CFR § 800. If this project is considered for federal financial assistance, or requires a federal permit or license, then review and consultation with our office will need to be initiated by the lead federal agency. Be advised that comments and recommendations provided by our office for this state-level review may differ from findings and determinations made by the federal agency as part of review and consultation under Section 106.

Please contact our Environmental Review Program at (651) 201-3285 if you have any questions regarding our review of this project.

Sincerely,

Sarah J. Beimers

Sarah J. Beimers
Environmental Review Program Manager

MINNESOTA POLLUTION CONTROL AGENCY

520 Lafayette Road North | St. Paul, Minnesota 55155-4194 | 651-296-6300

800-657-3864 | Use your preferred relay service | info.pca@state.mn.us | Equal Opportunity Employer

May 30, 2018

Cindy Nash
City Planner
Collaborative Planning, LLC
11250 5th Street NE
Hanover, MN 55341

Re: Crow River Heights West Future Additions Environmental Assessment Worksheet

Dear Cindy Nash:

Thank you for the opportunity to review and comment on the Environmental Assessment Worksheet (EAW) for the Crow River Heights West Future Additions project (Project) in the city of Hanover, Wright County, Minnesota. The Project consists of a residential development. Regarding matters for which the Minnesota Pollution Control Agency (MPCA) has regulatory responsibility or other interests, the MPCA staff has the following comments for your consideration.

Permits and Approvals (Item 8)

This section indicates that a Clean Water Act (CWA) Section 404 Permit from the U.S. Army Corps of Engineers (USACE) for project related wetland impacts may be necessary. Please be aware that if a USACE Section 404 Individual Permit is required for any project activity, then an MPCA CWA Section 401 Water Quality Certification, with degredation assessment, or waiver must also be obtained as part of the permitting process. The Section 401 Water Quality Certification ensures that the activity will comply with the state water quality standards. Any conditions required within the MPCA 401 Certificate are then incorporated into the USACE 404 Permit. You can find additional information about the MPCA's 401 Certification process at https://www.pca.state.mn.us/water/clean-water-act-section-401-water-quality-certifications. For further information about the 401 Water Quality Certification process, please contact Jim Brist at 651-757-2245 or Bill Wilde at 651-757-2825.

Water Resources (Item 11)

Stormwater

- The EAW and accompanying Stormwater Pollution Prevention Plan (SWPPP) for the project states that the proposed development will occur on 72 acres and that the site will discharge to the Crow River which is listed as impaired. It should be noted that if a total of 50 acres will be disturbed and any portion of the site discharges to a surface water within 1 mile that is listed as impaired, the SWPPP must be submitted to the MPCA for review prior to obtaining an National Pollutant Discharge Elimination System/State Disposal System (NPDES/SDS) Construction Stormwater Permit (CSW Permit).
- The Project proposes construction of wet sedimentation basins to treat stormwater runoff from the development. It should be noted that the CSW Permit requires that the required water quality volume is retained on the site and not discharged to area surface waters through use of infiltration, unless prohibited due to a high seasonal water table or bedrock located within 3 feet of the bottom of the treatment area. Soil borings are needed in the location of the stormwater treatment area to determine whether infiltration is prohibited. The EAW does not identify whether infiltration is prohibited or identify another method of retaining the stormwater volume on the site (i.e. volume reduction method). Wet sediment basins are not considered a volume reduction method and may be used only when determined that infiltration is prohibited. It should also be noted that the existing wetlands may not be utilized for stormwater treatment areas unless there has been mitigation for them.

- The EAW states that soils at the site will be "re-vegetated" within 14 days of completing the construction activities. This statement needs to conform to the SWPPP, which states that disturbed soils must be stabilized within 7 days due to the Crow River being listed as impaired.
- The EAW does not describe how the numerous wetlands at the site will be protected from sedimentation during construction. The CSW Permit requires that redundant (double) sediment controls are installed down gradient of the construction if the existing 50 feet of natural buffer is disturbed at these surface waters. The existing wetland buffers may not be encroached unless necessary to complete the construction. Questions regarding CSW Permit requirements should be directed to Roberta Getman at 507-206-2629.

Surface Waters

- The Project falls within a mile of the Crow River. Although the draft MPCA 2016 303(d) impaired waters list does propose delisting this reach for its dissolved oxygen impairment, the document has not yet been approved by the U.S. Environmental Protection Agency and there is no current anticipated timeline for that approval to occur. Thus, the water is still impaired and should be identified in this section as an impaired water within 1 mile of the Project site.

- The statement that "The surrounding surface waters, Lake Wilhelm and the Crow River backwater basin will be protected by an erosion control plan and an NPDES permit" does not sufficiently describe the likely impacts of the proposed Project to the surrounding waters.

  The NPDES permit, if followed strictly during construction, will help to protect the surrounding waters from water and wind erosion related impacts. However, even in the rare instance where all NPDES requirements are strictly followed, large, out of the ordinary storm events can overwhelm erosion control best management practices (BMPs) and cause them to fail, and exposed soils can still impact surrounding waters.

  In addition, a 16.6 acre increase in impervious surface will impact Lake Wilhelm and other surface waters in negative ways. Data on the effects of impervious surface increase is plentiful and clear that even when the increase of impervious surface is mitigated for to some extent by the implementation of stormwater BMPs, there will still be impacts to surrounding waters. These impacts can occur directly by increasing runoff to those waters, or in less obvious ways by reducing groundwater infiltration, removing habitat for organisms that contribute to watershed health, increasing the introduction of contaminants to groundwater (which is hydrologically connected to surface water) or surface water runoff, and removing vertical storage (trees). Human activities, once the housing development is completed and functioning, will add additional impacts (contaminants of emerging concern, improperly disposed of solid waste, phosphorus from fertilizers or fire pits, chlorides for roads and sidewalks, alteration and removal of native vegetation that is replaced by grass lawns, and numerous other ways). In short, to say that the lake will be "protected by an NPDES permit" does not address the reality of development and its potential impacts. Data from numerous sources, including the National Aeronautics and Space Administration (NASA) indicate that impervious surface percentages of between 15%-25% within a drainage area of a water body cause degradation of water quality. Lake Wilhelm appears to be within that range.

  Currently, although the lake itself is not designated as "impaired," this is because there is currently insufficient data to make an impairment designation; but not because the lake does not show signs of being in poor condition. Data from 2010, for example, indicates total phosphorus levels of as high as 239 micrograms per liter, well exceeding the standard of 40 micrograms per liter. For questions regarding surface water issues, please contact Scott Lucas at 218-316-3874.

Low Impact Design
The MPCA advocates the use of Low Impact Design (LID) practices to aid in the minimization of stormwater impacts. LID is a stormwater management approach and site-design technique that emphasizes water infiltration, values water as a resource, and promotes the use of natural systems to treat water runoff. Examples include:

- Special ditches, arranged in a series, that soak up more water
- Vegetated filter strips at the edges of paved surfaces
- Trees or swales between rows of cars
- Residential or commercial rain gardens designed to capture and soak in stormwater
- Porous pavers, concrete and asphalt for sidewalks and parking lots
- Narrower streets
- Rain barrels and cisterns
- Green roofs

LID concepts may be found in the *State of Minnesota Stormwater Manual* dated November 2005 located on the MPCA website at: http://www.pca.state.mn.us/water/stormwater/stormwater-manual.html.

In addition, the MPCA LID webpage provides a description and examples of LID features such as permeable pavement, rain gardens, and green roofs. Links to other resources on LID are available as well. The web site is located at: https://www.pca.state.mn.us/water/stormwater-management-low-impact-development-and-green-infrastructure.

Noise (Item 17)
Construction equipment should be fitted with the appropriate mufflers during all phases of use.
For noise related questions, please contact Christine Steinwand at 651-757-2327.

We appreciate the opportunity to review this Project. Please provide your specific responses to our comments and notice of decision on the need for an Environmental Impact Statement. Please be aware that this letter does not constitute approval by the MPCA of any or all elements of the Project for the purpose of pending or future permit action(s) by the MPCA. Ultimately, it is the responsibility of the Project proposer to secure any required permits and to comply with any requisite permit conditions. If you have any questions concerning our review of this EAW, please contact me by email at Karen.kromar@state.mn.us or by telephone at 651-757-2508.

Sincerely,

Karen Kromar

Karen Kromar
Project Manager
Environmental Review Unit
Resource Management and Assistance Division

KK:bt

cc: Dan Card, MPCA, St. Paul
Bill Wilde, MPCA, St. Paul
Roberta Getman, MPCA, Rochester
Scott Lucas, MPCA, Brainerd
Christine Steinwand, MPCA, St. Paul
Teresa McDill, MPCA, St. Paul

Cindy Nash

From: Sara C. Buermann <Sara.Buermann@co.wright.mn.us>
Sent: Monday, May 14, 2018 2:03 PM
To: Cindy Nash
Subject: RE: Crow River Heights West Future Additions EAW - City of Hanover

Hi Cindy,
Wright County offers the following comments, the EAW states

a. "While the project does not result in a change in operations, it suggested that Wright County give consideration to widening CSAH 19 from existing 3 lane to a 4-lane after 2025 to accommodate anticipate growth in back ground traffic"
b. "Widen the bridge over the Crow River (to add a lane)?"

We would suggest wording such as, "accommodate anticipated growth referencing Wright County's current Long Range Transportation Plan" verses specifics on number of lanes or suggested geometrics of intersections. Wright Co is currently in the process of updating the Long Range Transportation Plan and it anticipated completion is end of 2018 or early 2019.

Thank you!

Sara Buermann, P.E. • Traffic Engineer • (763) 682-7391

From: Cindy Nash [mailto:cnash@collaborative-planning.com]
Sent: Monday, April 23, 2018 1:19 PM
To: Amanda Gronhovd (amanda.gronhovd@state.mn.us) <amanda.gronhovd@state.mn.us>; Annie Felix-Gerth (annie.felix-gerth@state.mn.us) <annie.felix-gerth@state.mn.us>; Becky Balk (becky.balk@state.mn.us) <becky.balk@state.mn.us>; Dan Card (dan.card@state.mn.us) <dan.card@state.mn.us>; Debra Moynihan (debra.moynihan@state.mn.us) <debra.moynihan@state.mn.us>; Department of Health - Review (health.review@state.mn.us) <health.review@state.mn.us>; Environmental Conservation Library (govdoc@hclib.org) <govdoc@hclib.org>; Grean, Andrew - NRCS-CD, Buffalo, MN <Andrew.Grean@mn.nacdnet.net>; Great River Regional Library (stcloudlibrary@grrl.lib.mn.us) <stcloudlibrary@grrl.lib.mn.us>; Kenneth Westlake (westlake.kenneth@epa.gov) <westlake.kenneth@epa.gov>; Lee Kelly <Lee.Kelly@co.wright.mn.us>; Melissa Cerda (melissa.cerda@state.mn.us) <melissa.cerda@state.mn.us>; Peter Fasbender (peter_fasbender@fws.gov) <peter_fasbender@fws.gov>; Randall Doneen (randall.doneen@state.mn.us) <randall.doneen@state.mn.us>; Raymond Kirsch (raymond.kirsch@state.mn.us) <raymond.kirsch@state.mn.us>; Sara C. Buermann <Sara.Buermann@co.wright.mn.us>; US ACOE Review (mvp-reg-inquiry@usace.army.mil) <mvp-reg-inquiry@usace.army.mil>
Subject: Crow River Heights West Future Additions EAW - City of Hanover

Members of the Environmental Review Distribution List:

The City of Hanover is providing the Crow River Heights West Future Additions EAW for your review. The EAW is available at the following link: https://www.dropbox.com/s/c70oivf0sa78zhh/CRH%20EAW.pdf?dl=0 . This project is a proposed development of a 72-acre site located south of Country Road 34 (Beebe Lake Road) in the City of Hanover, Wright and Hennepin County. The project is a residential development, which will include the construction of 159 single-family homes, roads, public utilities, and wetland mitigation.

The notice for the EAW will be published in the EQB Monitor on April 30, 2018. The 30-day review period begins on April 30, 2018 and ends on May 30, 2018. All comments should be directed to Cindy Nash at Collaborative Planning, LLC, preferably via email at cnash@collaborative-planning.com .

If you have any questions, please contact me at 763-473-0569.

Cindy Nash, AICP, EDFP
Collaborative Planning, LLC

Direct (763)473-0569
Cell (612)702-3845

PO Box 251, Medina, MN 55340

NOTICE: This E-mail (including attachments) is covered by the Electronic Communications Privacy Act, 18 U.S.C. 2510-2521. This E-mail may be confidential and may be legally privileged. If you are not the intended recipient, you are hereby notified that any retention, dissemination, distribution, or copying of this communication is strictly prohibited. Please reply back to the sender that you have received this message in error, then delete it. Thank you.

Exhibit B

Public Comment Letters

May 20, 2018

Ms. Cindy Nash, City Planner
Mr. Brian Hagen, City Administrator
City of Hanover
11250 5th St. NE
Hanover, MN 55341-0278

Re: Crow River Heights West Future Additions

Members of the Planning Commission;

We would like to comment for the May 23, 2018 Public Hearing record on the Backes Companies application regarding the Environmental Assessment Worksheet (EAW), Planned Unit Development (PUD), and Preliminary Plat review.

The platted area abuts our property located at 538 Jandel Ave NE, Hanover (Whitetail Preserve). We attach a photo with our lot outlined in blue and the Crow River Heights West area to the east.

In this phase, our area of interest is Outlot B, Wetland 11 of 41,815 sf. This wetland does not physically stop at the development lot lines, rather the actual wetland extends in to our lot. This wetland has seasonal flooding with high water that flows and extends to wetland areas along and in to our east lot line. This extended flow creates seasonal flooding. Per documents, it appears this Outlot B, Wetland 11 is planned to be unmitigated. However, as mentioned in the Wetland Delineation Report page 111, "the wetland has expanded since the time of the previous delineation into the adjacent graded area".

Our concern is knowing if no mitigation will be maintained, or if any mitigation and/or alterations are contemplated that affect this wetland and what protections will be in place during this phase, during home construction, and during homeowner lot work regarding landscaping or water management they may do.

As this Wetland 11 physically extends in to our lot, our interest and expectation is to not create any additional seasonal or non-seasonal high water to our property related to this development – whether through grading, drainage, water runoff, during site work, home construction, and/or homeowner landscaping and water management. This considers Chapter 20 - Zoning Ordinance and Chapter 30 - Subdivision Ordinance and/or other Chapters that may apply. If such conditions were to occur, we would expect mitigation be undertaken by the developer and/or the appropriate Crow River Heights West homeowner(s).

Thank you.
Sincerely,

Robert S. Clyne/Shannon Chau
CLYNE-CHAU LIVING TRUST
538 JANDEL AVE NE
HANOVER MN 55341-4059

MAY 21 2018

May 22, 2018

To: The Hanover Planning Commission,

I have lived at 579 Jandel Ave NE since September of 2000 and I have grave concerns about the current Crow River Heights West Third Addition preliminary plat proposed for the property directly north of mine.

When I moved to Hanover 18 years ago I purchased a large wooded lot along with all of my neighbors. I built my home here because I was looking for country living that provided a feeling of community but also allowed for some space and privacy. I was willing to give up the convenience of city water and sewer in order to enjoy the space and openness that the White Tail Preserve neighborhood provided.

The current plat proposes high density homes to be built directly adjacent to my property. I also noted in the EAW there is a plan to reduce the 9.1 acres of beautiful mature woods north of my property to less than half an acre.

I respectfully request the planning commission consider adding a requirement for a transition zone between my property and the proposed development area 15. This would be consistent with the transition areas included in the plat around the properties of my White Tail Preserve neighbors. I love living in Hanover and I love my house and my property. I pay my taxes and I am a good citizen and steward of this community. Please consider making this change to this proposed plan that would impact my property and lifestyle so negatively.

Regards,

Debra Krause

Debra L. Krause
579 Jandel Ave NE
Hanover, MN 55341
612.875.8707

CITY OF HANOVER
COUNTIES OF WRIGHT AND HENNEPIN
STATE OF MINNESOTA

A regular meeting of the City Council of the City of Hanover, Minnesota, was called to order by Mayor Chris Kauffman at 6:00 p.m. in the Council Chambers of the City Hall, in the City of Hanover, Minnesota, on the 19th day of June, 2018.

The following Council Members were present:

The following Council Members were absent:

A motion to adopt the following resolution was made by _____ and seconded by _____.

RESOLUTION NO 06-19-18-66

A RESOLUTION FINDING THAT THE PROPOSED CROW RIVER HEIGHTS WEST FUTURE ADDITIONS DOES NOT HAVE POTENTIAL FOR SIGNIFICANT ENVIRONMENTAL IMPACTS

WHEREAS, Backes Development, LLC ("Developer") is the fee owner of the real property described in the attached Exhibit A, and shall hereinafter be referred to in its entirety as the "Subject Property"; and

WHEREAS, the project required preparation of a mandatory Environmental Assessment Worksheet (EAW) pursuant to Minnesota Rules 4410.4300, Subpart 19; and

WHEREAS, the EAW was ordered by the City of Hanover City Council on February 6, 2018; and

WHEREAS, the EAW was published in the Environmental Quality Board (EQB) Monitor on April 30, 2018; and

WHEREAS, comments regarding the EAW were received during the 30-day comment period ending on May 30, 2018 and all comments received have been considered; and

WHEREAS, the EAW and the comments received during the comment period indicated the lack of potential for significant environmental effects resulting from the proposed project; and

WHEREAS, the EAW, in conjunction with comment responses and identified permitting and mitigation, will address environmental effects caused as a result of the project; and

WHEREAS, the City Council is required to base its decision on the need for an Environmental Impact Statement (EIS) and the proposed scope of an EIS on the information gathered during the EAW process and on the comments received on the EAW. Pursuant to Minnesota Rules 4410.1700, in deciding whether a project has the potential for significant environmental effects, the following factors shall be considered:

a. Type, extent and reversibility of environmental effects.

b. Cumulative potential effects of related or anticipated future projects.

c. The extent to which the environmental effects are subject to mitigation by ongoing public regulatory authority.

d. The extent to which environmental effects can be anticipated and controlled as a result of other environmental studies undertaken by public agencies or the project proposer, or of EISs previously prepared on similar projects.

NOW, THEREFORE, BE IT RESOLVED, the City Council of the City of Hanover now makes the following determinations:

1. The City Council makes a negative declaration on the need for an Environmental Impact Statement for the proposed project. Based on the foregoing information, the proposed Crow River Heights West Future Additions does not have potential for significant environmental effects and that preparation of an Environmental Impact Statement is not to be required based on a review of the submitted EAW and comments received.
2. None of the potential environmental effects identified in the EAW are deemed to be significant or to materially adversely affect the environment, particularly in light of the mitigative measures proposed or integrated into the project, the studies which have been undertaken, the Response to Comments incorporated herein, and the extent to which they are subject to ongoing regulatory authority through the zoning and subdivision ordinance requirements, a development agreement, the conditions attached to permits and plans, and public and private improvements which are either in place or will be constructed.
3. This document, all matters set forth above and incorporated herein, together with the EAW and the Findings of Fact and Record of Decision, shall constitute the Record of Decision.

Council members voting in favor:

Opposed or abstained:

Adopted by the City Council this 19th day of June, 2018.

APPROVED BY:

_____

Chris Kauffman, Mayor

ATTEST:

_____

Brian Hagen, City Administrator

Exhibit A

Those parts of the Northeast Quarter of the Northeast Quarter, the Northwest Quarter of the Northeast Quarter, and the Southeast Quarter of the Northeast Quarter of Section 34, Township 120 North, Range 24 West, Wright County, Minnesota, lying westerly, northerly, southwesterly, westerly, southwesterly and westerly of the following described line:

Commencing at the Northeast corner of said Northeast Quarter; thence westerly, on an assumed bearing of South 88 degrees 52 minutes 51 seconds West, along the north line of said Northeast Quarter, a distance of 1151.45 feet to the point of beginning of the line to be described; thence South 19 degrees 21 minutes 05 seconds East a distance of 346.94 feet; thence South 76 degree 05 minutes 34 seconds West a distance of 201.00 feet; thence southerly 25.96 feet along a non-tangential curve concave to the west, said curve has a radius of 217.00 feet, a central angle of 6 degrees 51 minutes 15 seconds, and a chord that bears South 13 degrees 00 minutes 43 seconds East; thence South 77 degrees 38 minutes 43 seconds West, not tangent to said curve a distance of 140.00 feet; thence North 13 degrees 42 minutes 04 seconds West a distance of 48.00 feet; thence North 36 degrees 05 minutes 51 seconds West a distance of 48.00 feet; thence South 89 degrees 10 minutes 28 seconds West a distance of 170.00 feet; thence South 33 degrees 52 minutes 00 seconds East a distance of 75.00 feet; thence South 50 degrees 45 minutes 56 seconds East a distance of 120.00 feet; thence South 42 degrees 40 minutes 13 seconds East a distance of 273.00 feet; thence South 22 degrees 37 minutes 55 seconds East a distance of 141.00 feet; thence South 3 degrees 41 minutes 31 seconds West a distance of 108.00 feet; thence South 20 degrees 00 minutes 33 seconds East a distance of 57.00 feet; thence North 66 degrees 36 minutes 33 seconds East a distance of 159.00 feet; thence North 88 degrees 41 minutes 47 seconds East a distance of 122.00 feet; thence South 2 degrees 15 minutes 44 seconds East a distance of 135.00 feet; thence westerly 24.34 feet along a non-tangential curve concave to the south, said curve has a radius of 283.00 feet, a central angle of 4 degrees 55 minutes 42 seconds, and a chord that bears South 83 degrees 14 minutes 55 seconds West; thence South 9 degrees 12 minutes 56 seconds East, not tangent to said curve a distance of 256.00 feet; thence South 5 degrees 22 minutes 02 seconds West a distance of 45.00 feet; thence South 62 degrees 36 minutes 22 seconds East a distance of 75.00 feet; thence South 58 degrees 38 minutes 19 seconds East a distance of 97.00 feet; thence South 45 degrees 51 minutes 28 seconds East a distance of 96.00 feet; thence South 33 degrees 17 minutes 50 seconds East a distance of 113.00 feet to the west line of Block 3, CROW RIVER HEIGHTS WEST FIRST ADDITION, Wright County, Minnesota; thence on a bearing of SOUTH, a distance of 39.13 feet to a corner of Lot 6, said Block 3; thence southeasterly, northeasterly, easterly, southerly and southeasterly, along the southwesterly boundary of said CROW RIVER HEIGHTS WEST FIRST ADDITION, a distance of 945.55 feet to the most southerly corner of Lot 1, Block 5, said CROW RIVER HEIGHTS WEST FIRST ADDITION, which corner is also on the west line of Block 4, CROW RIVER HEIGHTS EAST THIRD ADDITION, said Wright County; thence southwesterly and southerly, along the westerly line of said CROW RIVER HEIGHTS EAST THIRD ADDITION, and said line extended, a distance of 428.09 feet, to the south line of said Southeast Quarter of the Northeast Quarter and there terminating.

Collaborative Planning, LLC

MEMORANDUM

TO: Honorable Mayor and Council

FROM: Cindy Nash, AICP, City Planner

DATE: June 19, 2018

SUBJECT: **Crow River Heights West Future Additions** for (1) Planned Unit Development; and (2) Preliminary Plat

APPLICANT: Backes Companies

LOCATION: Generally located south of Beebe Lake Road, and west of Jasmine Ave NE and Jordan Ave NE.

COMPREHENSIVE PLAN: Neighborhood Residential

Description of Request

The applicant is proposing to plat 159 single-family lots, outlots, and right of way. Preliminary plat approval previously existed for this property, but that preliminary plat expired in 2010. The previous developer had graded much of the property and established the building pads on most of the site. Roads were graded, but utilities were not installed. The current developer is proposing a similar preliminary plat to the one previously approved, but modified as necessary to comply with current ordinance requirements.

This development is requesting the following approvals:

1. Planned Unit Development
2. Preliminary Plat.

The following items are included in the packet for review:

1. City Engineer Comment letter
2. City Planner Comment letter
3. Project Narrative
4. Preliminary Plat and Plan Set

Item 1: Planned Unit Development

Public Hearing: May 23, 2018 Planning Commission

Planned Unit Development (PUD)

The Developer is proposing to construct a 159-lot subdivision that is similar to the previously approved plans from 2000 for the site. The neighborhood to the east of the Subject Property has been developed under the previously approved plans, so the current proposal would be similar to the rest of the existing neighborhood. The property is zoned R-1A.

A PUD is intended to allow for the development of residential areas under a flexible regulatory process that allows for a joint planning design effort by the developer and the City. This process should result in benefits that preserve natural resources and amenities, assure a higher quality living environment, and develop a variety of housing types and densities as a single planned entity. The City may authorize departures from the strict requirements of the underlying zoning district after finding that the proposal is consistent with the Comprehensive Plan, the general purposes of the Zoning Ordinance, and if the project complies with the requirements outlined below (staff comments in italics).

1. The consistency of the proposed PUD with the comprehensive plan.
   Staff Comments: The proposed PUD is consistent with the Comprehensive Plan guidance of Neighborhood Residential.

2. The extent to which the proposed PUD is designed to form a desirable and unified environment within its own boundaries in terms of relationship of structure and open space, circulation patterns, visual character and sufficiency of drainage and utilities.
   Staff Comments: The proposed PUD consists of completion of the Crow River Heights neighborhood with single-family homes in a coving plan that is unified to the original PUD development that already was constructed. Taken together with the original development, it maintains a unified environment within its own boundaries and with the previous phases.

3. The extent to which the proposed uses will be compatible with present and planned uses in the surround area.
   Staff Comments: The proposed PUD maintains a compatible development pattern with the existing portions of Crow River Heights. Adjustments have been made to the plans previously approved to incorporate more recent ordinance requirements. In the 2000 plan, townhomes were also planned for the site but these have been removed from the current plans and replaced with single-family homes. The original design of the

neighborhood including the coving of front yard setbacks is being maintained.

4. That any exceptions to this article are justified by the design or the development.
   Staff Comments: Exceptions to the standard requirements of the Zoning Ordinance are justified by the design in order to maintain the existing development pattern of the neighborhood. Lot size reductions are appropriate in order to have the non-usable (pond) areas included within outlots rather than lots for better control over what occurs within them.

5. The sufficiency of each planned unit development phase's size, composition, and arrangement in order that its construction, and operation is feasible without dependence upon subsequent phases.
   Staff Comments: No further phases are planned.

6. The burden or impact created by the PUD on parks, schools, streets, and other public facilities and utilities.
   Staff Comments: An Environmental Assessment Worksheet (EAW) has been prepared for the property, which explores these impacts. The EAW and comments received from agencies did not identify any unanticipated impacts or burdens. CR 19 was identified in the traffic impact study as needing potential improvements in the future under either a Build or No-Build scenario.

7. The impact of the PUD on environmental quality and on the reasonable enjoyment of the surrounding properties.
   Staff Comments: The PUD was designed to continue the existing development pattern of the neighborhood in the same manner as previously planned. Staff has reviewed the proposed development plans and find that they are generally in compliance with ordinances as modified by conditions in staff memos, which ordinances are sufficient to protect the environmental quality.

<u>Variances from Zoning Requirements in Planned Unit Developments</u>

The City may vary the regulations of the Zoning Ordinance in PUDs, and the development is requesting the following variations from the standard zoning requirements:

Requirement	Standard Zoning	Variance Requested
Lot Size	12,000 square feet	7,342 square feet

Lot Width (at front setback)	80 feet	70 feet
Corner (Street) Side Yard Setback	30 feet	25 feet on certain lots as specified in the plans
Front Yard Setback	Minimum 30 feet	"Build to" line as specified by lot in plans to complete coving
Rear Yard Setback	30 feet	10 or 20 feet for lots specified in plans

An analysis of why the applicant feels these changes are necessary is included within the narrative.

Staff Recommendation

Staff recommends approving the PUD subject to the conditions below:

1. A Developer's Agreement acceptable to the City is entered into by and between the Developer and the City.

2. Adoption and publication of the ordinance as required by law.

3. All conditions of the City Engineer, City Attorney and City Planner are met.

4. The development must be constructed in substantial conformance with the Site Plans.

5. Single-family homes are the permitted use on the lots.

6. Outlots containing stormwater ponding shall be owned and maintained by the City.

7. The developer must submit foundation as-builts for each home constructed for the review of the Building Official.

8. Each lot is required to have a minimum of two (2) trees per lot and five (5) shrubs per lot, all located within the front yard. All portions of a lot that do not have landscape beds shall be sodded.

9. Variations from the City's Zoning Ordinance requirements are approved as follows:
    a. The lot size is reduced to 7,930 square feet.
    b. The lot width is reduced to 64 feet.
    c. The rear yard setback shall vary as shown on the plans and in the table.
    d. The front yard setbacks shall vary as shown on the plans and in the table.

e. The corner side setback shall vary as shown on the plans and in the table.

10. All other requirements of the City's Zoning Ordinance not specifically exempted above must be met.

EXHIBIT A ---- Lot Tabulation
Revised: 5-25-18

Block	Lot	Area (sf)	Width @ Front Setback	Front Setback	Rear Setback	Side Setback	Side Street Setback	House Pad Width	House Pad Depth
1	1	13167	106	30	30	10	N/A	55	50
	2	13232	107	30	30	10	N/A	55	50
	3	13236	107	30	30	10	N/A	55	50
	4	13459	104	30	30	10	N/A	55	50
	5	13706	97	35	30	10	N/A	55	50
	6	16530	76	35	30	10	N/A	55	50
	7	16226	76	37	30	10	N/A	55	50
	8	15525	77	40	30	10	N/A	55	50
	9	13936	78	43	30	10	N/A	55	50
	10	12385	78	41	30	10	N/A	55	50
2	1	11965	79	30	30	10	N/A	55	50
	2	11476	79	30	30	10	N/A	55	50
	3	11071	79	30	30	10	N/A	55	50
	4	9952	80	30	30	10	N/A	55	50
	5	11784	113	30	30	10	N/A	55	50
	6	11438	112	30	30	10	N/A	55	50
	7	10848	126	25	30	10	N/A	55	50
	8	9219	89	25	20	10	N/A	55	50
	9	10304	114	25	20	10	N/A	55	50
3	1	12134	79	45	30	10	N/A	55	50
	2	13556	79	45	30	10	N/A	55	50
	3	14838	79	45	30	10	N/A	55	50
	4	14686	79	45	30	10	N/A	55	50
4	1	11591	75	30	30	10	N/A	55	50
	2	13480	75	30	30	10	N/A	55	50
	3	17092	75	40	30	10	N/A	55	50
	4	19716	75	40	30	10	N/A	55	50
	5	10436	75	30	20	10	N/A	55	50
5	1	11838	98	30	30	10	N/A	55	50
	2	12023	93	30	30	10	N/A	55	50
	3	11441	93	30	30	10	N/A	55	50
	4	10175	93	30	20	10	N/A	55	50
	5	11315	95	30	20	10	25	55	50
	6	10838	86	25	30	10	N/A	55	50
	7	13944	77	25	30	10	N/A	55	50
6	1	14982	71	25	30	10	N/A	50	50
	2	23736	77	25	30	10	N/A	55	50
	3	9720	84	25	10	10	N/A	55	50
	1	8044	75	25	10	10	N/A	55	50
	2	10111	91	30	10	10	25	55	50

EXHIBIT A ---- Lot Tabulation
Revised: 5-25-18

Block	Lot	Area (sf)	Width @ Front Setback	Front Setback	Rear Setback	Side Setback	Side Street Setback	House Pad Width	House Pad Depth
	3	10430	75	30	20	10	N/A	55	50
	4	12362	98	30	10	10	30	55	50
	5	12307	77	25	20	10	N/A	55	50
7	6	25873	77	25	30	10	N/A	55	50
	7	18974	77	25	30	10	N/A	55	50
	8	16660	107	25	30	10	N/A	55	50
	9	14432	84	25	30	10	N/A	55	50
	10	12316	75	25	30	10	N/A	55	50
	11	9022	75	25	20	10	N/A	55	50
	1	7516	70	25	10	10	N/A	50	50
	2	10294	75	25	20	10	N/A	55	50
	3	9889	75	25	20	10	N/A	55	50
8	4	7342	75	25	10	10	N/A	55	45
	5	7574	75	25	10	10	N/A	55	45
	6	9039	75	25	20	10	N/A	55	50
	7	10885	97	25	20	10	30	55	50
	1	10107	88	25	30	10	N/A	55	50
9	2	9563	77	25	30	10	N/A	55	50
	3	9954	77	25	30	10	N/A	55	50
	1	11490	75	30	30	10	N/A	55	50
	2	12314	75	30	30	10	N/A	55	50
	3	17170	75	30	30	10	N/A	55	50
	4	18589	75	32	30	10	N/A	55	50
	5	12928	75	32	30	10	N/A	55	50
	6	10718	75	30	30	10	N/A	55	50
	7	9750	75	30	30	10	N/A	55	50
	8	9750	75	30	30	10	N/A	55	50
	9	9750	75	30	30	10	N/A	55	50
	10	9750	75	30	30	10	N/A	55	50
10	11	9750	75	30	30	10	N/A	55	50
	12	9750	75	30	30	10	N/A	55	50
	13	10195	75	30	30	10	N/A	55	50
	14	11310	75	30	30	10	N/A	55	50
	15	13642	75	30	30	10	N/A	55	50
	16	13141	96	30	20	10	30	55	50
	17	14344	77	30	30	10	N/A	55	50
	18	13964	77	30	30	10	N/A	55	50
	19	16615	77	30	30	10	N/A	55	50
	20	11668	76	30	20	10	N/A	55	50
	21	12462	96	30	20	10	30	55	50

EXHIBIT A ---- Lot Tabulation
Revised: 5-25-18

Block	Lot	Area (sf)	Width @ Front Setback	Front Setback	Rear Setback	Side Setback	Side Street Setback	House Pad Width	House Pad Depth
11	1	11344	101	30	30	10	N/A	55	50
	2	10896	104	30	30	10	N/A	55	50
	3	11033	75	30	30	10	N/A	55	50
	4	10802	75	30	30	10	N/A	55	50
	5	10340	75	30	30	10	N/A	55	50
	6	11676	95	30	20	10	30	55	50
	7	10361	101	25	20	10	N/A	55	50
	8	10619	94	25	30	10	N/A	55	50
12	1	9230	70	30	30	10	N/A	50	50
	2	9240	70	30	30	10	N/A	50	50
	3	8795	70	30	20	10	N/A	50	50
	4	9366	75	30	20	10	N/A	55	50
	5	10298	75	30	20	10	N/A	55	50
	6	11125	75	30	30	10	N/A	55	50
	7	11979	75	30	30	10	N/A	55	50
	8	15626	77	30	30	10	N/A	55	50
	9	8649	78	25	10	10	N/A	55	45
13	1	12514	99	25	30	10	25	55	50
	2	9890	90	25	20	10	25	55	50
	3	9409	75	25	30	10	N/A	55	50
	4	9122	75	25	20	10	N/A	55	50
	5	7908	88	25	10	10	N/A	55	45
	6	8580	76	25	20	10	N/A	55	50
	7	8794	75	25	20	10	N/A	55	50
	8	8794	75	25	20	10	N/A	55	50
	9	11201	95	30	20	10	30	55	50
	10	8960	75	30	20	10	N/A	55	50
14	1	9940	75	30	20	10	N/A	55	50
	2	10118	75	30	20	10	N/A	55	50
	3	11879	95	30	30	10	30	55	50
	4	9461	75	30	30	10	N/A	55	50
	5	9899	87	30	20	10	N/A	55	50
	6	9757	88	30	20	10	N/A	55	50
	7	9778	86	30	20	10	N/A	55	50
	8	9315	75	30	20	10	N/A	55	50
	9	11959	136	30	20	10	N/A	55	50
	10	11855	137	30	20	10	N/A	55	50
	11	9130	75	30	20	10	N/A	55	50
	12	9406	75	30	20	10	N/A	55	50
	13	9734	75	30	20	10	N/A	55	50

EXHIBIT A ---- Lot Tabulation
Revised: 5-25-18

Block	Lot	Area (sf)	Width @ Front Setback	Front Setback	Rear Setback	Side Setback	Side Street Setback	House Pad Width	House Pad Depth
	14	9951	75	30	30	10	N/A	55	50
	15	10611	75	30	30	10	N/A	55	50
	16	13145	95	25	30	10	30	55	50
	17	10807	106	25	30	10	N/A	55	50
	18	9446	75	25	20	10	N/A	55	50
	19	8773	70	25	20	10	N/A	50	50
	20	9199	75	25	20	10	N/A	55	50
	21	9531	75	25	30	10	N/A	55	50
	22	11622	95	25	30	10	30	55	50
	23	10447	75	30	20	10	N/A	55	50
15	1	17544	80	30	30	10	N/A	55	50
	2	14281	80	30	30	10	N/A	55	50
	3	15284	114	30	30	10	30	55	50
	4	11671	95	30	20	10	30	55	50
	5	10254	75	30	30	10	N/A	55	50
	6	11818	75	30	30	10	N/A	55	50
	7	16244	70	30	30	10	N/A	50	50
	8	13483	71	30	30	10	N/A	50	50
	9	11222	75	30	30	10	N/A	55	50
	10	11777	75	30	30	10	N/A	55	50
	11	16767	75	30	30	10	N/A	55	50
	12	21468	75	30	30	10	N/A	55	50
	13	14738	77	30	30	10	N/A	55	50
	14	19994	77	30	30	10	N/A	55	50
	15	14730	77	30	30	10	N/A	55	50
	16	15387	76	30	30	10	N/A	55	50
	17	16473	166	30	25	10	30	55	50
	18	10093	75	30	30	10	N/A	55	50
	19	9134	75	30	20	10	N/A	55	50
	20	12387	102	30	20	10	N/A	55	50
	21	10312	81	30	30	10	N/A	55	50
	22	10478	78	30	30	10	N/A	55	50
	23	10328	78	30	30	10	N/A	55	50
	24	11006	78	30	30	10	N/A	55	50
	25	11356	78	30	30	10	N/A	55	50
	26	11394	78	30	30	10	N/A	55	50
16	1	12712	106	30	20	10	30	55	50
	2	11877	75	30	30	10	N/A	55	50
	3	17538	75	30	30	10	N/A	55	50

Item 2: Recommendation on Preliminary Plat

Public Hearing: May 23, 2018 Planning Commission

Preliminary plats provide the layout for lots and blocks for future sale and ownership of specific parcels. The preliminary plat is "preliminary", however approval of a preliminary plat gives the property rights by State law.

Land Use

The proposed land use is 159 single-family lots, and outlots for stormwater ponding and trail connections.

Access, Roads, Guest Parking Pedestrian Circulation

Jasmine Avenue NE and Jordan Ave NE are both proposed to be extended. The development is also connecting to Jandel Avenue NE. Additional cul-de-sac streets are also proposed.

A temporary cul-de-sac and easement at the western end of Jasmine Avenue NE will be required, along with a cash security to ensure removal of those temporary cul-de-sacs in the future.

A traffic study was included as part of the Environmental Assessment Worksheet (EAW).

Street names are not being reviewed at this time.

Utilities

Utilities are proposed to be installed within the rights of way.

Ponding is located in outlots that will be deeded to the City. In the past, much of the ponding has been included within the lots.

Wetlands

There are numerous wetlands on the site as shown on the site plans. A portion of the wetlands will be impacted by the project and are proposed to be mitigated on-site in Outlot F. The developer is also proposing to restore a wetland in Outlot I.

Generally, the wetland and stormwater infrastructure are proposed to be owned by the City following their completion. These features would be contained within outlots rather than being a part of individual homeowner lots. Wetland permitting for the mitigation has not yet been

completed and there could be some change to the plans of the developer based on that permitting, which may or may not need to result in some changes to the preliminary plat. Given the extended timeframe for monitoring the creation and restoration of wetlands, additional discussion and consideration will need to be given prior to City ownership of Outlots F and I. This does not need to be determined at this time and can wait until a final plat is proposed that contains these locations.

Park Dedication

Park dedication is required for this plat, and will be calculated at the time of execution of the developers agreement.

Landscaping

Sheets L1-1 through L2-1 contains the proposed landscaping plan. The landscaping plans identify 2 trees and 5 shrubs per lot. In addition, the specific plants called for on each lot could be selected by the homeowner.

Engineering

The development should comply with the requirements of the City Engineers memo.

Staff Recommendation on Preliminary

Staff recommends approving the Preliminary subject to the following conditions to be included in the resolution:

1. All comments contained within the memo from WSB dated June 11, 2018 and the memo from Collaborative Planning dated June 15, 2018 are incorporated herein (collectively referred to as the "Staff Memos").

2. The Subject Property shall be constructed in substantial compliance with the Site Plans as revised to conform to the requirements of the Staff Memos.

3. No construction shall be permitted on the Subject Property until updated Site Plans addressing the comments of the Staff Memos and the conditions of this Resolution are provided for review and approval by the City Engineer and City Planner.

4. To the extent that there are differences or conflicts between the Site Plans and this resolution, the terms of this resolution shall be controlling.

5. A title commitment shall be provided for the review of the City Attorney before the final plat is released for recording.

6. Financial security in a form approved by the City Attorney and in an amount approved by the City Engineer must be provided by the Developer prior to release of the final plat for recording. The Developer's Agreement shall specify the amount of the financial security.

7. The Developer must reimburse the City for all costs incurred by the City and its consultants in relation to review of the proposed development plans as well as the preparation of the Developer's Agreement.

8. Any new utility lines installed to serve the Subject Property are required to be placed underground.

9. The Developer shall be responsible for securing necessary easements and for constructing all streets, utility, trail, stormwater, and other improvements shown on the Approved Construction Plans at their own expense. However, to the extent that such utilities are oversized at the request of the City, the City shall reimburse the Developer for the cost of the extra diameter of the pipe. All reimbursements by the City under this paragraph are subject to the submittal by the Developer of the engineer's estimate and other supporting information as requested by the City. The engineer's estimate will be reviewed by the City to verify that the costs requested for reimbursement are reasonable at the sole determination of the City, and the amount determined by the City to be eligible for reimbursement shall be included within the Developers Agreement.

10. The Developer shall be responsible for obtaining and complying with all necessary permits from the Wright County Soil and Water Conservation District, Minnesota Department of Health, DNR, MPCA, and any other governmental agencies prior to commencement of development activities on the site.

11. The Developer shall incorporate the standards and procedures of the Best Management Practices Handbook for site restoration and erosion control measures during the construction process.

12. The Developer must submit details on corrected building pads including compaction tests, limits of the pads and elevations of the excavations. The general soils report for the development must also be submitted to the City Engineer for review and approval prior to the issuance of building permits.

13. Park dedication, sanitary sewer trunk, water trunk, storm sewer trunk and storm warning siren fees shall be paid prior to release of the final plat for recording as per the City fee schedule in effect at the time of the execution of the Developer's Agreement.

14. The Developer shall survey all storm water holding ponds (if any are constructed) as required by the City. The Developer shall be responsible for storm sewer cleaning and holding pond dredging, as required, by the City prior to completion of the development of the Subject Property.

15. Additional conditions as determined necessary by the City Planner, City Engineer, and City Attorney as review of the project progresses and is completed.

PROJECT NARRATIVE

April 20, 2018

Ms. Cindy Nash, City Planner
Hanover Planning Commission
City of Hanover
11250 5th Street NE
Hanover, MN 55341

Re: Application for Preliminary and Residential Planned Unit Development (PUD)
CROW RIVER HEIGHTS WEST – FUTURE ADDITIONS

Dear Ms. Nash and Members of the Planning Commission:

Backes Development is pleased to submit this application for preliminary plat review and PUD of the CROW RIVER HEIGHTS WEST - FUTURE ADDITIONS. This narrative is intended to generally describe the project and address specific development topics.

Development History
The original preliminary plat of Crow River Heights was approved by the City in 2000. It was approved as a PUD with an underlying R1A zoning. The PUD included varied front setbacks and lot area. In 2006 the second phase of the plat was started which included the extension of Jasmine Ave., Jasmine Court and Jordan Ave. Utilities were stubbed for future extension and the site was graded per the preliminary plan for the future streets and lots.

In 2017, Backes Development proposed to complete the remaining lots. The city approved the development of 30 lots - CROW RIVER HEIGHTS WEST 3RD ADDITION. The development consisted of 14 new lots on a westerly extension of Jasmine Ave. and 16 new lots on a westerly extension of Jordan Ave

The CROW RIVER HEIGHTS WEST 3RD ADDITION was approved with a condition of a new EAW submittal for the remaining 160 lots. The EAW has been submitted separately as part of this application.

The preliminary plat shows a total of 159 lots within the total site area of 72 acres, resulting in a density of 2.2 lots per acre.

Location / Current Use
A portion of the site is currently graded with street subcuts and partial ponding areas. The site is vacant and was used partially for agricultural use. There are several wetland basins throughout the site with a grouping of trees in the southwest corner.

Proposed PUD
CRHWA proposes to use the same current underlying zoning requirements for the R1A zone along with a PUD overlay to continue the original planning concept. However, certain ordinances have changed that are incorporated into the proposed plat. (See Table 1 for lot tabulation)

Lot Area
R1A minimum lot area – 12,000 sf

PUD minimum lot area – 7,342 sf
PUD average lot area - 11,968 sf

The impetus for smaller lots are the City's updated stormwater and wetland requirements. The City now requires that all stormwater ponding areas be located within an Outlot. This reduced the backyard areas that were originally extended out into the ponding areas. The proposed outlots encompass the high water level (HWL) so no flooding occurs in the lots. The outlots also provide the City with access to the pond area for maintenance.

The City requires that all wetlands be protected with a 30 foot wetland buffer area. This also reduced backyard areas that extended closer to the wetland edge. The proposed lots do not extend into the wetland buffer area.

Lot Width
R1A minimum width at the front setback - 80 ft

PUD minimum width at the front setback for 55' wide house pad - 75 ft
PUD minimum width at the front setback for 50' wide house pad – 70 ft
PUD side yard setbacks - 10 ft

Front Setback
R1A minimum front setback- 30 ft

PUD minimum front setback- 25 - 45 ft

The original preliminary plat showed a variable front setback based upon a 'coving' concept. In 2006 +/- a portion of the proposed streets were graded according to the preliminary plan. Therefore, a few of the proposed house pads are located with varied front setbacks. In addition, to preserve and provide the 30 foot buffer around the wetlands some of the lot's building pads are pushed forward toward the street.

Rear Setback
R1A minimum rear setback- 30 ft

PUD minimum rear setback- 10 ft

The majority of the lots conform to the 30 foot rear setback. There are lots that require a reduced setback. The impetus for smaller rear setbacks are to allow for the Outlots to encompass the stormwater ponding and to provide the 30 foot wetland buffer area.

All of the lots have at least 10 feet from the back of the building pad to the rear setback line to provide space for a deck or patio. The majority of these lots are all full-basement walkouts. A deck will most likely be level with the main floor – above ground -to allow access underneath it to the lowest walk-out entry. Therefore, the deck will not cover any backyard area, nor hinder any usage of the backyard area giving full use of the rear green space.

Side Setback
R1A minimum side setback – 10 ft

PUD minimum side setback – 10 ft

R1A minimum street side setback – 30 ft

PUD minimum street side setback – 25 ft

There are a few lots which have a side street setback of 25 feet. This is to provide adequate lot and house pad width.

Table 1

Block	Lot	Area (sf)	Width @ Front Setback	Front Setback	Rear Setback	Side Setback	Side Street Setback	House Pad Width	House Pad Depth
1	1	13167	106	30	30	10	N/A	55	50
	2	13232	107	30	30	10	N/A	55	50
	3	13236	107	30	30	10	N/A	55	50
	4	13459	104	30	30	10	N/A	55	50
	5	13706	97	35	30	10	N/A	55	50
	6	16530	76	35	30	10	N/A	55	50
	7	16226	76	37	30	10	N/A	55	50
	8	15525	77	40	30	10	N/A	55	50
	9	13936	78	43	30	10	N/A	55	50
	10	12385	78	41	30	10	N/A	55	50
2	1	11965	79	30	30	10	N/A	55	50
	2	11476	79	30	30	10	N/A	55	50
	3	11071	79	30	30	10	N/A	55	50
	4	9952	80	30	30	10	N/A	55	50
	5	11784	113	30	30	10	N/A	55	50
	6	11438	112	30	30	10	N/A	55	50
	7	10848	126	25	30	10	N/A	55	50
	8	9219	89	25	20	10	N/A	55	50
3	1	12134	79	45	30	10	N/A	55	50
	2	13556	79	45	30	10	N/A	55	50
	3	14838	79	45	30	10	N/A	55	50
	4	14686	79	45	30	10	N/A	55	50
4	1	11591	75	30	30	10	N/A	55	50
	2	13480	75	30	30	10	N/A	55	50
	3	17092	75	40	30	10	N/A	55	50
	4	19716	75	40	30	10	N/A	55	50
	5	10436	75	30	20	10	N/A	55	50
5	1	11838	98	30	30	10	N/A	55	50
	2	12023	93	30	30	10	N/A	55	50
	3	11441	93	30	30	10	N/A	55	50
	4	10175	93	30	20	10	N/A	55	50
	5	11315	95	30	20	10	25	55	50
	6	10838	86	25	30	10	N/A	55	50
	7	13944	77	25	30	10	N/A	55	50

6	1	14982	71	25	30	10	N/A	50	50
	2	23736	77	25	30	10	N/A	55	50
	3	9720	84	25	10	10	N/A	55	50
7	1	8044	75	25	10	10	N/A	55	50
	2	10111	91	30	10	10	25	55	50
	3	10430	75	30	20	10	N/A	55	50
	4	12362	98	30	10	10	30	55	50
	5	12307	77	25	20	10	N/A	55	50
	6	25873	77	25	30	10	N/A	55	50
	7	18974	77	25	30	10	N/A	55	50
	8	16660	107	25	30	10	N/A	55	50
	9	14432	84	25	30	10	N/A	55	50
	10	12316	75	25	30	10	N/A	55	50
	11	9022	75	25	20	10	N/A	55	50
8	1	7516	70	25	10	10	N/A	50	50
	2	10294	75	25	20	10	N/A	55	50
	3	9889	75	25	20	10	N/A	55	50
	4	7342	75	25	10	10	N/A	55	45
	5	7574	75	25	10	10	N/A	55	45
	6	9039	75	25	20	10	N/A	55	50
	7	10885	97	25	20	10	30	55	50
9	1	10546	121	25	20	10	N/A	55	50
	2	9788	83	25	30	10	N/A	55	50
	3	9563	77	25	30	10	N/A	55	50
	4	9954	77	25	30	10	N/A	55	50
10	1	11490	75	30	30	10	N/A	55	50
	2	12314	75	30	30	10	N/A	55	50
	3	17170	75	30	30	10	N/A	55	50
	4	18589	75	32	30	10	N/A	55	50
	5	12928	75	32	30	10	N/A	55	50
	6	10718	75	30	30	10	N/A	55	50
	7	9750	75	30	30	10	N/A	55	50
	8	9750	75	30	30	10	N/A	55	50
	9	9750	75	30	30	10	N/A	55	50
	10	9750	75	30	30	10	N/A	55	50
	11	9750	75	30	30	10	N/A	55	50
	12	9750	75	30	30	10	N/A	55	50
	13	10195	75	30	30	10	N/A	55	50
	14	11310	75	30	30	10	N/A	55	50
	15	13642	75	30	30	10	N/A	55	50
	16	13141	96	30	20	10	30	55	50
	17	14344	77	30	30	10	N/A	55	50
	18	13964	77	30	30	10	N/A	55	50
	19	16615	77	30	30	10	N/A	55	50

	20	11668	76	30	20	10	N/A	55	50
	21	12462	96	30	20	10	30	55	50
11	1	11344	75	30	30	10	N/A	55	50
	2	10896	75	30	30	10	N/A	55	50
	3	11033	75	30	30	10	N/A	55	50
	4	10802	75	32	30	10	N/A	55	50
	5	10340	75	32	30	10	N/A	55	50
	6	11676	75	30	20	10	30	55	50
	7	10558	75	30	20	10	N/A	55	50
	8	10422	75	30	30	10	N/A	55	50
12	1	9230	70	30	30	10	N/A	50	50
	2	9240	70	30	30	10	N/A	50	50
	3	8795	70	30	20	10	N/A	50	50
	4	9366	75	30	20	10	N/A	55	50
	5	10298	75	30	20	10	N/A	55	50
	6	11125	75	30	30	10	N/A	55	50
	7	11979	75	30	30	10	N/A	55	50
	8	15626	77	30	30	10	N/A	55	50
	9	8649	78	25	10	10	N/A	55	45
13	1	12514	99	25	30	10	25	55	50
	2	9890	90	25	20	10	25	55	50
	3	9409	75	25	30	10	N/A	55	50
	4	9122	75	25	20	10	N/A	55	50
	5	7908	88	25	10	10	N/A	55	45
	6	8580	76	25	20	10	N/A	55	50
	7	8794	75	25	20	10	N/A	55	50
	8	8794	75	25	20	10	N/A	55	50
	9	11201	95	30	20	10	30	55	50
	10	8960	75	30	20	10	N/A	55	50
14	1	9909	75	30	20	10	N/A	55	50
	2	10171	75	30	20	10	N/A	55	50
	3	12118	95	30	30	10	30	55	50
	4	9563	75	30	30	10	N/A	55	50
	5	9928	87	30	20	10	N/A	55	50
	6	9757	88	30	20	10	N/A	55	50
	7	9778	86	30	20	10	N/A	55	50
	8	9315	75	30	20	10	N/A	55	50
	9	11959	136	30	20	10	N/A	55	50
	10	11855	137	30	20	10	N/A	55	50
	11	9130	75	30	20	10	N/A	55	50
	12	9406	75	30	20	10	N/A	55	50
	13	9734	75	30	20	10	N/A	55	50
	14	9951	75	30	30	10	N/A	55	50
	15	10611	75	30	30	10	N/A	55	50

	16	13145	95	25	30	10	30	55	50
	17	10807	106	25	30	10	N/A	55	50
	18	9446	75	25	20	10	N/A	55	50
	19	8773	70	25	20	10	N/A	50	50
	20	9199	75	25	20	10	N/A	55	50
	21	9531	75	25	30	10	N/A	55	50
	22	11622	95	25	30	10	30	55	50
	23	10080	75	30	20	10	N/A	55	50
15	1	17544	80	30	30	10	N/A	55	50
	2	14281	80	30	30	10	N/A	55	50
	3	15284	114	30	30	10	45	55	50
	4	11671	95	30	20	10	30	55	50
	5	10254	75	30	30	10	N/A	55	50
	6	11818	75	30	30	10	N/A	55	50
	7	16244	70	30	30	10	N/A	50	50
	8	13483	71	30	30	10	N/A	50	50
	9	11222	75	30	30	10	N/A	55	50
	10	11777	75	30	30	10	N/A	55	50
	11	16767	75	30	30	10	N/A	55	50
	12	21468	75	30	30	10	N/A	55	50
	13	14738	77	30	30	10	N/A	55	50
	14	19994	77	30	30	10	N/A	55	50
	15	14730	77	30	30	10	N/A	55	50
	16	15387	76	30	30	10	N/A	55	50
	17	16473	166	30	20	10	N/A	55	50
	18	10093	75	30	30	10	N/A	55	50
	19	9134	75	30	20	10	N/A	55	50
	20	12387	102	30	20	10	N/A	55	50
	21	10312	81	30	30	10	N/A	55	50
	22	10478	78	30	30	10	N/A	55	50
	23	10328	78	30	30	10	N/A	55	50
	24	11006	78	30	30	10	N/A	55	50
	25	11356	78	30	30	10	N/A	55	50
	26	11394	78	30	30	10	N/A	55	50
16	1	12712	106	30	20	10	40	55	50
	2	11877	75	30	30	10	N/A	55	50
	3	17538	75	30	30	10	N/A	55	50

Wetlands

There are intermittent wetlands on the site. The wetlands have been delineated by Kjolhaug Environmental. The final wetland locations have been reviewed and approved by the Technical Evaluation Panel (TEP). Wetland impacts are proposed.

A meeting was held at the City on March 2, 2018 to discuss the wetland impacts. Representatives from the City, Kjolhaug, the TEP and the developer were in attendance. It

was mutually agreed that the small isolated wetlands have little value and even if saved would ultimately be impacted by any surrounding development. It was stressed that the larger wetland areas should be saved.

The proposed plan shows that the small wetland areas are to be impacted. The larger wetland areas are not impacted and preserved. These large wetland areas are shown with a 30 foot buffer area which are not impacted. The entire buffer and wetland area is encompassed by Outlots which will be dedicated to the City. An access is provided from these Outlots to the adjacent street right-of-way for maintenance purposes.

Total wetland area on site – 267,156 sf
Total wetland impact – 24,901 sf
Wetland mitigation – 49,802 sf

Wetland mitigation is proposed to be on-site creation of wetlands.

Cul-De-Sac Streets
Maximum cul-de-sac length – 500 ft

PUD maximum cul-de-sac length – 664 ft

Jandel Cove is a cul-de-sac street which provides access to a land-locked area in the far southwest corner of the site. This area is surrounded by the City of St. Michael along the west side; the existing WHITETAIL PRESERVE development along the south side and the extension of Jandel Ave. along the east side. To provide access to the available developable land the cul-de-sac is 664 feet in length.

Intended Market
The anticipated sale prices of the homes are $325,000 – 375,000, which serves a medium family household income market.

City Goals
If approved, the proposed project will proceed as a PUD housing development intent on accomplishing the following goals:

- Continue the previously approved plat in conformance with current regulations.
- Utilize existing infrastructure including graded house pads; water and sanitary sewer stubs and street extensions.
- Protect the wetland on site with buffers
- Keep ponds and wetlands/buffers out of the lots to have city control of their maintenance and function.
- Develop residential property that is harmonious to the surrounding area and grows the city tax base.

Thank you for considering this development project. We look forward to your recommendations and approvals.

Dennis "Buck" Backes
Backes Development

CROW RIVER HEIGHTS WEST

FUTURE ADDITIONS

HANOVER, MINNESOTA

PRELIMINARY PLANS FOR:
SITE GRADING, SANITARY SEWER, WATERMAIN,
STORM SEWER AND STREET CONSTRUCTION

VICINITY MAP

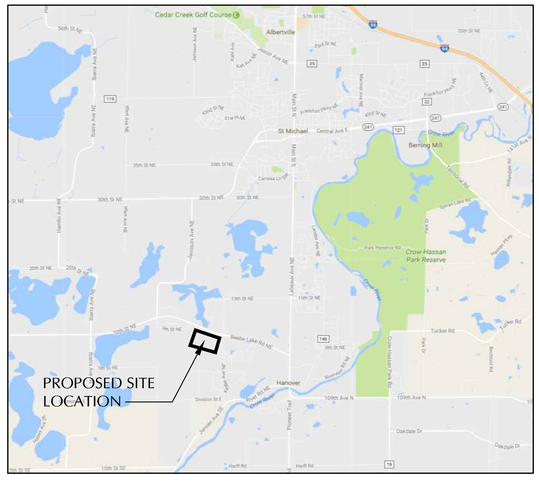

WARNING:

THE CONTRACTOR SHALL BE RESPONSIBLE FOR CALLING FOR LOCATIONS OF ALL EXISTING UTILITIES. THEY SHALL COOPERATE WITH ALL UTILITY COMPANIES IN MAINTAINING THEIR SERVICE AND / OR RELOCATION OF LINES.

THE CONTRACTOR SHALL CONTACT GOPHER STATE ONE CALL AT 651-454-0002 AT LEAST 48 HOURS IN ADVANCE FOR THE LOCATIONS OF ALL UNDERGROUND WIRES, CABLES, CONDUITS, PIPES, MANHOLES, VALVES OR OTHER BURIED STRUCTURES BEFORE DIGGING. THE CONTRACTOR SHALL REPAIR OR REPLACE THE ABOVE WHEN DAMAGED DURING CONSTRUCTION AT NO COST TO THE OWNER.

DEVELOPER

BACKES DEVELOPMENT, LLC
11413 ASHBURY CIRCLE N.
CHAMPLIN, MN 55316

DENNIS BACKES
TEL: 612.369.7750
FAX: 612.566.1525

CALL BEFORE YOU DIG!
Gopher State One Call
TWIN CITY AREA: 651-454-0002
TOLL FREE: 1-800-252-1166

BENCHMARKS

TOP NUT HYDRANT AT END OF JASMINE CT
CUL-DE-SAC, Elevation = 975.48 feet (NGVD1929).

CROW RIVER HEIGHTS WEST FUTURE ADD.
HANOVER, MN

BACKES COMPANIES
11413 ASHBURY CIRCLE N.
CHAMPLIN, MN 55316
PHONE: (612) 369-7750
FAX (612) 566-1525

LOUCKS
PLANNING
CIVIL ENGINEERING
LAND SURVEYING
LANDSCAPE ARCHITECTURE
ENVIRONMENTAL
7200 Hemlock Lane, Suite 300
Maple Grove, MN 55369
763.424.5505
www.loucksinc.com

CADD QUALIFICATION

CADD files prepared by the Consultant for this project are instruments of the Consultant professional services for use solely with respect to this project. These CADD files shall not be used on other projects, for additions to this project, or for completion of this project by others without written approval by the Consultant. Given the nature and capabilities of the CADD system, permitted copies of the CADD drawing files are for information and reference only. All intentional or unintentional revisions, additions, or deletions to these CADD files shall be made at the full risk of that party making such revisions, additions or deletions and that party shall hold harmless and indemnify the Consultant from any & all responsibilities, claims, and liabilities.

SUBMITTAL/REVISIONS

04/20/18	CITY SUBMITTAL
05/24/18	CITY COMMENTS

PROFESSIONAL SIGNATURE

I hereby certify that this plan, specification or report was prepared by me or under my direct supervision and that I am a duly Licensed Professional Engineer under the laws of the State of Minnesota.

PRELIMINARY

Licensed Professional Engineer: Zachary H. McLouth - PE
Date: License No. 20383

QUALITY CONTROL

Loucks Project No.	16101A
Project Lead	TWM
Drawn By	ZHW
Checked By	TWM
Review Date	05/24/18

SHEET INDEX

C0-1	COVER SHEET
C1-1	EXISTING CONDITIONS
C1-2	PRELIMINARY PLAT
C2-0 - C2-2	SITE PLAN
C3-0 - C3-2	GRADING PLAN
C3-3 - C3-5	SWPPP PLAN & NOTES
C4-0 - C4-2	UTILITY PLAN
C8-1 - C8-2	DETAILS
L0-1 - L0-3	TREE PRESERVATION
L0-4	TREE INVENTORY
L1-1 - L1-2	LANDSCAPE PLANS
L2-1	LANDSCAPE DETAILS

COVER SHEET
C0-1

Plotted: 05 /25 / 2018 11:51 AM W:\2016\16101A\CADD DATA\CIVIL_dwg Sheet Files\C0-1 COVER SHEET

0 100 200
SCALE IN FEET

SURVEY LEGEND

AS	ASH	CATCH BASIN	STORM SEWER
AP	APPLE	STORM MANHOLE	SANITARY SEWER
BA	BASSWOOD	SANITARY MANHOLE	WATERMAIN
BI	BIRCH	WATER MANHOLE	SANITARY SEWER SERVICE
BO	BOXELDER	HYDRANT	WATER SERVICE
BU	BUCKEYE	GATE VALVE	CULVERT
BS	BUSH	POWER POLE	UNDERGROUND CABLE TV
CA	CATULPA	LIGHT POLE	UNDERGROUND ELECTRIC
CE	CEDAR	YARD LIGHT	UNDERGROUND FIBER OPTIC
CO	COTTONWOOD	GUY WIRE	UNDERGROUND GAS
DE	DEAD TREE	SIGN	UNDERGROUND TELEPHONE
EL	ELM	SPOT ELEVATION	UNDERGROUND UTILITY
FR	MISC FRUIT	A/C UNIT	OVERHEAD UTILITY
FI	FIR	CABLE TV PEDESTAL	UNDERGROUND TRAFFIC
HA	HACKBERRY	ELECTRIC TRANSFORMER	DRAIN TILE
HI	HICKORY	TELEPHONE PEDESTAL	FORCE MAIN
IR	IRONWOOD	UTILITY PEDESTAL	CHAIN LINK FENCE
LI	LINDEN	ELECTRIC MANHOLE	POST FENCE
LO	LOCUST	GAS VALVE	WOOD FENCE
MA	MAPLE	TELEPHONE MANHOLE	GUARDRAIL
OA	OAK	UTILITY MANHOLE	RETAINING WALL
PA	PALM	ELECTRIC METER	TRAFFIC SIGNAL
PI	PINE	GAS METER	CONCRETE CURB
PO	POPLAR	HAND HOLE	CONCRETE
SP	SPRUCE	ROOF DRAIN	BITUMINOUS
TR	TREE (GEN)	ELECTRIC OUTLET	PAVERS
WA	WALNUT	FIRE CONNECTION	CONTOUR
WI	WILLOW	MAILBOX	RAILROAD TRACKS
TC	TOP OF CURB	FLAG POLE	CONIFEROUS TREE
TW	TOP OF WALL	GUARDPOST	DECIDUOUS TREE
THSD	ELEV @ THRESHOLD	MONITORING WELL	WETLAND DELINATION KJOLHAUG ENV. 05/17/18
		POST INDICATOR VALVE	
		SOIL BORING	

CROW RIVER HEIGHTS WEST FUTURE ADD.

HANOVER, MN

BACKES COMPANIES
11413 ASHBURY CIRCLE N.
CHAMPLIN, MN 55316
PHONE: (612) 369-7750
FAX (612) 566-1525

LOUCKS
PLANNING
CIVIL ENGINEERING
LAND SURVEYING
LANDSCAPE ARCHITECTURE
ENVIRONMENTAL
7200 Hemlock Lane, Suite 300
Maple Grove, MN 55369
763.424.5505
www.loucksinc.com

CADD QUALIFICATION

CADD files prepared by the Consultant for this project are instruments of the Consultant professional services for use solely with respect to this project. These CADD files shall not be used on other projects, for additions to this project, or for completion of this project by others without written approval by the Consultant. Under no circumstances shall transfer of these files be permitted. Alternate copies of the CADD drawing files are for information and reference only. All intentional or unintentional revisions, additions, or deletions to these CADD files shall be made at the full risk of that party making such revisions, additions or deletions and that party shall hold harmless and indemnify the Consultant from any & all responsibilities, claims, and liabilities.

SUBMITTAL/REVISIONS

04/20/18	CITY SUBMITTAL
05/24/18	CITY COMMENTS

PROFESSIONAL SIGNATURE

I hereby certify that this plan, specification, or report was prepared by me or under my direct supervision and that I am a duly Licensed Professional Engineer under the laws of the State of Minnesota.

PRELIMINARY

Licensed Professional Engineer: Trevor W. McLouth - PE
Date: License No. 20383

QUALITY CONTROL

Loucks Project No.	16101A
Project Lead	TWM
Drawn By	ZHW
Checked By	TWM
Review Date	05/24/18

SHEET INDEX

C0-1	COVER SHEET
C1-1	EXISTING CONDITIONS
C1-2	PRELIMINARY PLAT
C2-0 - C2-2	SITE PLAN
C3-0 - C3-2	GRADING PLAN
C3-3 - C3-5	SWPPP PLAN & NOTES
C4-0 - C4-2	UTILITY PLAN
C8-1 - C8-2	DETAILS
L0-1 - L0-3	TREE PRESERVATION
L0-4	TREE INVENTORY
L1-1 - L1-2	LANDSCAPE PLANS
L2-1	LANDSCAPE DETAILS

CALL BEFORE YOU DIG!
Gopher State One Call
TWIN CITY AREA: 651-454-0002
TOLL FREE: 1-800-252-1166

WARNING:

THE CONTRACTOR SHALL BE RESPONSIBLE FOR CALLING FOR LOCATIONS OF ALL EXISTING UTILITIES. THEY SHALL COOPERATE WITH ALL UTILITY COMPANIES IN MAINTAINING THEIR SERVICE AND / OR RELOCATION OF LINES.

THE CONTRACTOR SHALL CONTACT GOPHER STATE ONE CALL AT 651-454-0002 AT LEAST 48 HOURS IN ADVANCE FOR THE LOCATIONS OF ALL UNDERGROUND WIRES, CABLES, CONDUITS, PIPES, MANHOLES, VALVES OR OTHER BURIED STRUCTURES BEFORE DIGGING. THE CONTRACTOR SHALL REPAIR OR REPLACE THE ABOVE WHEN DAMAGED DURING CONSTRUCTION AT NO COST TO THE OWNER.

EXISTING CONDITIONS

C1-0

Plotted: 05 /25 / 2018 11:52 AM W:\2016\16101A\CADD DATA\CIVIL\ dwg Sheet Files\C1-1 EXISTING CONDITIONS

Preliminary Plat: CROW RIVER HEIGHTS WEST FUTURE ADDITIONS

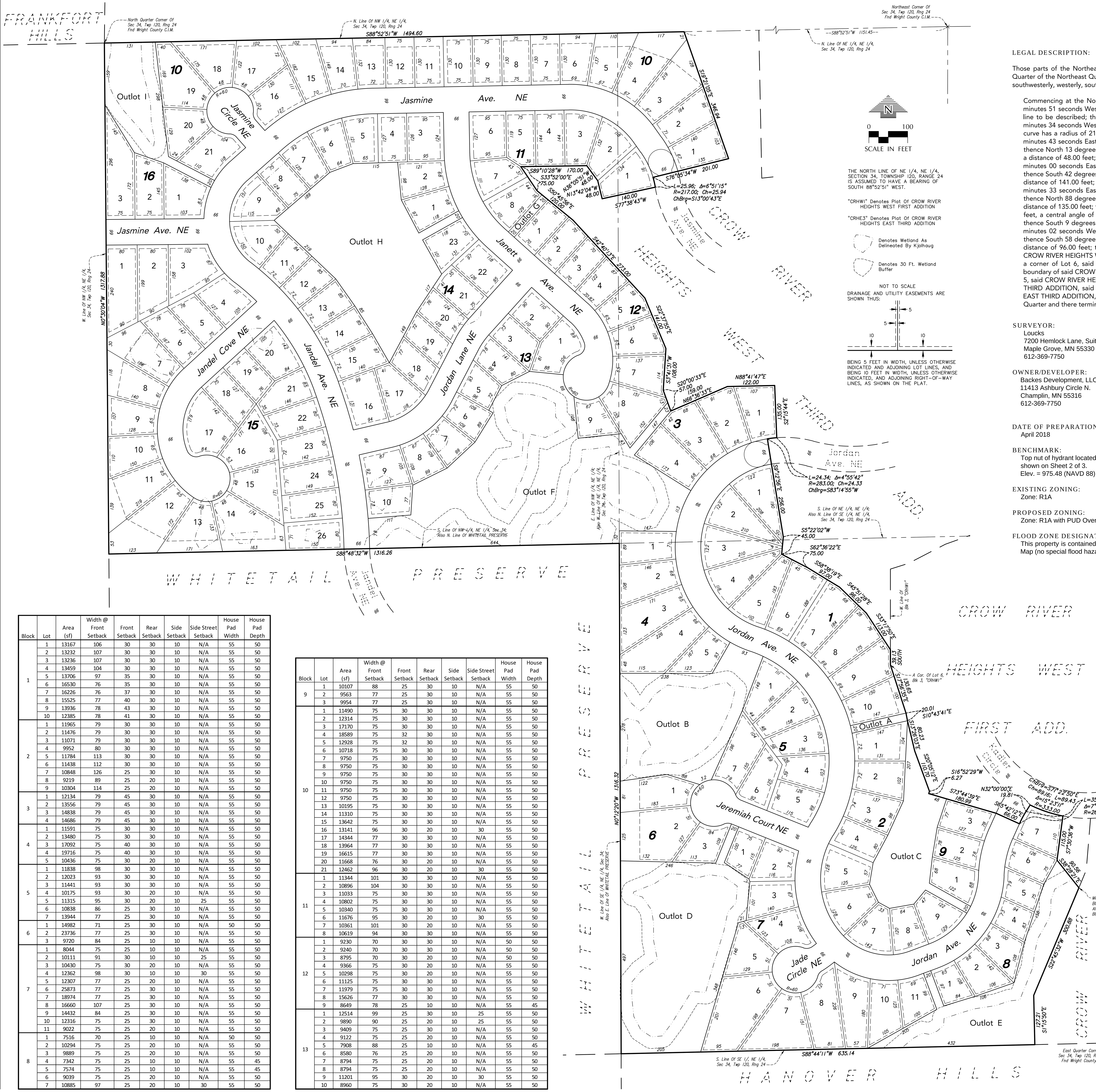

PRELIMINARY PLAT GENERAL NOTES

LEGAL DESCRIPTION:

Those parts of the Northeast Quarter of the Northeast Quarter, the Northwest Quarter of the Northeast Quarter, and the Southeast Quarter of the Northeast Quarter of Section 34, Township 120 North, Range 24 West, Wright County, Minnesota, lying westerly, northerly, southwesterly, westerly, southwesterly and westerly of the following described line:

Commencing at the Northeast corner of said Northeast Quarter; thence westerly, on an assumed bearing of South 88 degrees 52 minutes 51 seconds West, along the north line of said Northeast Quarter, a distance of 1151.45 feet to the point of beginning of the line to be described; thence South 19 degrees 21 minutes 05 seconds East a distance of 346.94 feet; thence South 76 degree 05 minutes 34 seconds West a distance of 201.00 feet; thence southerly 25.96 feet along a non-tangential curve concave to the west, said curve has a radius of 217.00 feet, a central angle of 6 degrees 51 minutes 15 seconds, and a chord that bears South 13 degrees 00 minutes 43 seconds East; thence South 77 degrees 38 minutes 43 seconds West, not tangent to said curve a distance of 140.00 feet; thence North 13 degrees 42 minutes 04 seconds West a distance of 48.00 feet; thence North 36 degrees 05 minutes 51 seconds West a distance of 48.00 feet; thence South 89 degrees 10 minutes 28 seconds West a distance of 170.00 feet; thence South 33 degrees 52 minutes 00 seconds East a distance of 75.00 feet; thence South 50 degrees 45 minutes 56 seconds East a distance of 120.00 feet; thence South 42 degrees 40 minutes 13 seconds East a distance of 273.00 feet; thence South 22 degrees 37 minutes 55 seconds East a distance of 141.00 feet; thence South 3 degrees 41 minutes 31 seconds West a distance of 108.00 feet; thence South 20 degrees 00 minutes 33 seconds East a distance of 57.00 feet; thence North 66 degrees 36 minutes 33 seconds East a distance of 159.00 feet; thence North 88 degrees 41 minutes 47 seconds East a distance of 122.00 feet; thence South 2 degrees 15 minutes 44 seconds East a distance of 135.00 feet; thence westerly 24.34 feet along a non-tangential curve concave to the south, said curve has a radius of 283.00 feet, a central angle of 4 degrees 55 minutes 42 seconds, and a chord that bears South 83 degrees 14 minutes 55 seconds West; thence South 9 degrees 12 minutes 56 seconds East, not tangent to said curve a distance of 256.00 feet; thence South 5 degrees 22 minutes 02 seconds West a distance of 45.00 feet; thence South 62 degrees 36 minutes 22 seconds East a distance of 75.00 feet; thence South 58 degrees 38 minutes 19 seconds East a distance of 97.00 feet; thence South 45 degrees 51 minutes 28 seconds East a distance of 96.00 feet; thence South 33 degrees 17 minutes 50 seconds East a distance of 113.00 feet to the west line of Block 3, CROW RIVER HEIGHTS WEST FIRST ADDITION, Wright County, Minnesota; thence on a bearing of SOUTH, a distance of 39.13 feet to a corner of Lot 6, said Block 3; thence southeasterly, northeasterly, easterly, southerly and southeasterly, along the southwesterly boundary of said CROW RIVER HEIGHTS WEST FIRST ADDITION, a distance of 945.55 feet to the most southerly corner of Lot 1, Block 5, said CROW RIVER HEIGHTS WEST FIRST ADDITION, which corner is also on the west line of Block 4, CROW RIVER HEIGHTS EAST THIRD ADDITION, said Wright County; thence southwesterly and southerly, along the westerly line of said CROW RIVER HEIGHTS EAST THIRD ADDITION, and said line extended, a distance of 428.09 feet, to the south line of said Southeast Quarter of the Northeast Quarter and there terminating.

SURVEYOR:
Loucks
7200 Hemlock Lane, Suite 300
Maple Grove, MN 55330
612-369-7750

OWNER/DEVELOPER:
Backes Development, LLC
11413 Ashbury Circle N.
Champlin, MN 55316
612-369-7750

DATE OF PREPARATION:
April 2018

BENCHMARK:
Top nut of hydrant located in cul-de-sac of Jasmine Court as shown on Sheet 2 of 3.
Elev. = 975.48 (NAVD 88)

EXISTING ZONING:
Zone: R1A

PROPOSED ZONING:
Zone: R1A with PUD Overlay

FLOOD ZONE DESIGNATION:
This property is contained in an unprinted Flood Insurance Rate Map (no special flood hazard areas).

AREAS:

Proposed Lots =	1,902,756 SF or 43.68 Acres
Proposed Outlot A =	2,938 SF or 0.07 Acres
Proposed Outlot B =	87,377 SF or 2.00 Acres
Proposed Outlot C =	45,233 SF or 1.04 Acres
Proposed Outlot D =	137,323 SF or 3.15 Acres
Proposed Outlot E =	68,170 SF or 1.56 Acres
Proposed Outlot F =	210,356 SF or 4.83 Acres
Proposed Outlot G =	2,594 SF or 0.06 Acres
Proposed Outlot H =	113,041 SF or 2.60 Acres
Proposed Outlot I =	40,859 SF or 0.94 Acres
Proposed R.O.W. =	524,799 SF or 12.05 Acres
Total Property =	3,135,448 SF or 71.98 Aces

PROPOSED BUILDING SETBACKS:

Front	=	25 - 45 Feet Minimum, Varies
Side (Corner)	=	25/30 Feet Minimum, Varies
Side (Interior)	=	10 Feet
Rear	=	10/20/30 Feet Minimum, Varies

PROPOSED LOT DATA:
No. Lots = 159
Minimum Lot Size = 7,342 SF
Average Lot Size = 11,968 SF

WETLANDS:
Wetland Area = 267,156 SF or 6.13 Acres

Block	Lot	Area (sf)	Width @ Front Setback	Front Setback	Rear Setback	Side Setback	Side Street Setback	House Pad Width	House Pad Depth
1	1	13167	106	30	30	10	N/A	55	50
	2	13232	107	30	30	10	N/A	55	50
	3	13236	107	30	30	10	N/A	55	50
	4	13459	104	30	30	10	N/A	55	50
	5	13706	97	35	30	10	N/A	55	50
	6	16530	76	35	30	10	N/A	55	50
	7	16226	76	37	30	10	N/A	55	50
	8	15525	77	40	30	10	N/A	55	50
	9	13936	78	43	30	10	N/A	55	50
	10	12385	78	41	30	10	N/A	55	50
2	1	11965	79	30	30	10	N/A	55	50
	2	11476	79	30	30	10	N/A	55	50
	3	11071	79	30	30	10	N/A	55	50
	4	9952	80	30	30	10	N/A	55	50
	5	11784	113	30	30	10	N/A	55	50
	6	11438	112	30	30	10	N/A	55	50
	7	10848	126	25	30	10	N/A	55	50
	8	9219	89	25	20	10	N/A	55	50
	9	10304	114	25	20	10	N/A	55	50
3	1	12134	79	45	30	10	N/A	55	50
	2	13556	79	45	30	10	N/A	55	50
	3	14838	79	45	30	10	N/A	55	50
	4	14686	79	45	30	10	N/A	55	50
4	1	11591	75	30	30	10	N/A	55	50
	2	13480	75	30	30	10	N/A	55	50
	3	17092	75	40	30	10	N/A	55	50
	4	19716	75	40	30	10	N/A	55	50
	5	10436	75	30	20	10	N/A	55	50
5	1	11838	98	30	30	10	N/A	55	50
	2	12023	93	30	30	10	N/A	55	50
	3	11441	93	30	30	10	N/A	55	50
	4	10175	93	30	20	10	N/A	55	50
	5	11315	95	30	20	10	25	55	50
	6	10838	86	25	30	10	N/A	55	50
	7	13944	77	25	30	10	N/A	55	50
6	1	14982	71	25	30	10	N/A	50	50
	2	23736	77	25	30	10	N/A	55	50
	3	9720	84	25	10	10	N/A	55	50
7	1	8044	75	25	10	10	N/A	55	50
	2	10111	91	30	10	10	25	55	50
	3	10430	75	30	20	10	N/A	55	50
	4	12362	98	30	10	10	30	55	50
	5	12307	77	25	20	10	N/A	55	50
	6	25873	77	25	30	10	N/A	55	50
	7	18974	77	25	30	10	N/A	55	50
	8	16660	107	25	30	10	N/A	55	50
	9	14432	84	25	30	10	N/A	55	50
	10	12316	75	25	30	10	N/A	55	50
	11	9022	75	25	20	10	N/A	55	50
8	1	7516	70	25	10	10	N/A	50	50
	2	10294	75	25	20	10	N/A	55	50
	3	9889	75	25	20	10	N/A	55	50
	4	7342	75	25	10	10	N/A	55	45
	5	7574	75	25	10	10	N/A	55	45
	6	9039	75	25	20	10	N/A	55	50
	7	10885	97	25	20	10	30	55	50

Block	Lot	Area (sf)	Width @ Front Setback	Front Setback	Rear Setback	Side Setback	Side Street Setback	House Pad Width	House Pad Depth
9	1	10107	88	25	30	10	N/A	55	50
	2	9563	77	25	30	10	N/A	55	50
	3	9954	77	25	30	10	N/A	55	50
10	1	11490	75	30	30	10	N/A	55	50
	2	12314	75	30	30	10	N/A	55	50
	3	17170	75	30	30	10	N/A	55	50
	4	18589	75	32	30	10	N/A	55	50
	5	12928	75	32	30	10	N/A	55	50
	6	10718	75	30	30	10	N/A	55	50
	7	9750	75	30	30	10	N/A	55	50
	8	9750	75	30	30	10	N/A	55	50
	9	9750	75	30	30	10	N/A	55	50
	10	9750	75	30	30	10	N/A	55	50
	11	9750	75	30	30	10	N/A	55	50
	12	9750	75	30	30	10	N/A	55	50
	13	10195	75	30	30	10	N/A	55	50
	14	11310	75	30	30	10	N/A	55	50
	15	13642	75	30	30	10	N/A	55	50
	16	13141	96	30	20	10	30	55	50
	17	14344	77	30	30	10	N/A	55	50
	18	13964	77	30	30	10	N/A	55	50
	19	16615	77	30	30	10	N/A	55	50
	20	11668	76	30	20	10	N/A	55	50
	21	12462	96	30	20	10	30	55	50
11	1	11344	101	30	30	10	N/A	55	50
	2	10896	104	30	30	10	N/A	55	50
	3	11033	75	30	30	10	N/A	55	50
	4	10802	75	30	30	10	N/A	55	50
	5	10340	75	30	30	10	N/A	55	50
	6	11676	95	30	20	10	30	55	50
	7	10361	101	30	20	10	N/A	55	50
	8	10619	94	30	30	10	N/A	55	50
12	1	9230	70	30	30	10	N/A	50	50
	2	9240	70	30	30	10	N/A	50	50
	3	8795	70	30	20	10	N/A	50	50
	4	9366	75	30	20	10	N/A	55	50
	5	10298	75	30	20	10	N/A	55	50
	6	11125	75	30	30	10	N/A	55	50
	7	11979	75	30	30	10	N/A	55	50
	8	15626	77	30	30	10	N/A	55	50
	9	8649	78	25	10	10	N/A	55	45
13	1	12514	99	25	30	10	25	55	50
	2	9890	90	25	20	10	25	55	50
	3	9409	75	25	30	10	N/A	55	50
	4	9122	75	25	20	10	N/A	55	50
	5	7908	88	25	10	10	N/A	55	45
	6	8580	76	25	20	10	N/A	55	50
	7	8794	75	25	20	10	N/A	55	50
	8	8794	75	25	20	10	N/A	55	50
	9	11201	95	30	20	10	30	55	50
	10	8960	75	30	20	10	N/A	55	50

Block	Lot	Area (sf)	Width @ Front Setback	Front Setback	Rear Setback	Side Setback	Side Street Setback	House Pad Width	House Pad Depth
14	1	9940	75	30	20	10	N/A	55	50
	2	10118	75	30	20	10	N/A	55	50
	3	11879	95	30	30	10	30	55	50
	4	9461	75	30	30	10	N/A	55	50
	5	9899	87	30	20	10	N/A	55	50
	6	9757	88	30	20	10	N/A	55	50
	7	9778	86	30	20	10	N/A	55	50
	8	9315	75	30	20	10	N/A	55	50
	9	11959	136	30	20	10	N/A	55	50
	10	11855	137	30	20	10	N/A	55	50
	11	9130	75	30	20	10	N/A	55	50
	12	9406	75	30	20	10	N/A	55	50
	13	9734	75	30	20	10	N/A	55	50
	14	9951	75	30	30	10	N/A	55	50
	15	10611	75	30	30	10	N/A	55	50
	16	13145	95	25	30	10	30	55	50
	17	10807	106	25	30	10	N/A	55	50
	18	9446	75	25	20	10	N/A	55	50
	19	8773	70	25	20	10	N/A	50	50
	20	9199	75	25	20	10	N/A	55	50
	21	9531	75	25	30	10	N/A	55	50
	22	11622	95	25	30	10	30	55	50
	23	10447	75	30	20	10	N/A	55	50
15	1	17544	80	30	30	10	N/A	55	50
	2	14281	80	30	30	10	N/A	55	50
	3	15284	114	30	30	10	30	55	50
	4	11671	95	30	20	10	30	55	50
	5	10254	75	30	30	10	N/A	55	50
	6	11818	75	30	30	10	N/A	55	50
	7	16244	70	30	30	10	N/A	50	50
	8	13483	71	30	30	10	N/A	50	50
	9	11222	75	30	30	10	N/A	55	50
	10	11777	75	30	30	10	N/A	55	50
	11	16767	75	30	30	10	N/A	55	50
	12	21468	75	30	30	10	N/A	55	50
	13	14738	77	30	30	10	N/A	55	50
	14	19994	77	30	30	10	N/A	55	50
	15	14730	77	30	30	10	N/A	55	50
	16	15387	76	30	30	10	N/A	55	50
	17	16473	166	30	25	10	30	55	50
	18	10093	75	30	30	10	N/A	55	50
	19	9134	75	30	20	10	N/A	55	50
	20	12387	102	30	20	10	N/A	55	50
	21	10312	81	30	30	10	N/A	55	50
	22	10478	78	30	30	10	N/A	55	50
	23	10328	78	30	30	10	N/A	55	50
	24	11006	78	30	30	10	N/A	55	50
	25	11356	78	30	30	10	N/A	55	50
	26	11394	78	30	30	10	N/A	55	50
16	1	12712	106	30	20	10	30	55	50
	2	11877	75	30	30	10	N/A	55	50
	3	17538	75	30	30	10	N/A	55	50

CROW RIVER HEIGHTS WEST FUTURE ADD.

HANOVER, MN

BACKES COMPANIES
11413 ASHBURY CIRCLE N.
CHAMPLIN, MN 55316
PHONE: (612) 369-7750
FAX (612) 566-1525

LOUCKS
PLANNING
CIVIL ENGINEERING
LAND SURVEYING
LANDSCAPE ARCHITECTURE
ENVIRONMENTAL
7200 Hemlock Lane, Suite 300
Maple Grove, MN 55369
763.424.5505
www.loucksinc.com

CADD QUALIFICATION

CADD files prepared by the Consultant for this project are instruments of the Consultant professional services for use solely with respect to this project. These CADD files shall not be used on other projects, for additions to this project, or for completion of this project by others without written approval by the Consultant. With the Consultant's approval, others may be permitted to obtain copies of the CADD drawing files for information and reference only. All intentional or unintentional revisions, additions, or deletions to these CADD files shall be made at the full risk of that party making such revisions, additions or deletions and that party shall hold harmless and indemnify the Consultant from any & all responsibilities, claims, and liabilities.

SUBMITTAL/REVISIONS

04/20/18	CITY SUBMITTAL
05/24/18	CITY COMMENTS

PROFESSIONAL SIGNATURE

I hereby certify that this survey, plan or report was prepared by me or under my direct supervision and that I am a duly Licensed Land Surveyor under the laws of the State of Minnesota.

Henry D. Nelson
Henry D. Nelson - PLS

License No. 17255
Date 4/2/18

QUALITY CONTROL

Loucks Project No.	16-101.AA
Project Lead	HDN
Drawn By	SFM
Checked By	HDN
Field Crew	DP/GF

SHEET INDEX

C0-1 COVER SHEET
C1-1 EXISTING CONDITIONS
C1-2 PRELIMINARY PLAT
C2-0 - C2-2 SITE PLAN
C3-0 - C3-2 GRADING PLAN
C3-3 - C3-5 SWPPP PLAN & NOTES
C4-0 - C4-2 UTILITY PLAN
C8-1 - C8-2 DETAILS
L0-1 - L0-3 TREE PRESERVATION
L0-4 TREE INVENTORY
L1-1 - L1-2 LANDSCAPE PLANS
L2-1 LANDSCAPE DETAILS

PRELIMINARY PLAT

C1-2

Plotted: 05 /25 / 2018 11:26 AM W:\2016\16101A\CADD DATA\SURVEY_dwg Sheet Files\P16101A-PrePlat

N

0 100 200

SCALE IN FEET

EXISTING	CIVIL LEGEND	PROPOSED
	SANITARY MANHOLE	
	STORM MANHOLE	
	CATCH BASIN	
	CULVERT	
	HYDRANT	
	GATEVALVE	
	POST INDICATOR VALVE	
	LIGHT POLE	
	POWER POLE	
	SIGN	
	BENCHMARK	
	SOIL BORINGS	
	WATER MANHOLE	
	TELEPHONE MANHOLE	
	UTILITY MANHOLE	
	ELECTRIC MANHOLE	
	WATER SERVICE	
	SANITARY SERVICE	
	HANDICAP PARKING	
	DIRECTION OF FLOW	
	SPOT ELEVATION	
	CONTOURS	
	SANITARY SEWER	
	STORM SEWER	
	WATERMAIN	
	FORCEMAIN	
	DRAINTILE	
	SILT FENCE	
	CURB & GUTTER	
	RETAINING WALL	
	TREELINE	
	EASEMENT LINE	
	SETBACK LINE	
	FENCE LINE	
	UNDERGROUND TELE	
	UNDERGROUND GAS	
	OVERHEAD UTILITY	

CROW RIVER HEIGHTS WEST FUTURE ADD.

HANOVER, MN

BACKES COMPANIES
11413 ASHBURY CIRCLE N.
CHAMPLIN, MN 55316
PHONE: (612) 369-7750
FAX (612) 566-1525

LOUCKS
PLANNING
CIVIL ENGINEERING
LAND SURVEYING
LANDSCAPE ARCHITECTURE
ENVIRONMENTAL
7200 Hemlock Lane, Suite 300
Maple Grove, MN 55369
763.424.5505
www.loucksinc.com

WETLANDS

ID #	Area sf	Impact sf	Mitigation sf
1	10,783	0	0
2A	1,712	1,712	3,424
2B	1,600	1,600	3,200
2C	4,153	4,153	8,306
2D	21,766	0	0
2E	40,216	0	0
3	1,276	1,276	2,552
4	18,376	0	0
5	5,981	5,981	11,962
6	39,712	0	0
7	1,014	1,014	2,028
8	2,536	2,536	5,072
10	6,629	6,629	13,258
11	41,815	0	0
12	69,587	0	0

Total Wetland Area = 267,156 sf
Total Wetland Impact = 24,901 sf
Total Mitigation Area= 49,802 sf

CADD QUALIFICATION

CADD files prepared by the Consultant for this project are instruments of the Consultant professional services for use solely with respect to this project. These CADD files shall not be used on other projects, for additions to this project, or for completion of this project by others without written approval by the Consultant. Such written approval shall indicate the party to be permitted to obtain copies of the CADD drawing files for information and reference only. All intentional or unintentional revisions, additions, or deletions to these CADD files shall be made at the full risk of that party making such revisions, additions or deletions and that party shall hold harmless and indemnify the Consultant from any & all responsibilities, claims, and liabilities.

SUBMITTAL/REVISIONS

04/20/18 CITY SUBMITTAL
05/24/18 CITY COMMENTS

PROFESSIONAL SIGNATURE

I hereby certify that this plan, specification, or report was prepared by me or under my direct supervision and that I am a duly Licensed Professional Engineer under the laws of the State of Minnesota.

PRELIMINARY

Licensed Professional Engineer: Tyler W. McLouth - PE
Date: License No. 20383

QUALITY CONTROL

Loucks Project No.	16101A
Project Lead	TWM
Drawn By	ZHW
Checked By	TWM
Review Date	05/24/18

SHEET INDEX

C0-1 ..... COVER SHEET
C1-1 ..... EXISTING CONDITIONS
C1-2 ..... PRELIMINARY PLAT
C2-0 - C2-2 ..... SITE PLAN
C3-0 - C3-2 ..... GRADING PLAN
C3-3 - C3-5 ..... SWPPP PLAN & NOTES
C4-0 - C4-2 ..... UTILITY PLAN
C8-1 - C8-2 ..... DETAILS
L0-1 - L0-3 ..... TREE PRESERVATION
L0-4 ..... TREE INVENTORY
L1-1 - L1-2 ..... LANDSCAPE PLANS
L2-1 ..... LANDSCAPE DETAILS

CALL BEFORE YOU DIG!
Gopher State One Call
TWIN CITY AREA: 651-454-0002
TOLL FREE: 1-800-252-1166

WARNING:

THE CONTRACTOR SHALL BE RESPONSIBLE FOR CALLING FOR LOCATIONS OF ALL EXISTING UTILITIES. THEY SHALL COOPERATE WITH ALL UTILITY COMPANIES IN MAINTAINING THEIR SERVICE AND / OR RELOCATION OF LINES.

THE CONTRACTOR SHALL CONTACT GOPHER STATE ONE CALL AT 651-454-0002 AT LEAST 48 HOURS IN ADVANCE FOR THE LOCATIONS OF ALL UNDERGROUND WIRES, CABLES, CONDUITS, PIPES, MANHOLES, VALVES OR OTHER BURIED STRUCTURES BEFORE DIGGING. THE CONTRACTOR SHALL REPAIR OR REPLACE THE ABOVE WHEN DAMAGED DURING CONSTRUCTION AT NO COST TO THE OWNER.

OVERALL SITE PLAN

C2-0

Plotted: 05 /25 / 2018 11:52 AM W:\2016\16101A\CADD DATA\CIVIL_dwg Sheet Files\C2-1 SITE PLAN

SCALE IN FEET 0 50 100

EXISTING	CIVIL LEGEND	PROPOSED
	SANITARY MANHOLE	
	STORM MANHOLE	
	CATCH BASIN	
	CULVERT	
	HYDRANT	
	GATEVALVE	
	POST INDICATOR VALVE	
	LIGHT POLE	
	POWER POLE	
	SIGN	
	BENCHMARK	
	SOIL BORINGS	
	WATER MANHOLE	
	TELEPHONE MANHOLE	
	UTILITY MANHOLE	
	ELECTRIC MANHOLE	
	WATER SERVICE	
	SANITARY SERVICE	
	HANDICAP PARKING	
	DIRECTION OF FLOW	
	SPOT ELEVATION	
	CONTOURS	
	SANITARY SEWER	
	STORM SEWER	
	WATERMAIN	
	FORCEMAIN	
	DRAINTILE	
	SILT FENCE	
	CURB & GUTTER	
	RETAINING WALL	
	TREELINE	
	EASMENT LINE	
	SETBACK LINE	
	FENCE LINE	
	UNDERGROUND TELE	
	UNDERGROUND GAS	
	OVERHEAD UTILITY	

CALL BEFORE YOU DIG!
Gopher State One Call
TWIN CITY AREA: 651-454-0002
TOLL FREE: 1-800-252-1166

WARNING:

THE CONTRACTOR SHALL BE RESPONSIBLE FOR CALLING FOR LOCATIONS OF ALL EXISTING UTILITIES. THEY SHALL COOPERATE WITH ALL UTILITY COMPANIES IN MAINTAINING THEIR SERVICE AND / OR RELOCATION OF LINES.

THE CONTRACTOR SHALL CONTACT GOPHER STATE ONE CALL AT 651-454-0002 AT LEAST 48 HOURS IN ADVANCE FOR THE LOCATIONS OF ALL UNDERGROUND WIRES, CABLES, CONDUITS, PIPES, MANHOLES, VALVES OR OTHER BURIED STRUCTURES BEFORE DIGGING. THE CONTRACTOR SHALL REPAIR OR REPLACE THE ABOVE WHEN DAMAGED DURING CONSTRUCTION AT NO COST TO THE OWNER.

CROW RIVER HEIGHTS WEST FUTURE ADD.

HANOVER, MN

BACKES COMPANIES
11413 ASHBURY CIRCLE N.
CHAMPLIN, MN 55316
PHONE: (612) 369-7750
FAX (612) 566-1525

LOUCKS
PLANNING
CIVIL ENGINEERING
LAND SURVEYING
LANDSCAPE ARCHITECTURE
ENVIRONMENTAL
7200 Hemlock Lane, Suite 300
Maple Grove, MN 55369
763.424.5505
www.loucksinc.com

CADD QUALIFICATION

CADD files prepared by the Consultant for this project are instruments of the Consultant professional services for use solely with respect to this project. These CADD files shall not be used on other projects, for additions to this project, or for completion of this project by others without written approval by the Consultant. With the Consultant's approval, others may be permitted to obtain copies of the CADD drawing files for information and reference only. All intentional or unintentional revisions, additions, or deletions to these CADD files shall be made at the full risk of that party making such revisions, additions or deletions and that party shall hold harmless and indemnify the Consultant from any & all responsibilities, claims, and liabilities.

SUBMITTAL/REVISIONS

04/20/18	CITY SUBMITTAL
05/24/18	CITY COMMENTS

PROFESSIONAL SIGNATURE

I hereby certify that this plan, specification, or report was prepared by me or under my direct supervision and that I am a duly Licensed Professional Engineer under the laws of the State of Minnesota.

PRELIMINARY

Licensed McLouth - PE
Date: 20383

QUALITY CONTROL

Loucks Project No.	16101A
Project Lead	TWM
Drawn By	ZHW
Checked By	TWM
Review Date	05/24/18

SHEET INDEX

C0-1	COVER SHEET
C1-1	EXISTING CONDITIONS
C1-2	PRELIMINARY PLAT
C2-0 - C2-2	SITE PLAN
C3-0 - C3-2	GRADING PLAN
C3-3 - C3-5	SWPPP PLAN & NOTES
C4-0 - C4-2	UTILITY PLAN
C8-1 - C8-2	DETAILS
L0-1 - L0-3	TREE PRESERVATION
L0-4	TREE INVENTORY
L1-1 - L1-2	LANDSCAPE PLANS
L2-1	LANDSCAPE DETAILS

NORTH SITE PLAN

C2-1

Plotted: 05/25/2018 11:52 AM W:\2016\16101A\CADD DATA\CIVIL\ dwg Sheet File\C2-1 SITE PLAN

EXISTING	CIVIL LEGEND	PROPOSED
	SANITARY MANHOLE	
	STORM MANHOLE	
	CATCH BASIN	
	CULVERT	
	HYDRANT	
	GATEVALVE	
	POST INDICATOR VALVE	
	LIGHT POLE	
	POWER POLE	
	SIGN	
	BENCHMARK	
	SOIL BORINGS	
	WATER MANHOLE	
	TELEPHONE MANHOLE	
	UTILITY MANHOLE	
	ELECTRIC MANHOLE	
	WATER SERVICE	
	SANITARY SERVICE	
	HANDICAP PARKING	
	DIRECTION OF FLOW	
	SPOT ELEVATION	
	CONTOURS	
	SANITARY SEWER	
	STORM SEWER	
	WATERMAIN	
	FORCEMAIN	
	DRAINTILE	
	SILT FENCE	
	CURB & GUTTER	
	RETAINING WALL	
	TREELINE	
	EASEMENT LINE	
	SETBACK LINE	
	FENCE LINE	
	UNDERGROUND TELE	
	UNDERGROUND GAS	
	OVERHEAD UTILITY	

0 50 100
SCALE IN FEET

CALL BEFORE YOU DIG!
Gopher State One Call
TWIN CITY AREA: 651-454-0002
TOLL FREE: 1-800-252-1166

WARNING:

THE CONTRACTOR SHALL BE RESPONSIBLE FOR CALLING FOR LOCATIONS OF ALL EXISTING UTILITIES. THEY SHALL COOPERATE WITH ALL UTILITY COMPANIES IN MAINTAINING THEIR SERVICE AND / OR RELOCATION OF LINES.

THE CONTRACTOR SHALL CONTACT GOPHER STATE ONE CALL AT 651-454-0002 AT LEAST 48 HOURS IN ADVANCE FOR THE LOCATIONS OF ALL UNDERGROUND WIRES, CABLES, CONDUITS, PIPES, MANHOLES, VALVES OR OTHER BURIED STRUCTURES BEFORE DIGGING. THE CONTRACTOR SHALL REPAIR OR REPLACE THE ABOVE WHEN DAMAGED DURING CONSTRUCTION AT NO COST TO THE OWNER.

CROW RIVER HEIGHTS WEST FUTURE ADD.
HANOVER, MN

BACKES COMPANIES
11413 ASHBURY CIRCLE N.
CHAMPLIN, MN 55316
PHONE: (612) 369-7750
FAX (612) 566-1525

LOUCKS
PLANNING
CIVIL ENGINEERING
LAND SURVEYING
LANDSCAPE ARCHITECTURE
ENVIRONMENTAL
7200 Hemlock Lane, Suite 300
Maple Grove, MN 55369
763.424.5505
www.loucksinc.com

CADD QUALIFICATION

CADD files prepared by the Consultant for this project are instruments of the Consultant professional services for use solely with respect to this project. These CADD files shall not be used on other projects, for additions to this project, or for completion of this project by others without written approval by the Consultant. With the Consultant's approval, others may be permitted to obtain copies of the CADD drawing files for information and reference only. All intentional or unintentional revisions, additions, or deletions to these CADD files shall be made at the full risk of that party making such revisions, additions or deletions and that party shall hold harmless and indemnify the Consultant from any & all responsibilities, claims, and liabilities.

SUBMITTAL/REVISIONS

04/20/18	CITY SUBMITTAL
05/24/18	CITY COMMENTS

PROFESSIONAL SIGNATURE

I hereby certify that this plan, specification, or report was prepared by me or under my direct supervision and that I am a duly Licensed Professional Engineer under the laws of the State of Minnesota.

PRELIMINARY

License No. 20383
Date

QUALITY CONTROL

Loucks Project No.	16101A
Project Lead	TWM
Drawn By	ZHW
Checked By	TWM
Review Date	05/24/18

SHEET INDEX

C0-1	COVER SHEET
C1-1	EXISTING CONDITIONS
C1-2	PRELIMINARY PLAT
C2-0 - C2-2	SITE PLAN
C3-0 - C3-2	GRADING PLAN
C3-3 - C3-5	SWPPP PLAN & NOTES
C4-0 - C4-2	UTILITY PLAN
C8-1 - C8-2	DETAILS
L0-1 - L0-3	TREE PRESERVATION
L0-4	TREE INVENTORY
L1-1 - L1-2	LANDSCAPE PLANS
L2-1	LANDSCAPE DETAILS

SOUTH SITE PLAN

C2-2

Plotted: 05 /25 / 2018 11:53 AM W:\2016\16101A\CADD DATA\CIVIL\ dwg Sheet Files\C2-1 SITE PLAN

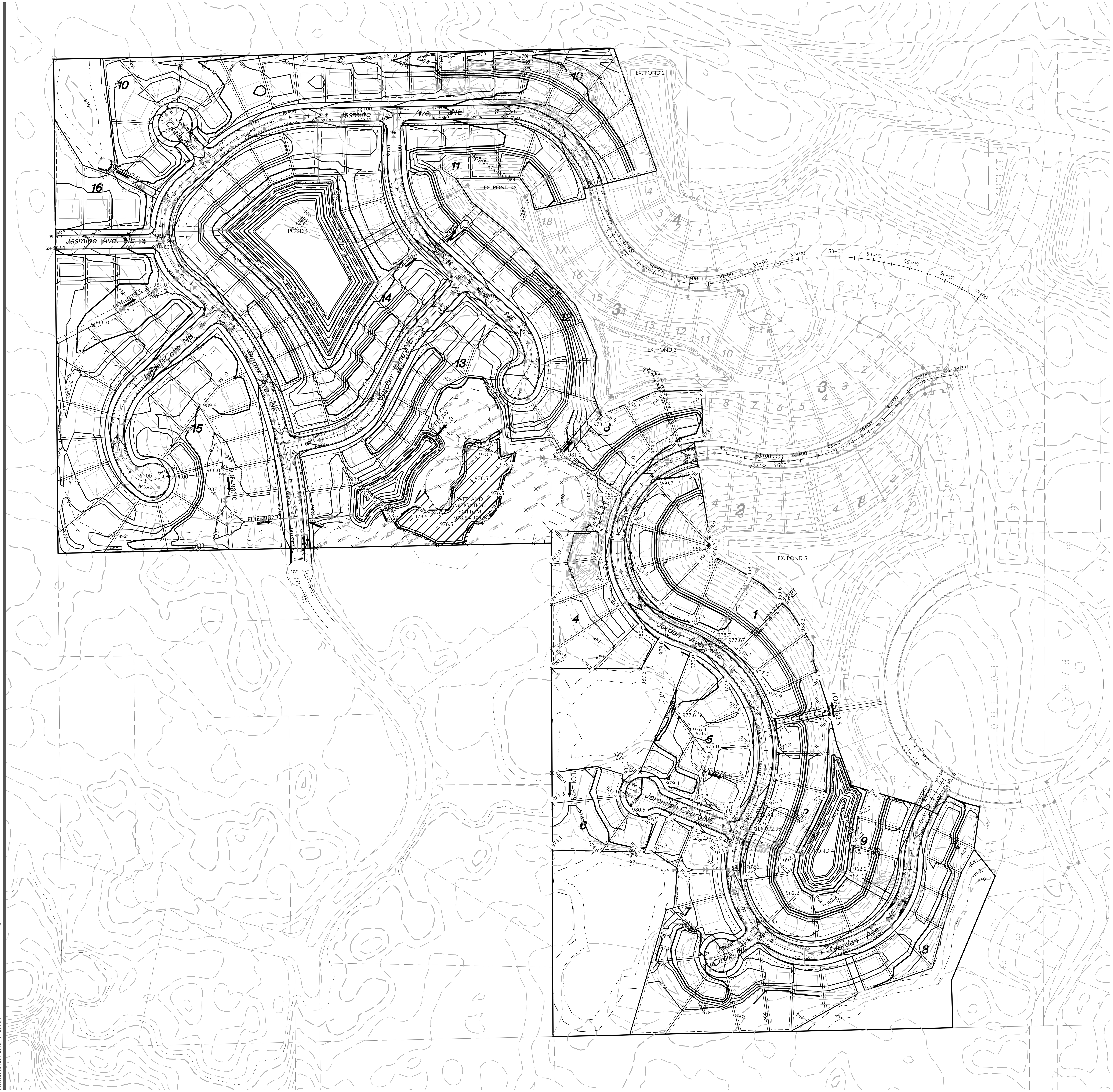

N

0 100 200
SCALE IN FEET

CIVIL LEGEND (EXISTING / PROPOSED)

- SANITARY MANHOLE
- STORM MANHOLE
- CATCH BASIN
- CULVERT
- HYDRANT
- GATEVALVE
- POST INDICATOR VALVE
- LIGHT POLE
- POWER POLE
- SIGN
- BENCHMARK
- SOIL BORINGS
- WATER MANHOLE
- TELEPHONE MANHOLE
- UTILITY MANHOLE
- ELECTRIC MANHOLE
- WATER SERVICE
- SANITARY SERVICE
- HANDICAP PARKING
- DIRECTION OF FLOW
- SPOT ELEVATION
- CONTOURS
- SANITARY SEWER
- STORM SEWER
- WATERMAIN
- FORCEMAIN
- DRAINTILE
- SILT FENCE
- CURB & GUTTER
- RETAINING WALL
- TREELINE
- EASEMENT LINE
- SETBACK LINE
- FENCE LINE
- UNDERGROUND TELE
- UNDERGROUND GAS
- OVERHEAD UTILITY

CROW RIVER HEIGHTS WEST FUTURE ADD.

HANOVER, MN

BACKES COMPANIES
11413 ASHBURY CIRCLE N.
CHAMPLIN, MN 55316
PHONE: (612) 369-7750
FAX (612) 566-1525

LOUCKS
PLANNING
CIVIL ENGINEERING
LAND SURVEYING
LANDSCAPE ARCHITECTURE
ENVIRONMENTAL

7200 Hemlock Lane, Suite 300
Maple Grove, MN 55369
763.424.5505
www.loucksinc.com

CADD QUALIFICATION

CADD files prepared by the Consultant for this project are instruments of the Consultant professional services for use solely with respect to this project. These CADD files shall not be used on other projects, for additions to this project, or for completion of this project by others without written approval by the Consultant. With the Consultant's approval, others may be permitted to obtain copies of the CADD drawing files for information and reference only. All intentional or unintentional revisions, additions, or deletions to these CADD files shall be made at the full risk of that party making such revisions, additions or deletions and that party shall hold harmless and indemnify the Consultant from any & all responsibilities, claims, and liabilities.

SUBMITTAL/REVISIONS

04/20/18	CITY SUBMITTAL
05/24/18	CITY COMMENTS

PROFESSIONAL SIGNATURE

I hereby certify that this plan, specification or report was prepared by me or under my direct supervision and that I am a duly Licensed Professional Engineer under the laws of the State of Minnesota.

PRELIMINARY

License No. ... W. McLouth - PE 20383
Date

QUALITY CONTROL

Loucks Project No.	16101A
Project Lead	TWM
Drawn By	ZHW
Checked By	TWM
Review Date	05/24/18

SHEET INDEX

C0-1	COVER SHEET
C1-1	EXISTING CONDITIONS
C1-2	PRELIMINARY PLAT
C2-0 - C2-2	SITE PLAN
C3-0 - C3-2	GRADING PLAN
C3-3 - C3-5	SWPPP PLAN & NOTES
C4-0 - C4-2	UTILITY PLAN
C8-1 - C8-2	DETAILS
L0-1 - L0-3	TREE PRESERVATION
L0-4	TREE INVENTORY
L1-1 - L1-2	LANDSCAPE PLANS
L2-1	LANDSCAPE DETAILS

CALL BEFORE YOU DIG!
Gopher State One Call
TWIN CITY AREA: 651-454-0002
TOLL FREE: 1-800-252-1166

WARNING:

THE CONTRACTOR SHALL BE RESPONSIBLE FOR CALLING FOR LOCATIONS OF ALL EXISTING UTILITIES. THEY SHALL COOPERATE WITH ALL UTILITY COMPANIES IN MAINTAINING THEIR SERVICE AND / OR RELOCATION OF LINES.

THE CONTRACTOR SHALL CONTACT GOPHER STATE ONE CALL AT 651-454-0002 AT LEAST 48 HOURS IN ADVANCE FOR THE LOCATIONS OF ALL UNDERGROUND WIRES, CABLES, CONDUITS, PIPES, MANHOLES, VALVES OR OTHER BURIED STRUCTURES BEFORE DIGGING. THE CONTRACTOR SHALL REPAIR OR REPLACE THE ABOVE WHEN DAMAGED DURING CONSTRUCTION AT NO COST TO THE OWNER.

OVERALL GRADING PLAN

C3-0

Plotted: 05 / 25 / 2018 11:53 AM W:\2016\16101A\CADD DATA\CIVIL_dwg Sheet Files\C3-1 GRADING PLAN

N

0 50 100

SCALE IN FEET

EXISTING	CIVIL LEGEND	PROPOSED
	SANITARY MANHOLE	
	STORM MANHOLE	
	CATCH BASIN	
	CULVERT	
	HYDRANT	
	GATEVALVE	
	POST INDICATOR VALVE	
	LIGHT POLE	
	POWER POLE	
	SIGN	
	BENCHMARK	
	SOIL BORINGS	
	WATER MANHOLE	
	TELEPHONE MANHOLE	
	UTILITY MANHOLE	
	ELECTRIC MANHOLE	
	WATER SERVICE	
	SANITARY SERVICE	
	HANDICAP PARKING	
	DIRECTION OF FLOW	
	SPOT ELEVATION	
	CONTOURS	
	SANITARY SEWER	
	STORM SEWER	
	WATERMAIN	
	FORCEMAIN	
	DRAINTILE	
	SILT FENCE	
	CURB & GUTTER	
	RETAINING WALL	
	TREELINE	
	EASEMENT LINE	
	SETBACK LINE	
	FENCE LINE	
	UNDERGROUND TELE	
	UNDERGROUND GAS	
	OVERHEAD UTILITY	

CALL BEFORE YOU DIG!

Gopher State One Call

TWIN CITY AREA: 651-454-0002
TOLL FREE: 1-800-252-1166

WARNING:

THE CONTRACTOR SHALL BE RESPONSIBLE FOR CALLING FOR LOCATIONS OF ALL EXISTING UTILITIES. THEY SHALL COOPERATE WITH ALL UTILITY COMPANIES IN MAINTAINING THEIR SERVICE AND / OR RELOCATION OF LINES.

THE CONTRACTOR SHALL CONTACT GOPHER STATE ONE CALL AT 651-454-0002 AT LEAST 48 HOURS IN ADVANCE FOR THE LOCATIONS OF ALL UNDERGROUND WIRES, CABLES, CONDUITS, PIPES, MANHOLES, VALVES OR OTHER BURIED STRUCTURES BEFORE DIGGING. THE CONTRACTOR SHALL REPAIR OR REPLACE THE ABOVE WHEN DAMAGED DURING CONSTRUCTION AT NO COST TO THE OWNER.

CROW RIVER HEIGHTS WEST FUTURE ADD.

HANOVER, MN

BACKES COMPANIES
11413 ASHBURY CIRCLE N.
CHAMPLIN, MN 55316
PHONE: (612) 369-7750
FAX (612) 566-1525

LOUCKS
PLANNING
CIVIL ENGINEERING
LAND SURVEYING
LANDSCAPE ARCHITECTURE
ENVIRONMENTAL
7200 Hemlock Lane, Suite 300
Maple Grove, MN 55369
763.424.5505
www.loucksinc.com

CADD QUALIFICATION

CADD files prepared by the Consultant for this project are instruments of the Consultant's professional services for use solely with respect to this project. These CADD files shall not be used on other projects, for additions to this project, or for completion of this project by others without written approval by the Consultant. With the Consultant's approval, others may be permitted to obtain copies of the CADD drawing files for information and reference only. All intentional or unintentional revisions, additions, or deletions to these CADD files shall be made at the full risk of that party making such revisions, additions or deletions and that party shall hold harmless and indemnify the Consultant from any & all responsibilities, claims, and liabilities.

SUBMITTAL/REVISIONS

04/20/18	CITY SUBMITTAL
05/24/18	CITY COMMENTS

PROFESSIONAL SIGNATURE

I hereby certify that this plan, specification or report was prepared by me or under my direct supervision and that I am a duly Licensed Professional Engineer under the laws of the State of Minnesota.

PRELIMINARY

Licensed Name: Todd W. Mattsson - PE
License No. 20383
Date:

QUALITY CONTROL

Loucks Project No.	16101A
Project Lead	TWM
Drawn By	ZHW
Checked By	TWM
Review Date	05/24/18

SHEET INDEX

C0-1	COVER SHEET
C1-1	EXISTING CONDITIONS
C1-2	PRELIMINARY PLAT
C2-0 - C2-2	SITE PLAN
C3-0 - C3-2	GRADING PLAN
C3-3 - C3-5	SWPPP PLAN & NOTES
C4-0 - C4-2	UTILITY PLAN
C8-1 - C8-2	DETAILS
L0-1 - L0-3	TREE PRESERVATION
L0-4	TREE INVENTORY
L1-1 - L1-2	LANDSCAPE PLANS
L2-1	LANDSCAPE DETAILS

NORTH GRADING PLAN

C3-1

Plotted: 05 / 25 / 2018 11:54 AM W:\2016\16101A\CADD DATA\CIVIL dwg Sheet Files\C3-1 GRADING PLAN

EXISTING	CIVIL LEGEND	PROPOSED
	SANITARY MANHOLE	
	STORM MANHOLE	
	CATCH BASIN	
	CULVERT	
	HYDRANT	
	GATEVALVE	
	POST INDICATOR VALVE	
	LIGHT POLE	
	POWER POLE	
	SIGN	
	BENCHMARK	
	SOIL BORINGS	
	WATER MANHOLE	
	TELEPHONE MANHOLE	
	UTILITY MANHOLE	
	ELECTRIC MANHOLE	
	WATER SERVICE	
	SANITARY SERVICE	
	HANDICAP PARKING	
	DIRECTION OF FLOW	
	SPOT ELEVATION	
	CONTOURS	
	SANITARY SEWER	
	STORM SEWER	
	WATERMAIN	
	FORCEMAIN	
	DRAINTILE	
	SILT FENCE	
	CURB & GUTTER	
	RETAINING WALL	
	TREELINE	
	EASEMENT LINE	
	SETBACK LINE	
	FENCE LINE	
	UNDERGROUND TELE	
	UNDERGROUND GAS	
	OVERHEAD UTILITY	

0 50 100
SCALE IN FEET

CALL BEFORE YOU DIG!
Gopher State One Call
TWIN CITY AREA: 651-454-0002
TOLL FREE: 1-800-252-1166

WARNING:

THE CONTRACTOR SHALL BE RESPONSIBLE FOR CALLING FOR LOCATIONS OF ALL EXISTING UTILITIES. THEY SHALL COOPERATE WITH ALL UTILITY COMPANIES IN MAINTAINING THEIR SERVICE AND / OR RELOCATION OF LINES.

THE CONTRACTOR SHALL CONTACT GOPHER STATE ONE CALL AT 651-454-0002 AT LEAST 48 HOURS IN ADVANCE FOR THE LOCATIONS OF ALL UNDERGROUND WIRES, CABLES, CONDUITS, PIPES, MANHOLES, VALVES OR OTHER BURIED STRUCTURES BEFORE DIGGING. THE CONTRACTOR SHALL REPAIR OR REPLACE THE ABOVE WHEN DAMAGED DURING CONSTRUCTION AT NO COST TO THE OWNER.

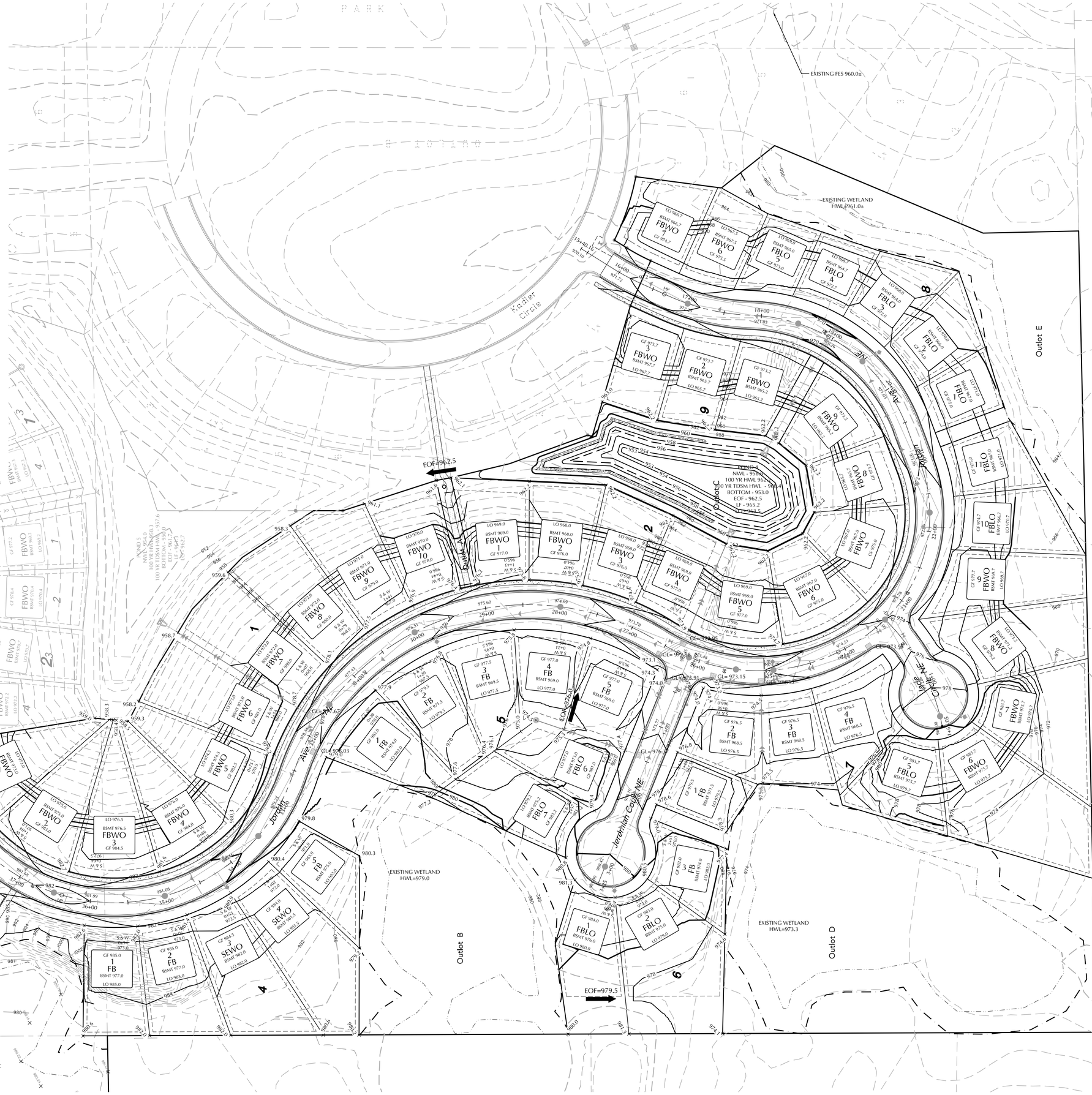

CROW RIVER HEIGHTS WEST FUTURE ADD.

HANOVER, MN

BACKES COMPANIES
11413 ASHBURY CIRCLE N.
CHAMPLIN, MN 55316
PHONE: (612) 369-7750
FAX (612) 566-1525

LOUCKS
PLANNING
CIVIL ENGINEERING
LAND SURVEYING
LANDSCAPE ARCHITECTURE
ENVIRONMENTAL
7200 Hemlock Lane, Suite 300
Maple Grove, MN 55369
763.424.5505
www.loucksinc.com

CADD QUALIFICATION

CADD files prepared by the Consultant for this project are instruments of the Consultant professional services for use solely with respect to this project. These CADD files shall not be used on other projects, for additions to this project, or for completion of this project by others without written approval by the Consultant. With the Consultant's approval, others may be permitted to obtain copies of the CADD drawing files for information and reference only. All intentional or unintentional revisions, additions, or deletions to these CADD files shall be made at the full risk of that party making such revisions, additions or deletions and that party shall hold harmless and indemnify the Consultant from any & all responsibilities, claims, and liabilities.

SUBMITTAL/REVISIONS

04/20/18	CITY SUBMITTAL
05/24/18	CITY COMMENTS

PROFESSIONAL SIGNATURE

I hereby certify that this plan, specification, or report was prepared by me or under my direct supervision and that I am a duly Licensed Professional Engineer under the laws of the State of Minnesota.

PRELIMINARY

License Number 20383
Date

QUALITY CONTROL

Loucks Project No.	16101A
Project Lead	TWM
Drawn By	ZHW
Checked By	TWM
Review Date	05/24/18

SHEET INDEX

C0-1	COVER SHEET
C1-1	EXISTING CONDITIONS
C1-2	PRELIMINARY PLAT
C2-0 - C2-2	SITE PLAN
C3-0 - C3-2	GRADING PLAN
C3-3 - C3-5	SWPPP PLAN & NOTES
C4-0 - C4-2	UTILITY PLAN
C8-1 - C8-2	DETAILS
L0-1 - L0-3	TREE PRESERVATION
L0-4	TREE INVENTORY
L1-1 - L1-2	LANDSCAPE PLANS
L2-1	LANDSCAPE DETAILS

SOUTH GRADING PLAN

C3-2

Plotted: 05/25/2018 11:54 AM W:\2016\16101A\CADD DATA\CIVIL\ dwg Sheet Files\C3-1 GRADING PLAN

N

0 50 100

SCALE IN FEET

EXISTING	CIVIL LEGEND	PROPOSED
	SANITARY MANHOLE	
	STORM MANHOLE	
	CATCH BASIN	
	CULVERT	
	HYDRANT	
	GATEVALVE	
	POST INDICATOR VALVE	
	LIGHT POLE	
	POWER POLE	
	SIGN	
	BENCHMARK	
	SOIL BORINGS	
	WATER MANHOLE	
	TELEPHONE MANHOLE	
	UTILITY MANHOLE	
	ELECTRIC MANHOLE	
	WATER SERVICE	
	SANITARY SERVICE	
	HANDICAP PARKING	
	DIRECTION OF FLOW	
	SPOT ELEVATION	
	CONTOURS	
	SANITARY SEWER	
	STORM SEWER	
	WATERMAIN	
	FORCEMAIN	
	DRAINTILE	
	SILT FENCE	
	CURB & GUTTER	
	RETAINING WALL	
	TREELINE	
	EASEMENT LINE	
	SETBACK LINE	
	FENCE LINE	
	UNDERGROUND TELE	
	UNDERGROUND GAS	
	OVERHEAD UTILITY	

SITE PLAN LEGEND

- SILT FENCE
- BIOROLL
- INLET PROTECTION
- EXISTING DRAINAGE PATTERN
- PROPOSED DRAINAGE PATTERN
- ROCK CONSTRUCTION ENTRANCE
- WOODFIBER BLANKET

CALL BEFORE YOU DIG!

Gopher State One Call

TWIN CITY AREA: 651-454-0002
TOLL FREE: 1-800-252-1166

WARNING:

THE CONTRACTOR SHALL BE RESPONSIBLE FOR CALLING FOR LOCATIONS OF ALL EXISTING UTILITIES. THEY SHALL COOPERATE WITH ALL UTILITY COMPANIES IN MAINTAINING THEIR SERVICE AND / OR RELOCATION OF LINES.

THE CONTRACTOR SHALL CONTACT GOPHER STATE ONE CALL AT 651-454-0002 AT LEAST 48 HOURS IN ADVANCE FOR THE LOCATIONS OF ALL UNDERGROUND WIRES, CABLES, CONDUITS, PIPES, MANHOLES, VALVES OR OTHER BURIED STRUCTURES BEFORE DIGGING. THE CONTRACTOR SHALL REPAIR OR REPLACE THE ABOVE WHEN DAMAGED DURING CONSTRUCTION AT NO COST TO THE OWNER.

CROW RIVER HEIGHTS WEST FUTURE ADD.

HANOVER, MN

BACKES COMPANIES
11413 ASHBURY CIRCLE N.
CHAMPLIN, MN 55316
PHONE: (612) 369-7750
FAX (612) 566-1525

LOUCKS
PLANNING
CIVIL ENGINEERING
LAND SURVEYING
LANDSCAPE ARCHITECTURE
ENVIRONMENTAL
7200 Hemlock Lane, Suite 300
Maple Grove, MN 55369
763.424.5505
www.loucksinc.com

CADD QUALIFICATION

CADD files prepared by the Consultant for this project are instruments of the Consultant's professional services for use solely with respect to this project. These CADD files shall not be used on other projects, for additions to this project, or for completion of this project by others without written approval by the Consultant. Only the hard copies of the CADD drawing files are permitted to obtain copies of the CADD drawing files for information and reference only. All intentional or unintentional revisions, additions, or deletions to these CADD files shall be made at the full risk of that party making such revisions, additions or deletions and that party shall hold harmless and indemnify the Consultant from any & all responsibilities, claims, and liabilities.

SUBMITTAL/REVISIONS

04/20/18	CITY SUBMITTAL
05/24/18	CITY COMMENTS

PROFESSIONAL SIGNATURE

I hereby certify that this plan, specification, or report was prepared by me or under my direct supervision and that I am a duly Licensed Professional Engineer under the laws of the State of Minnesota.

PRELIMINARY

Licensed Name: Tyler W. McLouth - PE
Date: License No. 20383

QUALITY CONTROL

Loucks Project No.	16101A
Project Lead	TWM
Drawn By	ZHW
Checked By	TWM
Review Date	05/24/18

SHEET INDEX

C0-1	COVER SHEET
C1-1	EXISTING CONDITIONS
C1-2	PRELIMINARY PLAT
C2-0 - C2-2	SITE PLAN
C3-0 - C3-2	GRADING PLAN
C3-3 - C3-5	SWPPP PLAN & NOTES
C4-0 - C4-2	UTILITY PLAN
C8-1 - C8-2	DETAILS
L0-1 - L0-3	TREE PRESERVATION
L0-4	TREE INVENTORY
L1-1 - L1-2	LANDSCAPE PLANS
L2-1	LANDSCAPE DETAILS

NORTH SWPPP

C3-3

Plotted: 05 /25 / 2018 11:55 AM W:\2016\16101A\CADD DATA\CIVIL\ .dwg Sheet Files\C-3 SWPPP

EXISTING	CIVIL LEGEND	PROPOSED
	SANITARY MANHOLE	
	STORM MANHOLE	
	CATCH BASIN	
	CULVERT	
	HYDRANT	
	GATEVALVE	
	POST INDICATOR VALVE	
	LIGHT POLE	
	POWER POLE	
	SIGN	
	BENCHMARK	
	SOIL BORINGS	
	WATER MANHOLE	
	TELEPHONE MANHOLE	
	UTILITY MANHOLE	
	ELECTRIC MANHOLE	
	WATER SERVICE	
	SANITARY SERVICE	
	HANDICAP PARKING	
	DIRECTION OF FLOW	
	SPOT ELEVATION	
	CONTOURS	
	SANITARY SEWER	
	STORM SEWER	
	WATERMAIN	
	FORCEMAIN	
	DRAINTILE	
	SILT FENCE	
	CURB & GUTTER	
	RETAINING WALL	
	TREELINE	
	EASEMENT LINE	
	SETBACK LINE	
	FENCE LINE	
	UNDERGROUND TELE	
	UNDERGROUND GAS	
	OVERHEAD UTILITY	

0 50 100
SCALE IN FEET

SITE PLAN LEGEND

- SILT FENCE
- BIOROLL
- INLET PROTECTION
- EXISTING DRAINAGE PATTERN
- PROPOSED DRAINAGE PATTERN
- ROCK CONSTRUCTION ENTRANCE
- WOODFIBER BLANKET

CALL BEFORE YOU DIG!

Gopher State One Call

TWIN CITY AREA: 651-454-0002
TOLL FREE: 1-800-252-1166

WARNING:

THE CONTRACTOR SHALL BE RESPONSIBLE FOR CALLING FOR LOCATIONS OF ALL EXISTING UTILITIES. THEY SHALL COOPERATE WITH ALL UTILITY COMPANIES IN MAINTAINING THEIR SERVICE AND / OR RELOCATION OF LINES.

THE CONTRACTOR SHALL CONTACT GOPHER STATE ONE CALL AT 651-454-0002 AT LEAST 48 HOURS IN ADVANCE FOR THE LOCATIONS OF ALL UNDERGROUND WIRES, CABLES, CONDUITS, PIPES, MANHOLES, VALVES OR OTHER BURIED STRUCTURES BEFORE DIGGING. THE CONTRACTOR SHALL REPAIR OR REPLACE THE ABOVE WHEN DAMAGED DURING CONSTRUCTION AT NO COST TO THE OWNER.

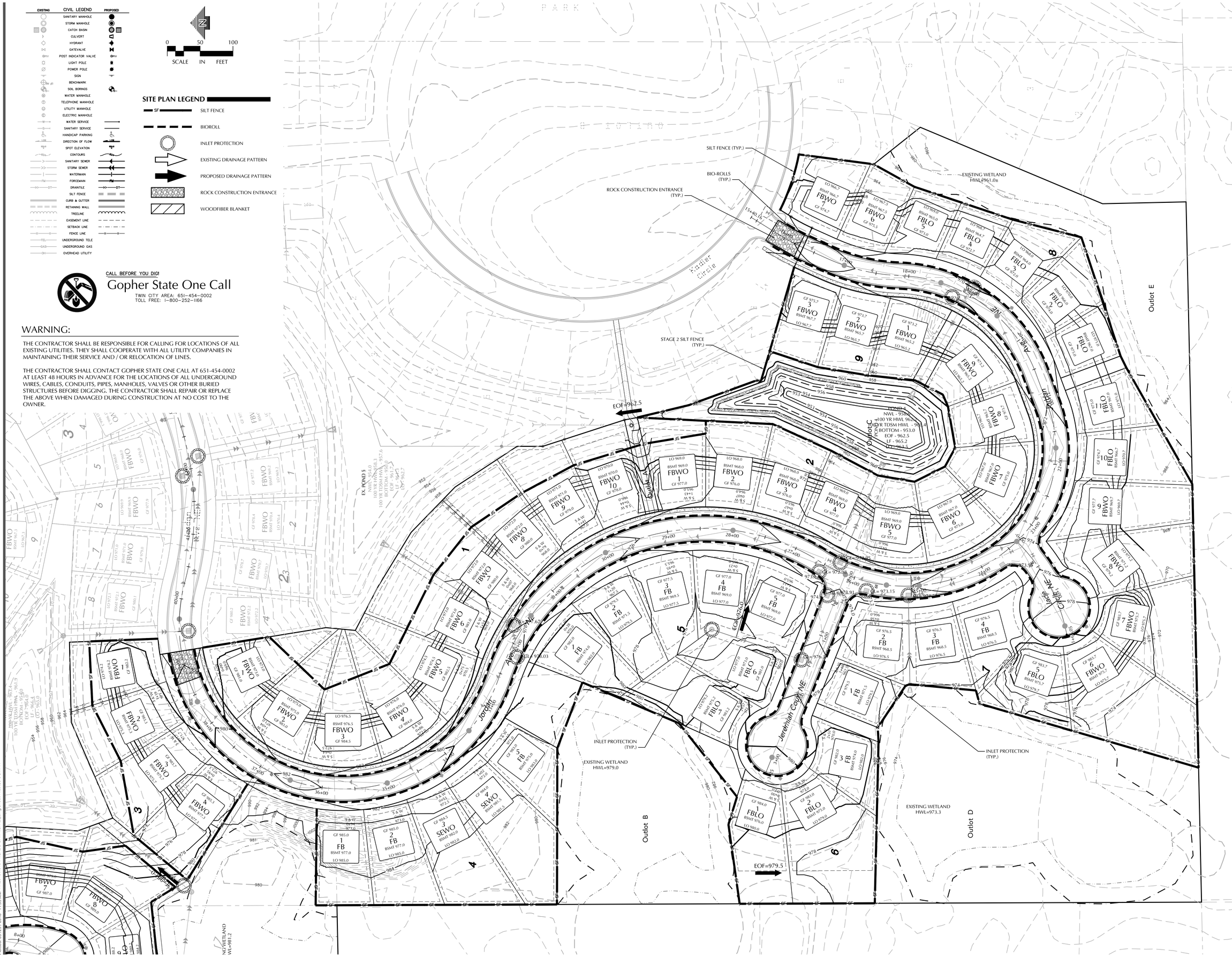

CROW RIVER HEIGHTS WEST FUTURE ADD.

HANOVER, MN

BACKES COMPANIES
11413 ASHBURY CIRCLE N.
CHAMPLIN, MN 55316
PHONE: (612) 369-7750
FAX (612) 566-1525

LOUCKS
PLANNING
CIVIL ENGINEERING
LAND SURVEYING
LANDSCAPE ARCHITECTURE
ENVIRONMENTAL
7200 Hemlock Lane, Suite 300
Maple Grove, MN 55369
763.424.5505
www.loucksinc.com

CADD QUALIFICATION

CADD files prepared by the Consultant for this project are instruments of the Consultant professional services for use solely with respect to this project. These CADD files shall not be used on other projects, for additions to this project, or for completion of this project by others without written approval by the Consultant. With the Consultant's approval, others may be permitted to obtain copies of the CADD drawing files for information and reference only. All intentional or unintentional revisions, additions, or deletions to these CADD files shall be made at the full risk of that party making such revisions, additions or deletions and that party shall hold harmless and indemnify the Consultant from any & all responsibilities, claims, and liabilities.

SUBMITTAL/REVISIONS

04/20/18	CITY SUBMITTAL
05/24/18	CITY COMMENTS

PROFESSIONAL SIGNATURE

I hereby certify that this plan, specification or report was prepared by me or under my direct supervision and that I am a duly Licensed Professional Engineer under the laws of the State of Minnesota.

PRELIMINARY

License or Cert. No. 20383
Date

QUALITY CONTROL

Loucks Project No.	16101A
Project Lead	TWM
Drawn By	ZHW
Checked By	TWM
Review Date	05/24/18

SHEET INDEX

C0-1	COVER SHEET
C1-1	EXISTING CONDITIONS
C1-2	PRELIMINARY PLAT
C2-0 - C2-2	SITE PLAN
C3-0 - C3-2	GRADING PLAN
C3-3 - C3-5	SWPPP PLAN & NOTES
C4-0 - C4-2	UTILITY PLAN
C8-1 - C8-2	DETAILS
L0-1 - L0-3	TREE PRESERVATION
L0-4	TREE INVENTORY
L1-1 - L1-2	LANDSCAPE PLANS
L2-1	LANDSCAPE DETAILS

SOUTH SWPPP

C3-4

Plotted: 05/25/2018 11:55 AM W:\2016\16101A\CADD DATA\CIVIL dwg Sheet Files\C3-3 SWPPP

SWPPP NOTES

1. PROJECT DESCRIPTION
   THE NATURE OF THIS PROJECT WILL CONSIST OF CONSTRUCTING SINGLE FAMILY RESIDENTIAL LOTS AND HOMES, UTILITIES AND STREETS.

2. SEQUENCING OF MAJOR CONSTRUCTION ACTIVITIES ARE AS FOLLOWS:

1. INSTALL VEHICLE TRACKING BMP
2. INSTALL SILT FENCE AROUND SITE
3. INSTALL PROTECTIVE FENCE AROUND INFILTRATION AREAS
4. CLEAR AND GRUB SITE
5. STRIP AND STOCKPILE TOPSOIL
6. REMOVE PAVEMENTS AND UTILITIES
7. CONSTRUCT STORMWATER MANAGEMENT BASINS
8. INSTALL SILT FENCE AROUND BASINS
9. ROUGH GRADE SITE
10. IMPORT CLEAN FILL FOR REPLACEMENT AND BALANCE
11. INSTALL UTILITIES
12. INSTALL BUILDING FOUNDATIONS
13. INSTALL CURB AND GUTTER
14. INSTALL PAVEMENTS AND WALKS
15. INSTALL SMALL UTILITIES (GAS, PHONE, ELECTRIC, CABLE, ETC.)
16. FINAL GRADE SITE
17. REMOVE ACCUMULATED SEDIMENT FROM BASINS
18. CONSTRUCT INFILTRATION BASIN
19. SEED AND MULCH
20. WHEN ALL CONSTRUCTION ACTIVITY IS COMPLETE AND THE SITE IS STABILIZED, REMOVE SILT FENCE AND RESEED ANY AREAS DISTURBED BY THE REMOVAL.

3. SITE DATA:

AREA OF DISTURBANCE:	±52.313 AC
PRE-CONSTRUCTION IMPERVIOUS AREA:	±0.0 AC
POST-CONSTRUCTION IMPERVIOUS AREA:	±16.6 AC

   GENERAL SOIL TYPE: SEE GEOTECHNICAL REPORT IN SPECIFICATIONS

4. THE LOCATION OF AREAS NOT TO BE DISTURBED MUST BE IDENTIFIED WITH FLAGS, STAKES, SIGNS, SILT FENCE, ETC. BEFORE CONSTRUCTION BEGINS.

5. ALL DISTURBED GROUND LEFT INACTIVE FOR SEVEN (7) OR MORE DAYS SHALL BE STABILIZED BY SEEDING OR SODDING (ONLY AVAILABLE PRIOR TO SEPTEMBER 15) OR BY MULCHING OR COVERING OR OTHER EQUIVALENT CONTROL MEASURE. AT A RATE OF 1.5 TIMES STANDARD SEEDING FINAL STABILIZATION TO BE DONE PER LANDSCAPE PLAN, SEE SHEET L1-1.

6. ON SLOPES 3:1 OR GREATER MAINTAIN SHEET FLOW AND MINIMIZE RILLS AND/OR GULLIES, SLOPE LENGTHS CAN NOT BE GREATER THAN 75 FEET.
   ALL 3:1 SLOPES TO BE STABILIZED WITH EROSION CONTROL BLANKET

7. ALL STORM DRAINS AND INLETS MUST BE PROTECTED UNTIL ALL SOURCES OF POTENTIAL DISCHARGE ARE STABILIZED.

8. TEMPORARY SOIL STOCKPILES MUST HAVE EFFECTIVE SEDIMENT CONTROL AND CAN NOT BE PLACED IN SURFACE WATERS OR STORM WATER CONVEYANCE SYSTEMS. TEMPORARY STOCKPILES WITHOUT SIGNIFICANT AMOUNT OF SILT, CLAY, OR ORGANIC COMPOUNDS ARE EXEMPT EX: CLEAN AGGREGATE STOCK PILES, DEMOLITION CONCRETE STOCKPILES, SAND STOCKPILES.

9. SEDIMENT LADEN WATER MUST BE DISCHARGED TO A SEDIMENTATION BASIN WHENEVER POSSIBLE. IF NOT POSSIBLE, IT MUST BE TREATED WITH THE APPROPRIATE BMP'S.

10. SOLID WASTE MUST BE DISPOSED OF PROPERLY AND MUST COMPLY WITH MPCA DISPOSAL REQUIREMENTS.

11. THE WATERSHED DISTRICT OR THE CITY MAY HAVE REQUIREMENTS FOR INSPECTIONS OR AS-BUILT DRAWINGS VERIFYING PROPER CONSTRUCTION OF THE BMPS.

12. THE OWNER WHO SIGNS THE NPDES PERMIT APPLICATION IS A PERMITTEE AND IS RESPONSIBLE FOR COMPLIANCE WITH ALL TERMS AND CONDITIONS OF THE PERMIT. THE OPERATOR (CONTRACTOR) WHO SIGNS THE NPDES PERMIT APPLICATION IS A PERMITTEE FOR PARTS II.B., PART II.C, PART II.B-F, PART V, PART IV AND APPLICABLE CONSTRUCTION ACTIVITY REQUIREMENTS FOUND IN APPENDIX A, PART C. OF THE NPDES PERMIT AND IS JOINTLY RESPONSIBLE WITH THE OWNER FOR COMPLIANCE WITH THOSE PORTIONS OF THE PERMIT.

13. TERMINATION OF COVERAGE-PERMITTEE(S) WISHING TO TERMINATE COVERAGE MUST SUBMIT A NOTICE OF TERMINATION (NOT) TO THE MPCA. ALL PERMITTEE(S) MUST SUBMIT A NOT WITHIN 30 DAYS AFTER ONE OR MORE OF THE FOLLOWING CONDITIONS HAVE BEEN MET:
    A. FINAL STABILIZATION, PER NPDES PERMIT PART IV.G. HAS BEEN ACHIEVED ON ALL PORTIONS OF THE SITE FOR WHICH THE PERMITTEE IS RESPONSIBLE.
    B. TRANSFER OF OWNERSHIP AS DESCRIBED IN THE PERMIT.

15. INSPECTIONS
    A. INITIAL INSPECTION FOLLOWING SILT FENCE INSTALLATION BY CITY REPRESENTATIVE IS REQUIRED.
    B. EXPOSED SOIL AREAS: ONCE EVERY 7 DAYS AND WITHIN 24 HOURS FOLLOWING A RAINFALL EVENT GREATER THAN OR EQUAL TO 0.5" IN 24 HOURS.
    C. STABILIZED AREAS: ONCE EVERY 30 DAYS
    D. FROZEN GROUND: AS SOON AS RUNOFF OCCURS OR PRIOR TO RESUMING CONSTRUCTION.
    E. INSPECTION AND MAINTENANCE RECORDS MUST BE RETAINED FOR 3 YEARS AFTER FILING OF THE NOTICE OF TERMINATION AND MUST INCLUDE: DATE AND TIME OF ACTION, NAME OF PERSON(S) CONDUCTING WORK, FINDING OF INSPECTIONS AND RECOMMENDATIONS FOR CORRECTIVE ACTION, DATE AND AMOUNT OF RAINFALL EVENTS GREATER THAN 0.5 INCHES IN A 24 HOUR PERIOD.

16. MINIMUM MAINTENANCE
    A. SILT FENCE TO BE REPAIRED, REPLACED, SUPPLEMENTED WHEN NONFUNCTIONAL, OR 1/3 FULL; WITHIN 24 HOURS
    B. SEDIMENT BASINS DRAINED AND SEDIMENT REMOVED WHEN REACHES 1/2 STORAGE VOLUME. REMOVAL MUST BE COMPLETE WITHIN 72 HOURS OF DISCOVERY.
    C. SEDIMENT REMOVED FROM SURFACE WATERS WITHIN (7)SEVEN DAYS
    D. CONSTRUCTION SITE EXITS INSPECTED, TRACKED SEDIMENT REMOVED WITH 24 HOURS.
    E. PROVIDE COPIES OF EROSION INSPECTION RESULTS TO CITY ENGINEER FOR ALL RAIN EVENTS GREATER THAN 0.5" OVER 24 HOURS

17. THE SWPPP, INCLUDING ALL CHANGES TO IT, AND INSPECTIONS AND MAINTENANCE RECORDS MUST BE KEPT AT THE SITE DURING CONSTRUCTION ACTIVITY BY THE PERMITTEE(S) WHO HAVE OPERATIONAL CONTROL OF THE SITE.

18. OWNER MUST KEEP RECORDS OF ALL PERMITS REQUIRED FOR THE PROJECT, THE SWPPP, ALL INSPECTIONS AND MAINTENANCE, PERMANENT OPERATION AND MAINTENANCE AGREEMENTS, AND REQUIRED CALCULATIONS FOR TEMPORARY AND PERMANENT STORM WATER MANAGEMENT SYSTEMS. THESE RECORDS MUST BE RETAINED FOR THREE YEARS AFTER FILING NPDES NOTICE OF TERMINATION.

19. SWPPP MUST BE AMENDED WHEN:
    A. THERE IS A CHANGE IN DESIGN, OPERATION, MAINTENANCE, WEATHER OR SEASONAL CONDITIONS THAT HAS A SIGNIFICANT EFFECT ON DISCHARGE
    B. INSPECTIONS INDICATE THAT THE SWPPP IS NOT EFFECTIVE AND DISCHARGE IS EXCEEDING WATER QUALITY STANDARDS.
    C. THE BMP'S IN THE SWPPP ARE NOT CONTROLLING POLLUTANTS IN DISCHARGES OR IS NOT CONSISTENT WITH THE TERMS AND CONDITIONS OF THE PERMIT.
    D. AT ANY TIME AFTER PERMIT COVERAGE IS EFFECTIVE, THE MPCA MAY DETERMINE THAT THE PROJECT'S STORMWATER DISCHARGES MAY CAUSE, HAVE REASONABLE POTENTIAL TO CAUSE, OR CONTRIBUTE TO NON-ATTAINMENT OF ANY APPLICABLE WATER QUALITY STANDARD, OR THAT THE SWPPP DOES NOT INCORPORATE THE APPLICABLE REQUIREMENTS IN PART III.A.8., (IMPAIRED WATERS AND TMDLS). IF A WATER QUALITY STANDARD CHANGES DURING THE TERM OF THIS PERMIT, THE MPCA WILL AKE A DETERMINATION AS TO WHETHER A MODIFICATION OF THE SWPPP IS NECESSARY TO ADDRESS THE NEW STANDARD. IF THE MPCA MAKES SUCH DETERMINATION(S) OR ANY OF THE DETERMINATIONS IN PARTS III.B.1.-3., THE MPCA WILL NOTIFY THE PERMITTEE(S) IN WRITING. IN RESPONSE, THE PERMITTEE(S) MUST AMEND THE SWPPP TO ADDRESS THE IDENTIFIED CONCERNS AND SUBMIT INFORMATION REQUESTED BY THE MPCA, WHICH MAY INCLUDE AN INDIVIDUAL PERMIT APPLICATION. IF THE MPCA'S WRITTEN NOTIFICATION REQUIRES A RESPONSE, FAILURE TO RESPOND WITHIN THE SPECIFIED TIMEFRAME CONSTITUTES A PERMIT VIOLATION.

20. CONCRETE WASHOUT AREA
    A. CONTRACTOR TO PROVIDE PREFABRICATED CONCRETE WASH-OUT CONTAINER WITH RAIN PROTECTION PER PLAN.
    B. CONCRETE WASH-OUT TO BE IDENTIFIED WITH SIGNAGE STATING "CONCRETE WASHOUT AREA DO NOT OVERFILL".
    C. CONCRETE WASHOUT WATER NEEDS TO BE PUMPED WITHIN 24 HOURS OF STANDING WATER IN WASHOUT AREA.

21. IN THE EVENT OF ENCOUNTERING A WELL OR SPRING DURING CONSTRUCTION CONTRACTOR TO CEASE CONSTRUCTION ACTIVITY AND NOTIFY ENGINEER.

22. PIPE OUTLETS MUST BE PROVIDED WITH TEMPORARY OR PERMANENT ENERGY DISSIPATION WITHIN 24 HOURS AFTER CONNECTION TO A SURFACE WATER.

23. TEMPORARY AND PERMANENT SOIL STABILIZATION
    A. TEMPORARY SOIL STABILIZATION MEASURES SHALL CONSIST OF SEEDING.
    B. PERMANENT SOIL STABILIZATION SHALL CONSIST OF HYDRO MULCH OR STRAW MULCH.
    C. 7 DAY STABILIZATION TIME FRAME IS REQUIRED FOR ALL EXPOSED SOILS THAT ARE DORMANT OR NOT BEING WORKED WITHIN THE 7 DAY WINDOW.

24. FINAL STABILIZATION
    FINAL STABILIZATION REQUIRES THAT ALL SOIL DISTURBING ACTIVITIES HAVE BEEN COMPLETED AND THAT DISTURBED AREAS ARE STABILIZED BY A UNIFORM PERENNIAL VEGETATIVE COVER WITH 70% OF THE EXPECTED FINAL DENSITY, AND THAT ALL PERMANENT PAVEMENTS HAVE BEEN INSTALLED. ALL TEMPORARY BMP'S SHALL BE REMOVED, DITCHES STABILIZED, AND SEDIMENT SHALL BE REMOVED FROM PERMANENT CONVEYANCES AND SEDIMENTATION BASINS IN ORDER TO RETURN THE POND TO DESIGN CAPACITY.

24. TEMPORARY SEDIMENTATION BASINS
    A. THE TEMPORARY SEDIMENTATION BASINS SHALL BE CONSTRUCTED AND MADE OPERATIONAL PRIOR TO DISTURBANCE OF 10 OR MORE ACRES DRAINING TO A COMMON LOCATION.
    B. TEMPORARY SEDIMENTATION BASINS ARE REQUIRED PRIOR TO RUNOFF LEAVING THE CONSTRUCTION SITE OR ENTERING SURFACE WATERS WHEN 5 OR MORE ACRES OF DISTURBED SOILS DRAIN TO A COMMON LOCATION, SINCE THE SITE IS WITHIN ONE MILE OF IMPAIRED WATER BODY. THE BASIN MUST PROVIDE 3,600 CUBIC FEET OF STORAGE BELOW THE OUTLET PER ACRE DRAINED. IF HYDRAULIC CALCULATIONS ARE AVAILABLE, THE TEMPORARY SEDIMENTATION BASIN MUST PROVIDE A STORAGE VOLUME EQUIVALENT TO THE 2-YEAR, 24-HOUR STORM, BUT IN NO CASE LESS THAN 1800 CUBIC FEET PER ACRE DRAINED. THE TEMPORARY SEDIMENTATION BASIN MUST BE CONSTRUCTED AND MADE OPERATIONAL CONCURRENT WITH THE START OF SOIL DISTURBANCE UP GRADIENT OF THE POND. THE TEMPORARY SEDIMENTATION BASIN SHALL BE DESIGNED TO PREVENT SHORT CIRCUITING. THE OUTFALL SHALL BE DESIGNED TO REMOVE FLOATABLE DEBRIS, ALLOW FOR COMPLETE DRAWDOWN OF THE POND FOR MAINTENANCE ACTIVITIES, AND HAVE ENERGY DISSIPATION. THE EMERGENCY SPILLWAY SHALL BE STABILIZED.
    C. TEMPORARY SEDIMENTATION BASINS SHALL BE SITUATED OUTSIDE OF SURFACE WATERS AND ANY REQUIRED BUFFER ZONE, AND MUST BE DESIGNED TO AVOID DRAINING WETLANDS, UNLESS THE IMPACT IS IN COMPLIANCE WITH THE REQUIREMENTS OF THIS PERMIT.
    D. EXCESSIVE SEDIMENT-LADEN WATER THAT IS NOT PROPERLY FILTERED WILL NOT BE PERMITTED TO DISCHARGE FROM SITE.

25. DEWATERING AND BASIN DRAINING
    A. TURBID OR SEDIMENT-LADEN WATERS RELATED TO DEWATERING OR BASIN DRAINING SHALL BE DISCHARGED TO A TEMPORARY OR PERMANENT SEDIMENTATION BASIN ON THE PROJECT SITE UNLESS INFEASIBLE. THE TEMPORARY OR PERMANENT BASIN MAY DISCHARGE TO SURFACE WATERS IF THE BASIN WATER HAS BEEN VISUALLY CHECKED TO ENSURE ADEQUATE TREATMENT HAS BEEN OBTAINED IN THE BASIN AND THAT THE NUISANCE CONDITIONS WILL NOT RESULT FROM THE DISCHARGE. DISCHARGE POINTS SHALL BE ADEQUATELY PROTECTED FROM EROSION AND PROPER VELOCITY DISSIPATION PROVIDED.
    B. ALL WATER FROM DEWATERING OR BASIN-DRAINING ACTIVITIES MUST BE DISCHARGED IN A MANNER THAT DOES NOT CAUSE NUISANCE CONDITIONS, EROSION IN THE RECEIVING CHANNELS OR ON DOWN SLOPE PROPERTIES, OR INUNDATION IN WETLANDS CAUSING SIGNIFICANT ADVERSE IMPACTS TO THE WETLAND.
    C. IF FILTERS WITH BACKWASH WATERS ARE USED, THE BACKWASH WATER SHALL BE HAULED AWAY FOR DISPOSAL, RETURNED TO THE BEGINNING OF THE TREATMENT PROCESS, OR INCORPORATED INTO SITE IN A MANNER THAT DOES NOT CAUSE EROSION. BACKWASH WATER MAY BE DISCHARGED TO SANITARY SEWER IF PERMISSION IS GRANTED BY THE SANITARY SEWER AUTHORITY.

26. POLLUTION PREVENTION
    A. BUILDING PRODUCTS THAT HAVE THE POTENTIAL TO LEACH POLLUTANTS MUST BE UNDER COVER TO PREVENT DISCHARGE OR PROTECTED BY AN EFFECTIVE MEANS DESIGNED TO MINIMIZE CONTACT WITH STORMWATER.
    B. PESTICIDES, HERBICIDES, INSECTICIDES, FERTILIZERS, TREATMENT CHEMICALS, AND LANDSCAPE MATERIALS MUST BE UNDER COVER.
    C. HAZARDOUS MATERIALS AND TOXIC WASTE CONTAINER MUST BE PROVIDED TO PREVENT VANDALISM.
    D. SOLID WASTE MUST BE STORED, COLLECTED AND DISPOSED OF IN COMPLIANCE WITH MINN. R. CH 7035.
    E. PORTABLE TOILETS MUST BE POSITIONED SO THAT THEY ARE SECURE AND WILL NOT BE TIPPED OR KNOCKED OVER. SANITARY WASTE MUST BE DISPOSED OF PROPERLY IN ACCORDANCE WITH MINN. R. CH 7041.
    F. DISCHARGE OF SPILLED OR LEAKED CHEMICALS, INCLUDING FUEL, FROM ANY AREA WHERE CHEMICALS OR FUEL WILL BE LOADED OR UNLOADED SHALL BE PREVENTED USING DRIP PANS OR ABSORBENTS. SUPPLIES SHALL BE AVAILABLE AT ALL TIMES TO CLEAN UP DISCHARGED MATERIALS AND THAT AN APPROPRIATE DISPOSAL METHOD MUST BE AVAILABLE FOR RECOVERED SPILLED MATERIALS.

27. DESIGN CALCULATIONS
    TEMPORARY & PERMANENT STORMWATER TREATMENT ARE DESIGNED TO MEET MPCA GENERAL & SPECIAL WATER REQUIREMENTS. CALCULATIONS ARE PART OF THE HYDROLOGY REPORT, WHICH IS TO BE CONSIDERED PART OF THE SWPPP DOCUMENTS. SEE HYDROLOGY REPORT FOR ADDITIONAL INFORMATION.

28. GENERAL STORMWATER DISCHARGE REQUIREMENTS
    ALL REQUIREMENTS LISTED IN PART III OF THE PERMIT FOR DESIGN OF THE PERMANENT STORMWATER MANAGEMENT SYSTEM AND DISCHARGE HAVE BEEN INCLUDED IN THE PREPARATION OF THIS SWPPP. THESE INCLUDE BUT ARE NOT LIMITED TO:
    A. THE EXPECTED AMOUNT, FREQUENCY, INTENSITY, AND DURATION PRECIPITATION.
    B. THE NATURE OF STORMWATER RUNOFF AND RUN-ON AT THE SITE.
    C. PEAK FLOW RATES AND STORMWATER VOLUMES TO MINIMIZE EROSION AT OUTLETS AND DOWNSTREAM CHANNEL AND STREAM BANK EROSION.
    D. THE RANGE OF SOIL PARTICLE SIZES EXPECTED TO BE PRESENT ON THE SITE.

29. CONSTRUCTION OF FILTRATION BASINS
    A. NO HEAVY TRAFFIC ON FILTRATION AREAS. CONSTRUCTION TO BE DONE WITH MINIMAL COMPACTION TO FILTRATION AREAS. IF COMPACTION IS ENCOUNTERED, BASIN SOILS MUST BE REMOVED & RELAID.
    B. INFILTRATION SYSTEMS MUST NOT BE EXCAVATED TO FINAL GRADE UNTIL THE CONTRIBUTING DRAINAGE AREA HAD BEEN CONSTRUCTED AND FULLY STABILIZED UNLESS RIGOROUS EROSION PREVENTION AND SEDIMENT CONTROLS ARE PROVIDED(PART III.D.1.C.).
    C. WHEN AN INFILTRATION SYSTEM IS EXCAVATED TO FINAL GRADE (OR WITHIN THREE (3) FEET OF FINAL GRADE), THE PERMITTEE(S) MUST EMPLOY RIGOROUS EROSION PREVENTION AND SEDIMENT CONTROLS (E.G., DIVERSION BERMS) TO KEEP SEDIMENT AND RUNOFF COMPLETELY AWAY FROM THE INFILTRATION AREA. THE AREA MUST BE STAKED OFF AND MARKED SO THAT HEAVY CONSTRUCTION VEHICLES OR EQUIPMENT WILL NOT COMPACT THE SOIL IN THE PROPOSED INFILTRATION AREA.
    D. TO PREVENT CLOGGING OF THE INFILTRATION OR FILTRATION SYSTEM, THE PERMITTEE(S) MUST USE A PRETREATMENT DEVICE SUCH AS A VEGETATED FILTER STRIP, SMALL SEDIMENTATION BASIN, OR WATER QUALITY INLET (E.G., GRIT CHAMBER) TO SETTLE PARTICULATES BEFORE THE STORMWATER DISCHARGES INTO THE INFILTRATION OF FILTRATION SYSTEM.

30. POST CONSTRUCTION
    THE WATER QUALITY VOLUME THAT MUST BE RETAINED ON SITE BY THE PROJECT'S PERMANENT STORMWATER MANAGEMENT SYSTEM DESCRIBED IN PART III.D. SHALL BE ONE (1) INCH OF RUNOFF FROM THE NEW IMPERVIOUS SURFACES CREATED BY THE PROJECT. SEE PART III.D.1. FOR MORE INFORMATION ON INFILTRATION DESIGN, PROHIBITIONS AND APPROPRIATE SITE CONDITIONS.

31. RESPONSIBILITIES
    A. THE OWNER MUST IDENTIFY A CONTRACTOR WHO WILL OVERSEE THE SWPPP IMPLEMENTATION AND THE PERSON RESPONSIBLE FOR INSPECTION AND MAINTENANCE:
    B. THE OWNER MUST IDENTIFY THE A PERSON WHO WILL BE RESPONSIBLE FOR LONG TERM OPERATIONS AND MAINTENANCE OF THE PERMANENT STORMWATER MANAGEMENT SYSTEM:

32. TRAINING REQEMENTS
    THE PERMITTES(S) SHALL ENSURE THE FOLLOWING INDIVIDUALS IDENTIFIED IN THIS PART HAVE BEEN TRAINED IN ACCORDANCE WITH THIS PERMIT'S TRAINING REQUIREMENTS.
    A. WHO MUST BE TRAINED:
    1. INDIVIDUAL(S) PREPARING THE SWPPP FOR THE PROJECT
    2. INDIVIDUAL(S) OVERSEEING IMPLEMENTATION OF, REVISING, AND AMENDING THE SWWP AND INDIVIDUALS(S) PERFORMING INSPECTIONS AS REQUIRED IN PART IV.E. ONE OF THESE INDIVDUAL(S) MUST BE AVAILABLE FOR AN ONSITE INSPECTION WITHIN 72 HOURS UPON REQUEST BY THE MPCA.
    3. INDIVIDUAL(S) PERFORMING OR SUPERVISING THE INSTALLATION, MAINTENANCE AND REPAIR OF BMPS. AT LEAST ONE INDIVIDUAL ON A PROJECT MUST BE TRAINED IN THE JOB DUTIES.
    B. TRAINING CONTENT:
    1. THE CONTENT AND EXTENT OF TRAINING MUST BE COMMENSURATE WITH THE INDIVIDUAL'S JOB DUTIES AND RESPONSIBILITIES WITH REGARD TO ACTIVITIES COVERED UNDER THIS PERMIT FOR THE PROJECT. AT LEAST ONE INDIVIDUAL PRESENT ON THE PERMITTED PROJECT SITE (OR AVAILABLE TO THE PROJECT SITE IN 72 HOURS) MUST BE TRAINED IN THE JOB DUTIES DESCRIBED IN PART III.F.1.B. AND PARTIII.F.1.C.
    C. THE PERMITTEE(S) SHALL ENSURE THAT THE INDIVIDUALS ARE TRAINED BY LOCAL, STATE, FEDERAL AGENCIES, PROFESSIONAL OR OTHER ENTITIES WITH EXPERTISE IN EROSION PREVENTION, SEDIMENT CONTROL, PERMANENT STORMWATER MANAGEMENT AND THE MINNESOTA NPDES/SDS CONSTRUCTION STORMWATER PERMIT. AN UPDATE REFESHER-TRAINING MUST BE ATTENDED EVERY THREE (3) YEARS STARTING THREE (3) YEARS FROM THE ISSUANCE DATE OF THIS PERMIT.

LIST OF CONTACTS

TILE	CONTACT	COMPANY	PHONE NUMBER
OWNER	DENNIS BACKES	BACKES COMPANIES	612-369-7750
PROJECT MANAGER	TODD MCLOUTH	LOUCKS	763-496-6742
SWPPP DESIGNER	ZACH WEBBER	LOUCKS	763-496-6753
CONTRACTOR	TBD		
SITE MANAGER	TBD		

* MPCA 24HR. HAZARDOUS SPILL HOTLINE: 651-649-5457 OF 80420798

EROSION CONTROL NOTES

1. ALL STREETS IN AND ADJACENT TO THE PROJECT SHALL REMAIN CLEAN AND PASSABLE AT ALL TIMES.
2. A STABILIZED CONSTRUCTION ENTRANCE WILL BE PLACED AT ALL ENTRANCES THAT LEAD TO THE PROJECT SITE IN ACCORDANCE WITH THE STORMWATER POLLUTION PREVENTION PLAN AND THE APPROVED DETAILS.
3. SEDIMENT CONTROLS MUST BE IN PLACE AND APPROVED BY THE ENGINEER BEFORE ANY PHASE OF CONSTRUCTION CAN BEGIN.
4. INLET PROTECTION WILL BE INSTALLED AT ALL CATCH BASINS WITHIN THE PROJECT AREA PER STANDARD DETAILS UNTIL THE SITE IS STABILIZED.
5. PIPE OUTLETS MUST BE PROVIDED WITH TEMPORARY OR PERMANENT ENERGY DISSIPATION WITHIN 24 HOURS AFTER CONNECTION TO SURFACE WATER.
6. STABILIZATION OF DISTURBED AREAS SHALL BE DONE BY PERMANENT TURF ESTABLISHMENT WHENEVER POSSIBLE.
7. IN THE EVENT THAT PERMANENT STABILIZATION CANNOT BE IMPLEMENTED WITHIN 7 DAYS AFTER CONSTRUCTION ACTIVITY IN THE DISTURBED AREA HAS CEASED, TEMPORARY STABILIZATION BMPS MUST BE SCHEDULED TO OCCUR WITHIN THAT 7 DAY TIME FRAME RAPID STABILIZATION METHOD 4 SHALL BE EMPLOYED WITHIN 200 FEET OF THE NORMAL WETTED PERIMETER OF ALL DISCHARGE POINTS WITHIN 24 HOURS.
8. ALL STOCKPILES MUST HAVE PERIMETER SEDIMENT CONTROL IMPLEMENTED AND MAINTAINED AT ALL TIMES. STOCKPILES SHALL RECEIVE TEMPORARY STABILIZATION IF UNWORKED FOR 7 DAYS.
9. CONCRETE SLURRY FROM REMOVAL OPERATIONS MUST BE VACUUMED UP IMMEDIATELY. NO CONCRETE WASHOUT SHALL COME IN CONTACT WITH THE GROUND AND MUST BE PROPERLY DISPOSED OF.
10. ADDITIONAL EROSION AND SEDIMENT CONTROL MAY BE ADDED DURING ANY PHASE OF CONSTRUCTION AS DIRECTED BY THE ENGINEER.
11. CONTRACTOR MUST SUBMIT A DEWATERING PLAN TO THE ENGINEER FOR APPROVAL 10 DAYS PRIOR TO ANY DEWATERING ON SITE. THE PLAN MUST INCLUDE A DEWATERING SYSTEM PRIOR TO DISCHARGING INTO RECEIVING WATER. THE DEWATERING PLAN MUST ENSURE THAT THE DISCHARGE WATER IS FREE OF SEDIMENT AND TURBID WATER IN ACCORDANCE WITH THE PROJECT SPEC. THE DEWATERING PLAN MUST ALSO INCLUDE A COMPONENT FOR ONSITE TESTING AND MONITORING OF TURBIDITY AND PH.
12. RAPID STABILIZATION #4 WITH CATEGORY 3N BLANKET ON SIDE SLOPES 3:1 OR STEEPER.
13. TEMPORARY OR PERMANENT STABILIZATION AND DOWN GRADIENT PERIMETER SEDIMENT CONTROL IS NEEDED ON ROW, CURB, AND GUTTER LINE.

PERMANENT STORMWATER MANAGEMENT

	INFILTRATION
	STORMWATER HARVEST AND REUSE
X	FILTRATION
X	WET SEDIMENTATION BASIN
	REGIONAL PONDING

RECEIVING WATERS

NAME OF WATER BODY	TYPE OF WATER BODY	SPECIAL WATER	IMAIRED WATER	TYPE OF SPECIAL WATER
CROW RIVER	RIVER	NO	YES	

*7 DAY STABILIZATION TIME FRAME REQUIRED

ESTIMATED QUANTITIES

DESCRIPTION	UNIT	QUANTITY
TEMPORARY ROCK CONSTRUCTION ENTRANCE	EA	3
SILT FENCE (STANDARD)	LF	±11,590
STAGE 2 SILT FENCE (STANDARD)	LF	±3,355
INLET PROTECTION	EA	42
WOODFIBER BLANKET	SY	.
CONCRETE WASHOUT	EA	.
BIOROLL	LF	±15,465

UNIVERSITY OF MINNESOTA
Zachary Webber
Design of Construction SWPPP (May 31 2018)

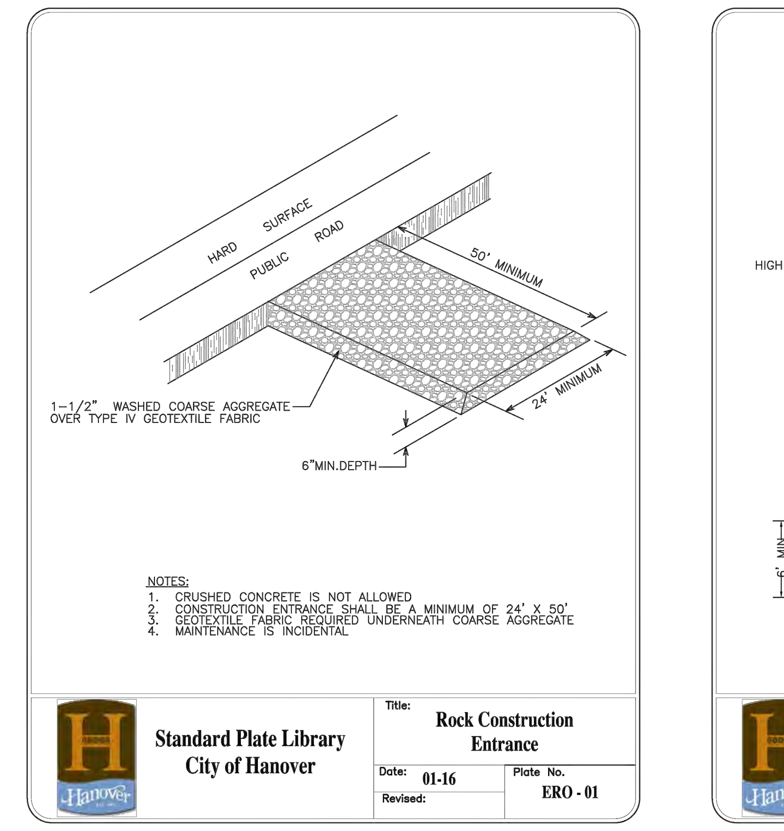

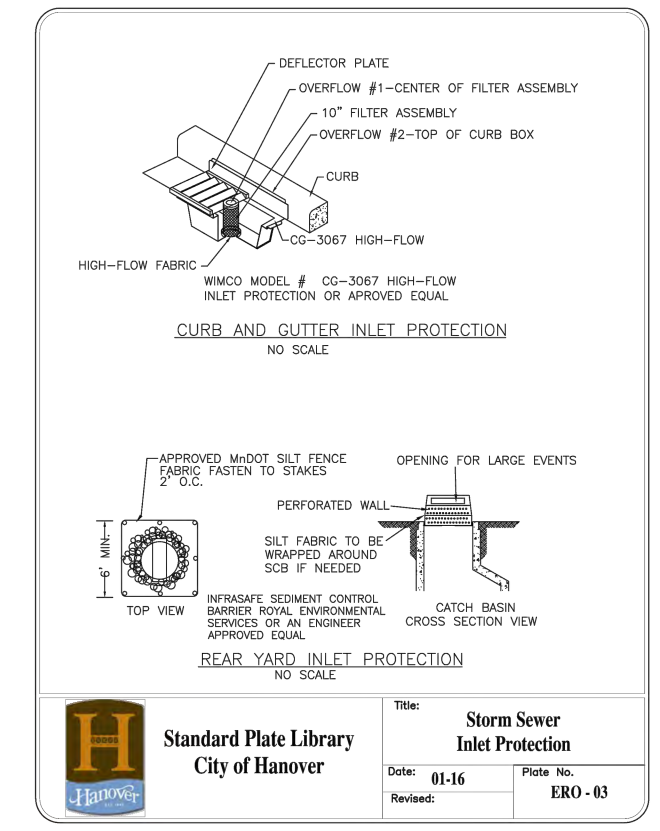

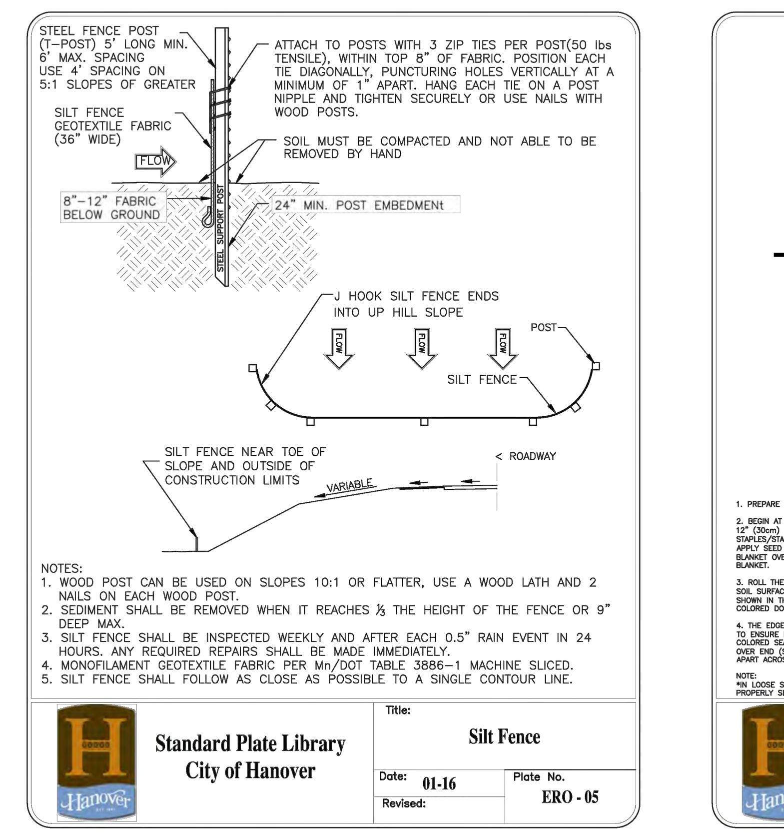

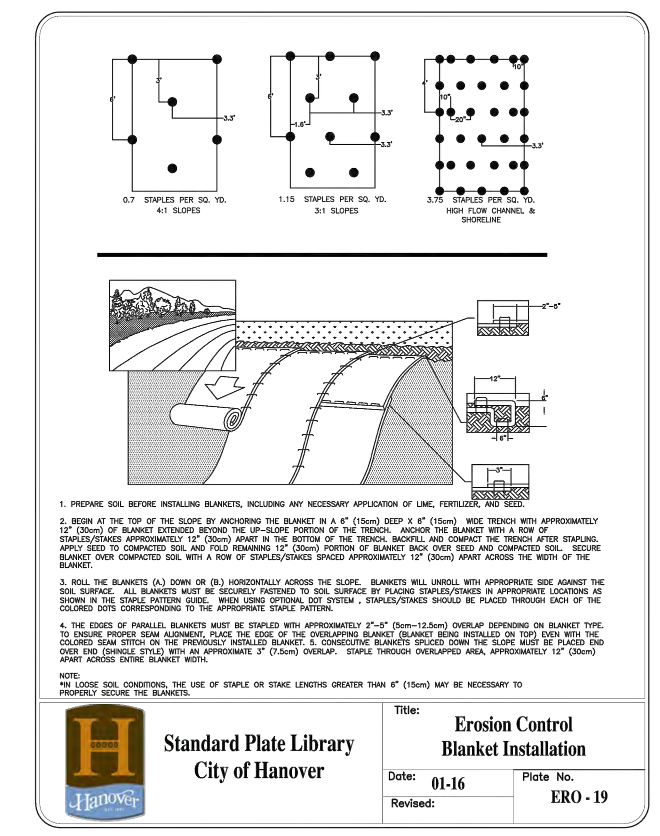

SPECIAL AND IMPAIRED WATERS MAP

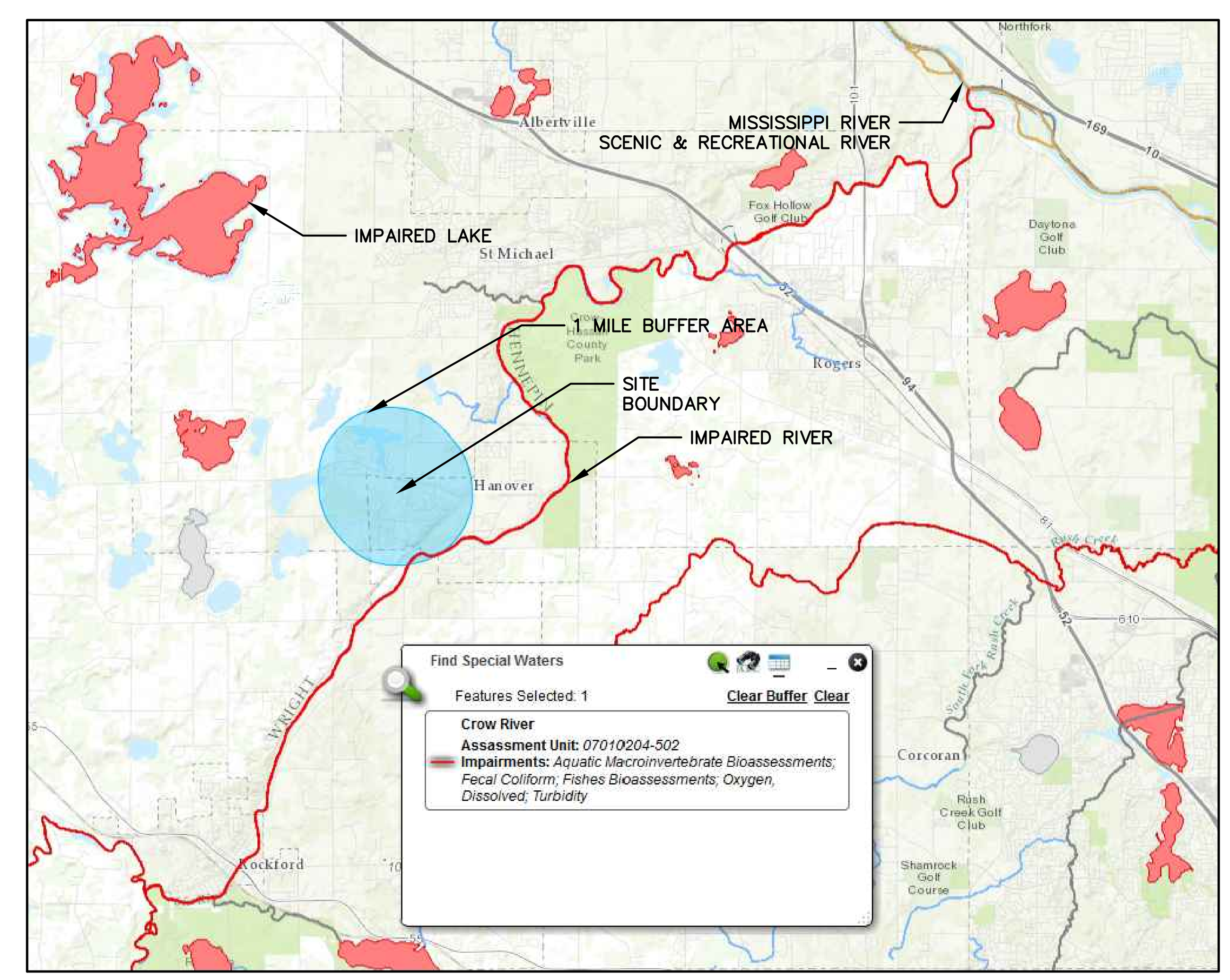

CROW RIVER HEIGHTS WEST FUTURE ADD.

HANOVER, MN

BACKES COMPANIES
11413 ASHBURY CIRCLE N.
CHAMPLIN, MN 55316
PHONE: (612) 369-7750
FAX (612) 566-1525

LOUCKS
PLANNING
CIVIL ENGINEERING
LAND SURVEYING
LANDSCAPE ARCHITECTURE
ENVIRONMENTAL
7200 Hemlock Lane, Suite 300
Maple Grove, MN 55369
763.424.5505
www.loucksinc.com

CADD QUALIFICATION

CADD files prepared by the Consultant for this project are instruments of the Consultant professional services for use solely with respect to this project. These CADD files shall not be used on other projects, for additions to this project, or for completion of this project by others without written approval by the Consultant. With the Consultant's approval, others may be permitted to obtain copies of the CADD drawing files for information and reference only. All intentional or unintentional revisions, additions, or deletions to these CADD files shall be made at the full risk of that party making such revisions, additions or deletions and that party shall hold harmless and indemnify the Consultant from any & all responsibilities, claims, and liabilities.

SUBMITTAL/REVISIONS

04/20/18	CITY SUBMITTAL
05/24/18	CITY COMMENTS

PROFESSIONAL SIGNATURE

I hereby certify that this plan, specification or report was prepared by me or under my direct supervision and that I am a duly Licensed Professional Engineer under the laws of the State of Minnesota.

PRELIMINARY

License No. 20383 — Todd W. McLouth - PE
Date

QUALITY CONTROL

Loucks Project No.	16101A
Project Lead	TWM
Drawn By	ZHW
Checked By	TWM
Review Date	05/24/18

SHEET INDEX

C0-1	COVER SHEET
C1-1	EXISTING CONDITIONS
C1-2	PRELIMINARY PLAT
C2-0 - C2-2	SITE PLAN
C3-0 - C3-2	GRADING PLAN
C3-3 - C3-5	SWPPP PLAN & NOTES
C4-0 - C4-2	UTILITY PLAN
C8-1 - C8-2	DETAILS
L0-1 - L0-3	TREE PRESERVATION
L0-4	TREE INVENTORY
L1-1 - L1-2	LANDSCAPE PLANS
L2-1	LANDSCAPE DETAILS

SWPPP NOTES

C3-5

Plotted: 05 /25 / 2018 11:55 AM W:\2016\16101A\CADD DATA\CIVIL_dwg Sheet Files\C3-3 SWPPP

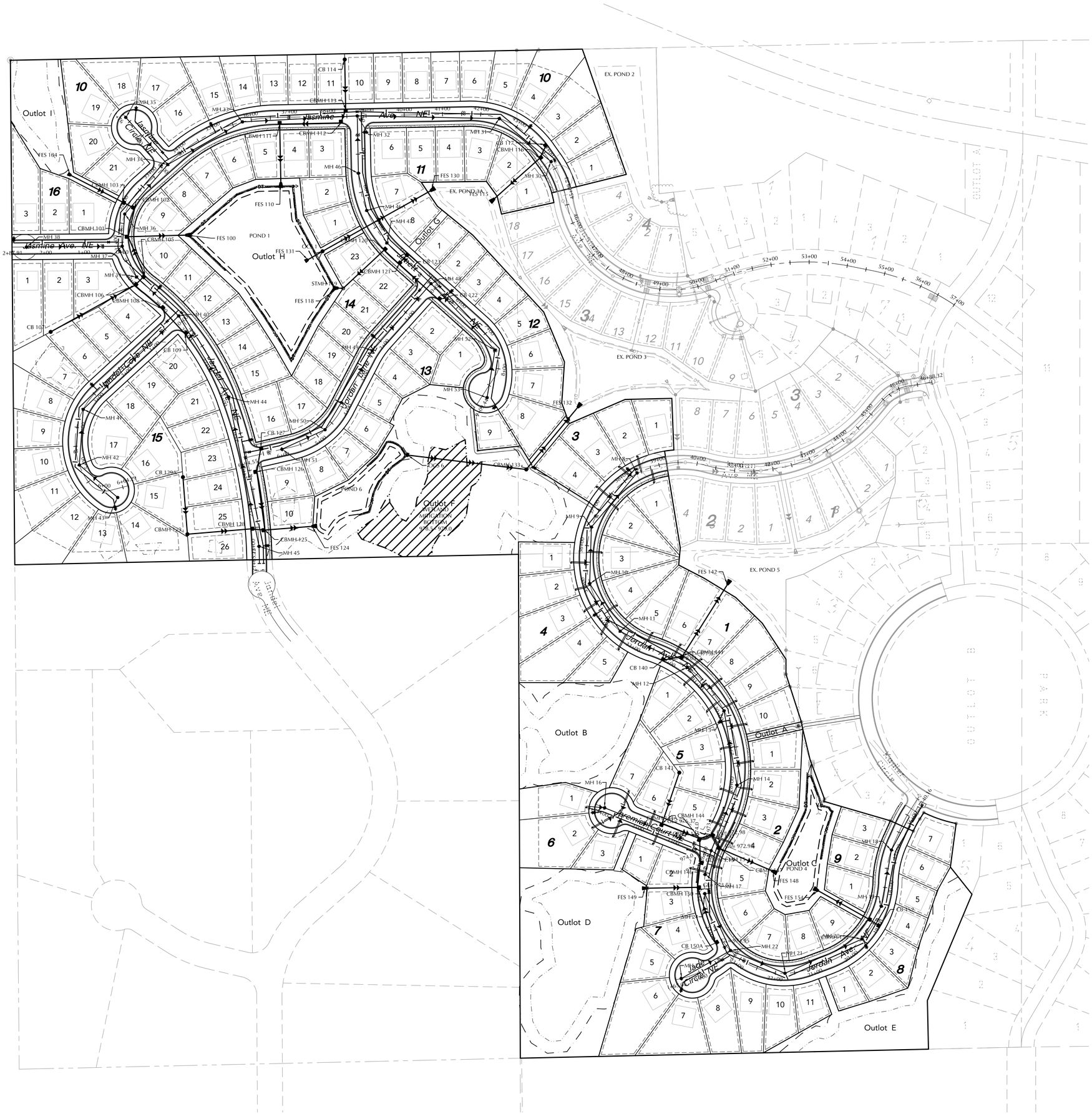

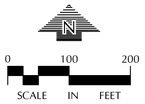

EXISTING	CIVIL LEGEND	PROPOSED
	SANITARY MANHOLE	
	STORM MANHOLE	
	CATCH BASIN	
	CULVERT	
	HYDRANT	
	GATEVALVE	
	POST INDICATOR VALVE	
	LIGHT POLE	
	POWER POLE	
	SIGN	
	BENCHMARK	
	SOIL BORINGS	
	WATER MANHOLE	
	TELEPHONE MANHOLE	
	UTILITY MANHOLE	
	ELECTRIC MANHOLE	
	WATER SERVICE	
	SANITARY SERVICE	
	HANDICAP PARKING	
	DIRECTION OF FLOW	
	SPOT ELEVATION	
	CONTOURS	
	SANITARY SEWER	
	STORM SEWER	
	WATERMAIN	
	FORCEMAIN	
	DRAINTILE	
	SILT FENCE	
	CURB & GUTTER	
	RETAINING WALL	
	TREELINE	
	EASEMENT LINE	
	SETBACK LINE	
	FENCE LINE	
	UNDERGROUND TELE	
	UNDERGROUND GAS	
	OVERHEAD UTILITY	

UTILITY NOTES

1. SEE CITY OF HANOVER GENERAL SPECIFICATIONS AND DETAIL PLATES FOR STREET AND UTILITY CONSTRUCTION.

CALL BEFORE YOU DIG!
Gopher State One Call
TWIN CITY AREA: 651-454-0002
TOLL FREE: 1-800-252-1166

WARNING:

THE CONTRACTOR SHALL BE RESPONSIBLE FOR CALLING FOR LOCATIONS OF ALL EXISTING UTILITIES. THEY SHALL COOPERATE WITH ALL UTILITY COMPANIES IN MAINTAINING THEIR SERVICE AND / OR RELOCATION OF LINES.

THE CONTRACTOR SHALL CONTACT GOPHER STATE ONE CALL AT 651-454-0002 AT LEAST 48 HOURS IN ADVANCE FOR THE LOCATIONS OF ALL UNDERGROUND WIRES, CABLES, CONDUITS, PIPES, MANHOLES, VALVES OR OTHER BURIED STRUCTURES BEFORE DIGGING. THE CONTRACTOR SHALL REPAIR OR REPLACE THE ABOVE WHEN DAMAGED DURING CONSTRUCTION AT NO COST TO THE OWNER.

CROW RIVER HEIGHTS WEST FUTURE ADD.

HANOVER, MN

BACKES COMPANIES
11413 ASHBURY CIRCLE N.
CHAMPLIN, MN 55316
PHONE: (612) 369-7750
FAX (612) 566-1525

LOUCKS
PLANNING
CIVIL ENGINEERING
LAND SURVEYING
LANDSCAPE ARCHITECTURE
ENVIRONMENTAL
7200 Hemlock Lane, Suite 300
Maple Grove, MN 55369
763.424.5505
www.loucksinc.com

CADD QUALIFICATION

CADD files prepared by the Consultant for this project are instruments of the Consultant professional services for use solely with respect to this project. These CADD files shall not be used on other projects, for additions to this project, or for completion of this project by others without written approval by the Consultant. Only hard copy (paper) documents shall be permitted to obtain copies of the CADD drawing files for information and reference only. All intentional or unintentional revisions, additions, or deletions to these CADD files shall be made at the full risk of that party making such revisions, additions or deletions and that party shall hold harmless and indemnify the Consultant from any & all responsibilities, claims, and liabilities.

SUBMITTAL/REVISIONS

04/20/18	CITY SUBMITTAL
05/24/18	CITY COMMENTS

PROFESSIONAL SIGNATURE

I hereby certify that this plan, specification or report was prepared by me or under my direct supervision and that I am a duly Licensed Professional Engineer under the laws of the State of Minnesota.

PRELIMINARY

Licensed Name: McLouth - PE
Date: License No. 20383

QUALITY CONTROL

Loucks Project No.	16101A
Project Lead	TWM
Drawn By	ZHW
Checked By	TWM
Review Date	05/24/18

SHEET INDEX

C0-1	COVER SHEET
C1-1	EXISTING CONDITIONS
C1-2	PRELIMINARY PLAT
C2-0 - C2-2	SITE PLAN
C3-0 - C3-2	GRADING PLAN
C3-3 - C3-5	SWPPP PLAN & NOTES
C4-0 - C4-2	UTILITY PLAN
C8-1 - C8-2	DETAILS
L0-1 - L0-3	TREE PRESERVATION
L0-4	TREE INVENTORY
L1-1 - L1-2	LANDSCAPE PLANS
L2-1	LANDSCAPE DETAILS

OVERALL UTILITY PLAN

C4-0

Plotted: 05 /25 / 2018 11:56 AM W:\2016\16101A\CADD DATA\CIVIL_dwg Sheet Files\C4-1 UTILITY PLAN

EXISTING	CIVIL LEGEND	PROPOSED
	SANITARY MANHOLE	
	STORM MANHOLE	
	CATCH BASIN	
	CULVERT	
	HYDRANT	
	GATEVALVE	
	POST INDICATOR VALVE	
	LIGHT POLE	
	POWER POLE	
	SIGN	
	BENCHMARK	
	SOIL BORINGS	
	WATER MANHOLE	
	TELEPHONE MANHOLE	
	UTILITY MANHOLE	
	ELECTRIC MANHOLE	
	WATER SERVICE	
	SANITARY SERVICE	
	HANDICAP PARKING	
	DIRECTION OF FLOW	
	SPOT ELEVATION	
	CONTOURS	
	SANITARY SEWER	
	STORM SEWER	
	WATERMAIN	
	FORCEMAIN	
	DRAINTILE	
	SILT FENCE	
	CURB & GUTTER	
	RETAINING WALL	
	TREELINE	
	EASEMENT LINE	
	SETBACK LINE	
	FENCE LINE	
	UNDERGROUND TELE	
	UNDERGROUND GAS	
	OVERHEAD UTILITY	

CALL BEFORE YOU DIG!

Gopher State One Call

TWIN CITY AREA: 651-454-0002
TOLL FREE: 1-800-252-1166

WARNING:

THE CONTRACTOR SHALL BE RESPONSIBLE FOR CALLING FOR LOCATIONS OF ALL EXISTING UTILITIES. THEY SHALL COOPERATE WITH ALL UTILITY COMPANIES IN MAINTAINING THEIR SERVICE AND / OR RELOCATION OF LINES.

THE CONTRACTOR SHALL CONTACT GOPHER STATE ONE CALL AT 651-454-0002 AT LEAST 48 HOURS IN ADVANCE FOR THE LOCATIONS OF ALL UNDERGROUND WIRES, CABLES, CONDUITS, PIPES, MANHOLES, VALVES OR OTHER BURIED STRUCTURES BEFORE DIGGING. THE CONTRACTOR SHALL REPAIR OR REPLACE THE ABOVE WHEN DAMAGED DURING CONSTRUCTION AT NO COST TO THE OWNER.

CROW RIVER HEIGHTS WEST FUTURE ADD.

HANOVER, MN

BACKES COMPANIES
11413 ASHBURY CIRCLE N.
CHAMPLIN, MN 55316
PHONE: (612) 369-7750
FAX (612) 566-1525

LOUCKS
PLANNING
CIVIL ENGINEERING
LAND SURVEYING
LANDSCAPE ARCHITECTURE
ENVIRONMENTAL
7200 Hemlock Lane, Suite 300
Maple Grove, MN 55369
763.424.5505
www.loucksinc.com

CADD QUALIFICATION

CADD files prepared by the Consultant for this project are instruments of the Consultant's professional services for use solely with respect to this project. These CADD files shall not be used on other projects, for additions to this project, or for completion of this project by others without written approval by the Consultant. With the Consultant's approval, others may be permitted to obtain copies of the CADD drawing files for information and reference only. All intentional or unintentional revisions, additions, or deletions to these CADD files shall be made at the full risk of that party making such revisions, additions or deletions and that party shall hold harmless and indemnify the Consultant from any & all responsibilities, claims, and liabilities.

SUBMITTAL/REVISIONS

04/20/18	CITY SUBMITTAL
05/24/18	CITY COMMENTS

PROFESSIONAL SIGNATURE

I hereby certify that this plan, specification, or report was prepared by me or under my direct supervision and that I am a duly Licensed Professional Engineer under the laws of the State of Minnesota.

PRELIMINARY

Licensed Name: McLouth - PE
Date: License No. 20383

QUALITY CONTROL

Loucks Project No.	16101A
Project Lead	TWM
Drawn By	ZHW
Checked By	TWM
Review Date	05/24/18

SHEET INDEX

C0-1	COVER SHEET
C1-1	EXISTING CONDITIONS
C1-2	PRELIMINARY PLAT
C2-0 - C2-2	SITE PLAN
C3-0 - C3-2	GRADING PLAN
C3-3 - C3-5	SWPPP PLAN & NOTES
C4-0 - C4-2	UTILITY PLAN
C8-1 - C8-2	DETAILS
L0-1 - L0-3	TREE PRESERVATION
L0-4	TREE INVENTORY
L1-1 - L1-2	LANDSCAPE PLANS
L2-1	LANDSCAPE DETAILS

NORTH UTILITY PLAN

C4-1

Plotted: 05/25/2018 11:56 AM W:\2016\16101A\CADD DATA\CIVIL\ dwg Sheet Files\C4-1 UTILITY PLAN

EXISTING	CIVIL LEGEND	PROPOSED
	SANITARY MANHOLE	
	STORM MANHOLE	
	CATCH BASIN	
	CULVERT	
	HYDRANT	
	GATEVALVE	
	POST INDICATOR VALVE	
	LIGHT POLE	
	POWER POLE	
	SIGN	
	BENCHMARK	
	SOIL BORINGS	
	WATER MANHOLE	
	TELEPHONE MANHOLE	
	UTILITY MANHOLE	
	ELECTRIC MANHOLE	
	WATER SERVICE	
	SANITARY SERVICE	
	HANDICAP PARKING	
	DIRECTION OF FLOW	
	SPOT ELEVATION	
	CONTOURS	
	SANITARY SEWER	
	STORM SEWER	
	WATERMAIN	
	FORCEMAIN	
	DRAINTILE	
	SILT FENCE	
	CURB & GUTTER	
	RETAINING WALL	
	TREELINE	
	EASEMENT LINE	
	SETBACK LINE	
	FENCE LINE	
	UNDERGROUND TELE	
	UNDERGROUND GAS	
	OVERHEAD UTILITY	

0 50 100
SCALE IN FEET

CALL BEFORE YOU DIG!
Gopher State One Call
TWIN CITY AREA: 651-454-0002
TOLL FREE: 1-800-252-1166

WARNING:

THE CONTRACTOR SHALL BE RESPONSIBLE FOR CALLING FOR LOCATIONS OF ALL EXISTING UTILITIES. THEY SHALL COOPERATE WITH ALL UTILITY COMPANIES IN MAINTAINING THEIR SERVICE AND / OR RELOCATION OF LINES.

THE CONTRACTOR SHALL CONTACT GOPHER STATE ONE CALL AT 651-454-0002 AT LEAST 48 HOURS IN ADVANCE FOR THE LOCATIONS OF ALL UNDERGROUND WIRES, CABLES, CONDUITS, PIPES, MANHOLES, VALVES OR OTHER BURIED STRUCTURES BEFORE DIGGING. THE CONTRACTOR SHALL REPAIR OR REPLACE THE ABOVE WHEN DAMAGED DURING CONSTRUCTION AT NO COST TO THE OWNER.

CROW RIVER HEIGHTS WEST FUTURE ADD.
HANOVER, MN

BACKES COMPANIES
11413 ASHBURY CIRCLE N.
CHAMPLIN, MN 55316
PHONE: (612) 369-7750
FAX (612) 566-1525

LOUCKS
PLANNING
CIVIL ENGINEERING
LAND SURVEYING
LANDSCAPE ARCHITECTURE
ENVIRONMENTAL
7200 Hemlock Lane, Suite 300
Maple Grove, MN 55369
763.424.5505
www.loucksinc.com

CADD QUALIFICATION

CADD files prepared by the Consultant for this project are instruments of the Consultant professional services for use solely with respect to this project. These CADD files shall not be used on other projects, for additions to this project, or for completion of this project by others without written approval by the Consultant. With the Consultant's approval, others may be permitted to obtain copies of the CADD drawing files for information and reference only. All intentional or unintentional revisions, additions, or deletions to these CADD files shall be made at the full risk of that party making such revisions, additions or deletions and that party shall hold harmless and indemnify the Consultant from any & all responsibilities, claims, and liabilities.

SUBMITTAL/REVISIONS

04/20/18	CITY SUBMITTAL
05/24/18	CITY COMMENTS

PROFESSIONAL SIGNATURE

I hereby certify that this plan, specification, or report was prepared by me or under my direct supervision and that I am a duly Licensed Professional Engineer under the laws of the State of Minnesota.

PRELIMINARY

Licensed Name	Tim Walcott South - PE
Date	
License Number	20383

QUALITY CONTROL

Loucks Project No.	16101A
Project Lead	TWM
Drawn By	ZHW
Checked By	TWM
Review Date	05/24/18

SHEET INDEX

C0-1	COVER SHEET
C1-1	EXISTING CONDITIONS
C1-2	PRELIMINARY PLAT
C2-0 - C2-2	SITE PLAN
C3-0 - C3-2	GRADING PLAN
C3-3 - C3-5	SWPPP PLAN & NOTES
C4-0 - C4-2	UTILITY PLAN
C8-1 - C8-2	DETAILS
L0-1 - L0-3	TREE PRESERVATION
L0-4	TREE INVENTORY
L1-1 - L1-2	LANDSCAPE PLANS
L2-1	LANDSCAPE DETAILS

SOUTH UTILITY PLAN

C4-2

Plotted: 05/25/2018 11:57 AM W:\2016\16101A\CADD DATA\CIVIL\ dwg Sheet Files\C4-1 UTILITY PLAN

CROW RIVER HEIGHTS WEST FUTURE ADD.

HANOVER, MN

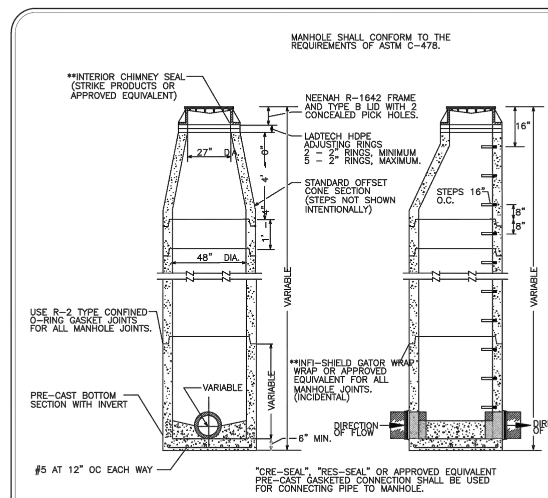

NOTES:
1. ALL CONNECTIONS TO EXISTING STRUCTURES SHALL BE CORE DRILLED
2. MANHOLE STEPS SHALL BE CAST IN ALUMINUM OR MA INDUSTRY WITH VINYL COATING OR APPROVED EQUIVALENT AND SHALL BE LOCATED ON THE DOWN STREAM SIDE OF MANHOLE
3. STEPS SHALL BE PLACED SO THAT THE OFFSET VERTICAL PORTION OF THE CONE IS FACING DOWN STREAM
4. MANHOLE COVERS SHALL BE CAST WITH THE WORDS "SANITARY SEWER"
5. THE INITIAL & FINAL RAISING OF CASTINGS SHALL BE CONSIDERED INCLUDED IN THE UNIT PRICE BID FOR CASTING THE ASSEMBLY
6. MAXIMUM DEPTH FROM TOP OF CASTING TO FIRST STEP SHALL NOT BE MORE THAN 16"
7. STEPS SHALL ALIGN WITH THE OPENING TO PROVIDE ACCESS TO THE MANHOLES
8. ALL SANITARY MANHOLES SHALL BE SEALED WITH INTERNAL MOLDED POLYMER SHIELD, SUCH AS "I/I BARRIER" AS MANUFACTURED BY STRIKE PRODUCTS APPROVED EQUIVALENT

Standard Plate Library City of Hanover | Title: Standard Manhole for Sanitary Sewer | Date: 01-16 | Revised: | Plate No. SAN - 01

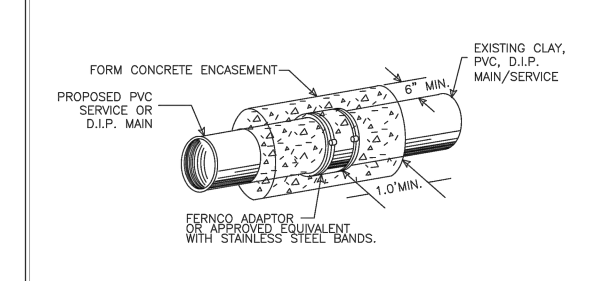

NOTES:
WRAP ADAPTER WITH POLYETHYLENE PRIOR TO ENCASEMENT WITH CONCRETE

Standard Plate Library City of Hanover | Title: Sanitary Sewer Main/Service Connection Detail | Date: 01-16 | Revised: | Plate No. SAN - 05

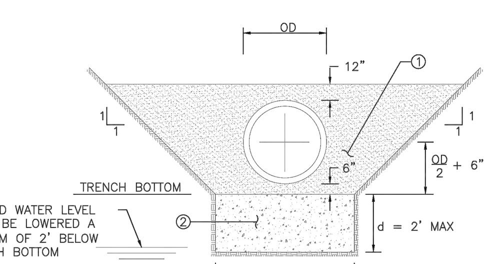

1. GRANULAR PIPE BEDDING MATERIAL (MNDOT SPEC 3149.2F) (INCIDENTAL)
2. 1½" CLEAR AGGREGATE BEDDING. TO BE USED ONLY IN AREAS AS DIRECTED BY ENGINEER. (NO PAYMENT WILL BE MADE WITHOUT PRIOR APPROVAL FROM THE ENGINEER)

Standard Plate Library City of Hanover | Title: PVC Pipe Bedding Detail | Date: 01-16 | Revised: | Plate No. SAN - 06

NOTES:
1. Whenever service lines are installed in areas of high groundwater the last 5', as a minimum, are to be installed as a 45° riser to extend service line above groundwater level.
2. Metal fence post at end of water and sanitary service, 4' above grade. Water fence post to be painted blue. Sanitary fence post to be painted green.
3. Cleanouts are required every 100' on sanitary sewer services.

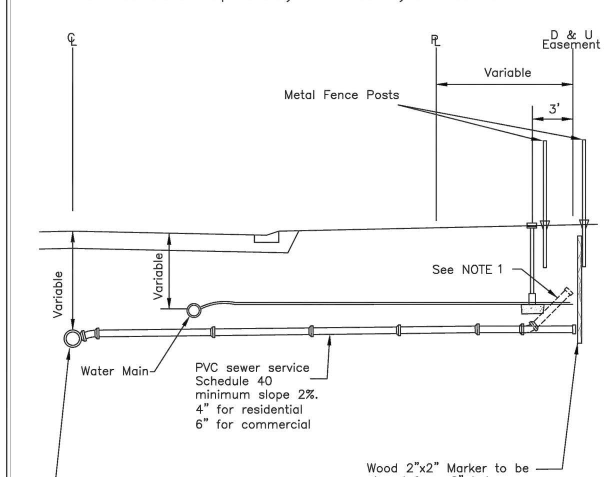

Standard Plate Library City of Hanover | Title: Sewer Service Connections | Date: 01-16 | Revised: | Plate No. SAN - 10

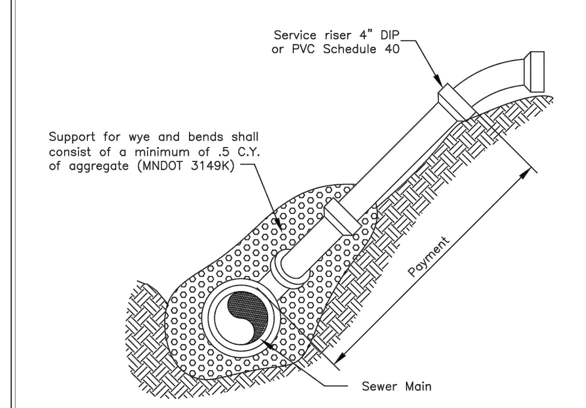

NOTE:
Where the sanitary main is deeper than 14.5', service risers shall be required.

Standard Plate Library City of Hanover | Title: Service Riser | Date: 01-16 | Revised: | Plate No. SAN - 11

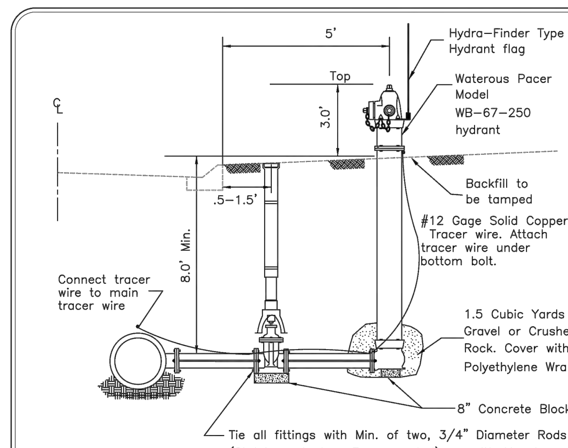

NOTE:
1. Factory installed plugs required whenever hydrants are installed in areas with high groundwater level, as determined by dewatering requirements and the City Engineer. The main nozzle shall be painted blue for all hydrants with plugged drain holes.
2. All ductile iron watermain fittings shall be fusion bonded epoxy coated.
3. Hydrants shall be marked with stainless steel tag from factory.
4. Contractor shall supply two hydrant flags, one to be installed on the hydrant and the second delivered to the Hanover Maintenance Facility.
5. All hydrant leads are to be constructed with Polywrapped DIP, Class 52.
6. All watermain bolts shall be ASTM F593 Type 316 Stainless Steel or approved equal.

Standard Plate Library City of Hanover | Title: Hydrant Detail | Date: 01-16 | Revised: | Plate No. WAT - 01

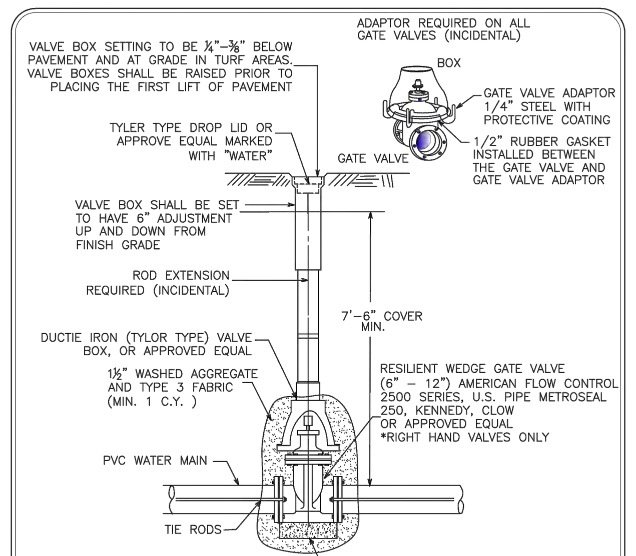

NOTES:
1. GATE VALVES SHOULD BE USED ON 6" THROUGH 12" WATERMAIN.
2. VALVE BOX INSERTS ARE NOT ALLOWED UNLESS APPROVED BY THE ENGINEER.
3. VALVE BOXES SHALL BE INSTALLED PLUMB AND SHALL ALLOW A 4" P.V.C. PIPE TO PASS ENTIRELY OVER THE GATE VALVE NUT AFTER INSTALLATION IS COMPLETE.
4. ALL VALVES SHALL BE TIED WITH 3/4" THREADED TIE RODS TO THE MAIN. MEGA LUGS MAY BE USED IN LIEU OF TIE RODS.
5. THE HEIGHT OF THE CAST IRON OR DUCTILE IRON ADJUSTMENT RING IS DETERMINED BY THE THICKNESS OF THE WEAR COURSE.
6. CAST IRON OR DUCTILE IRON ADJUSTMENT RINGS TO BE INSTALLED AS PER MANUFACTURE'S RECOMMENDATION.
7. THE INITIAL & FINAL RAISING OF VALVE BOXES SHALL BE CONSIDERED INCIDENTAL TO THE PROJECT.

Standard Plate Library City of Hanover | Title: Gate Valve and Box Installation | Date: 01-16 | Revised: | Plate No. WAT - 02

NOTES:
1. All new curb boxes must have riser rods adjustable up and down for 7½' of cover. When an existing curb box is on a construction or reconstruction project, riser rods shall be installed to all curb boxes on that project.
2. Placement of curb stop and box on private streets shall be 10' back of curb with no copper stubbed past the curb stop and box.
3. Copper is to be one piece, no joints, couplings, etc., allowed from main to curb stop.
4. Water service and sanitary sewer service shall have a 3' horizontal separation.
5. Curb boxes located in driveways or parking lots shall be covered with a ford A-1 meter box cover.
6. Metal fence post at end of water and sanitary service, 4' above grade Water fence post to be painted blue. Sanitary fence post to be painted green.
7. Copper size (C.T.S.) polyethylene service tubing sized per plan.
8. HDPE is to be one piece, no joints, couplings, etc. allowed from main to stop. Backfill material shall be granualar bedding material, free of stones.
9. Tracer wire, #10 AWG solid copper wire with U.S.E. rated insulation.

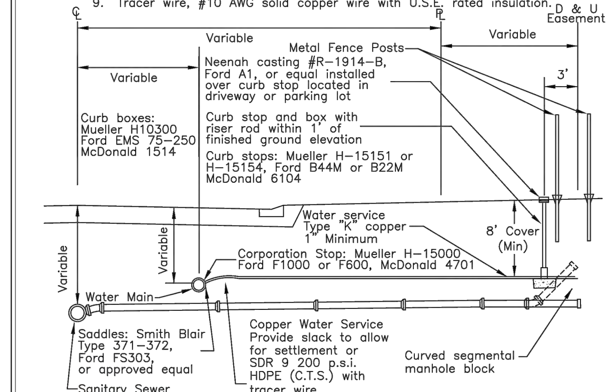

Standard Plate Library City of Hanover | Title: Water Service Connections | Date: 01-16 | Revised: | Plate No. WAT - 04

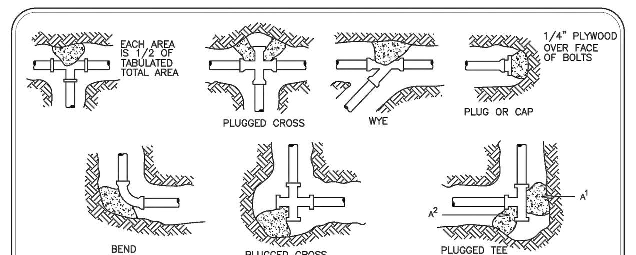

NOMINAL FITTING SIZE, INCHES	TEE, WYE, PLUG OR CAP	90° BEND, PLUGGED CROSS	TEE PLUGGED ON RUN A1	TEE PLUGGED ON RUN A2	45° BEND	22-1/2° BEND	11-1/4° BEND
4	1.0	1.4	1.9	1.4	1.0	–	–
6	2.1	3.0	4.3	3.0	1.6	1.0	–
8	3.8	5.3	7.6	5.4	2.9	1.5	1.0
10	5.9	8.4	11.8	8.4	4.6	2.6	1.2
12	8.5	12.0	17.0	12.0	6.6	3.4	1.7
14	11.5	16.3	23.0	16.3	8.9	4.6	2.3
16	15.0	21.3	30.0	21.3	11.6	6.0	3.0
18	19.0	27.0	38.0	27.0	14.6	7.6	3.8
20	23.5	33.3	47.0	33.3	18.1	9.4	4.7
24	34.0	48.0	68.0	48.0	26.2	13.6	6.8

NOTES:
1. CONCRETE THRUST BLOCKING TO BE POURED AGAINST UNDISTURBED EARTH.
2. KEEP CONCRETE CLEAR OF JOINT AND ACCESSORIES.
3. REQUIRED BEARING AREAS AT FITTING SHALL BE AS NOTED ABOVE, UNLESS INDICATED OTHERWISE.
4. BEARING AREAS AND SPECIAL BLOCKING DETAILS SHOWN ON THE PLAN TAKE PRECEDENCE OVER BEARING AREAS AND BLOCKING DETAILS SHOWN ON THIS STANDARD PLATE.
5. ABOVE BEARING AREAS BASED ON TEST PRESSURES OF 150 PSI AND AN ALLOWABLE SOIL BEARING STRESS OF 2000 LBS. PER SQUARE FOOT. TO COMPUTE BEARING AREAS FOR DIFFERENT TEST PRESSURES AND SOIL BEARING STRESSES, USE THE FOLLOWING EQUATION: BEARING AREA = (TEST PRESSURE/150) X (2000/SOIL BEARING STRESS) X (TABLE VALUE).

Standard Plate Library City of Hanover | Title: Poured Concrete Thrust Blocking for Watermain | Date: 01-16 | Revised: | Plate No. WAT - 05

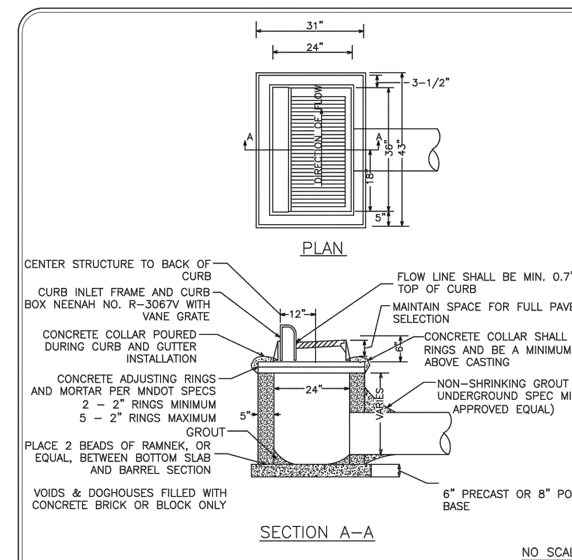

NOTES:
1. REINFORCING TO CONSIST OF #4 BARS @ 8" O.C., 4' MINIMUM LENGTH, EACH SIDE OF CASTING
2. GROUT BOTTOM TO DRAIN TO CENTER
3. PIPE CUT-OUTS TO BE LOCATED WHERE REQUIRED
4. INLET PROTECTION TO BE INSTALLED IN CATCH BASIN AND MAINTAINED AS DIRECTED BY THE ENGINEER
5. MORTAR SHALL MEET ASTM C270 AND ASTM C387 AND MNDOT SPECIFICATION 2506.2B

Standard Plate Library City of Hanover | Title: Standard Catch Basin | Date: 03-18 | Revised: | Plate No. STO - 01

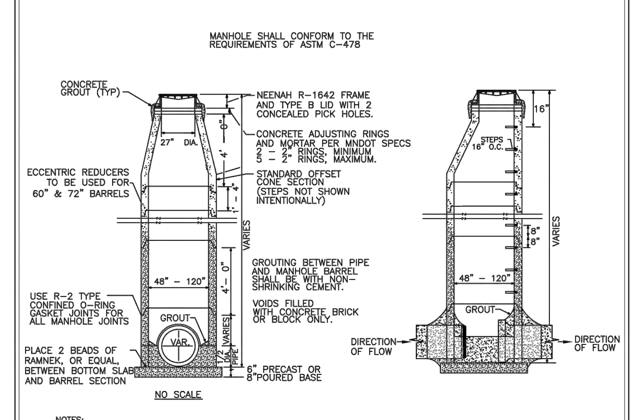

NOTES:
1. MANHOLE STEPS SHALL BE CAST ALUMINUM OR MA INDUSTRY WITH VINYL COATING OR APPROVED EQUIVALENT AND SHALL BE LOCATED ON THE DOWN STREAM SIDE OF THE MANHOLE
2. STEPS SHALL BE PLACED SO THAT THE OFFSET VERTICAL PORTION OF THE CONE IS FACING DOWN STREAM
3. MANHOLE COVER SHALL BE CAST WITH THE WORDS "STORM SEWER"
4. THE INITIAL AND FINAL RAISING OF CASTINGS SHALL BE CONSIDERED INCIDENTAL TO THE PROJECT
5. MAXIMUM DEPTH FROM TOP OF CASTING TO FIRST STEP SHALL NOT BE MORE THAN 16"
6. STEPS SHALL ALIGN WITH THE OPENING TO PROVIDE ACCESS TO THE MANHOLE
7. MORTAR SHALL MEET ASTM C270 AND ASTM C387 AND MNDOT SPECIFICATION 2506.2B

Standard Plate Library City of Hanover | Title: Standard Manhole for Storm Drain | Date: 03-18 | Revised: | Plate No. STO - 02

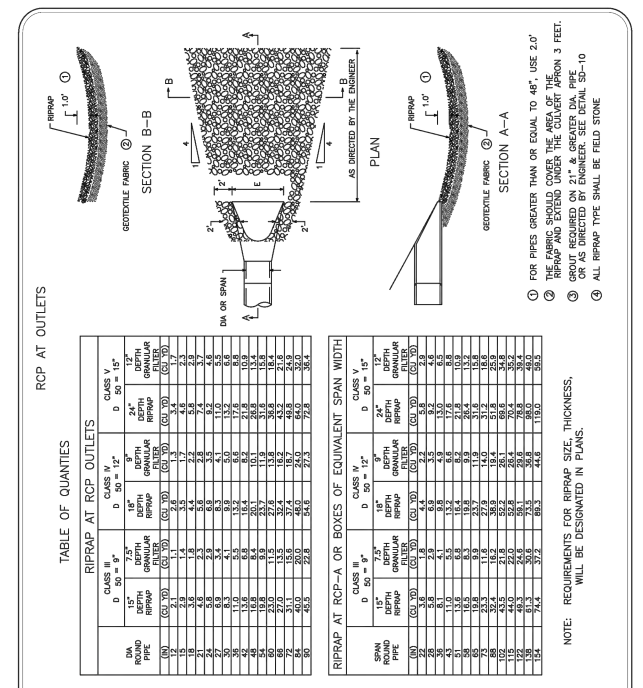

1. FOR PIPES GREATER THAN OR EQUAL TO 48", USE 2.0'
2. THE FABRIC SHOULD COVER THE AREA OF THE RIPRAP AND EXTEND UNDER THE CULVERT APRON 3 FEET.
3. GROUT REQUIRED ON 21" & GREATER DIA. PIPE OR AS DIRECTED BY ENGINEER. SEE DETAIL SD-10
4. ALL RIPRAP TYPE SHALL BE FIELD STONE

NOTE: REQUIREMENTS FOR RIPRAP SIZE, THICKNESS, WILL BE DESIGNATED IN PLANS.

Standard Plate Library City of Hanover | Title: Riprap Detail | Date: 01-16 | Revised: | Plate No. STO - 04

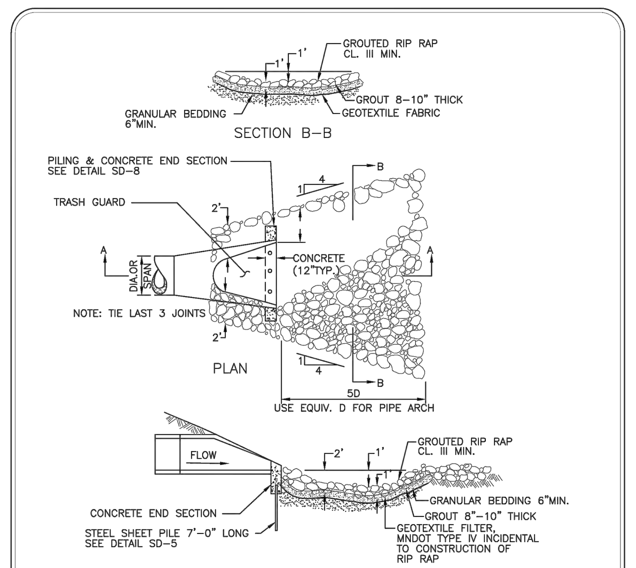

NOTE:
1. CONCRETE GROUT MATERIAL WILL BE USED ON ALL PIPE OUTLETS 21" DIA. OR LARGER.
2. PLACE RIPRAP INTO THE CONCRETE GROUT AFTER THE GROUT HAS BEEN PLACED AT A 8"-10" UNIFORM DEPTH.
3. DIMENSIONS AND C.Y. OF CONCRETE WILL BE DETERMINED BY ENGINEER.

Standard Plate Library City of Hanover | Title: Grouted Riprap at Outlets | Date: 01-16 | Revised: | Plate No. STO - 05

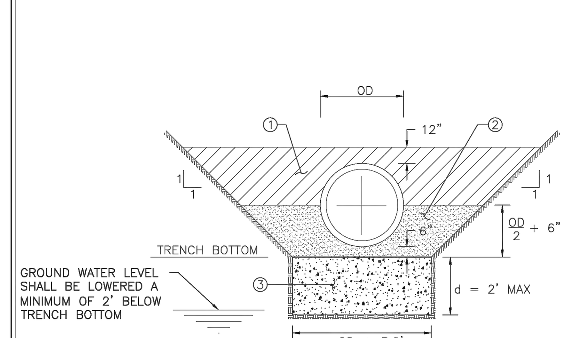

NOTES:
1. SELECTED MATERIAL (MNDOT SPEC 2451.3D) (INCIDENTAL)
2. GRANULAR PIPE BEDDING MATERIAL (MNDOT SPEC 3149.2F) (INCIDENTAL)
3. 1½" CLEAR AGGREGATE BEDDING. TO BE USED ONLY IN AREAS AS DIRECTED BY ENGINEER. (NO PAYMENT WILL BE MADE WITHOUT PRIOR APPROVAL FROM THE ENGINEER)

Standard Plate Library City of Hanover | Title: RCP Pipe Bedding Detail | Date: 01-16 | Revised: | Plate No. STO - 07

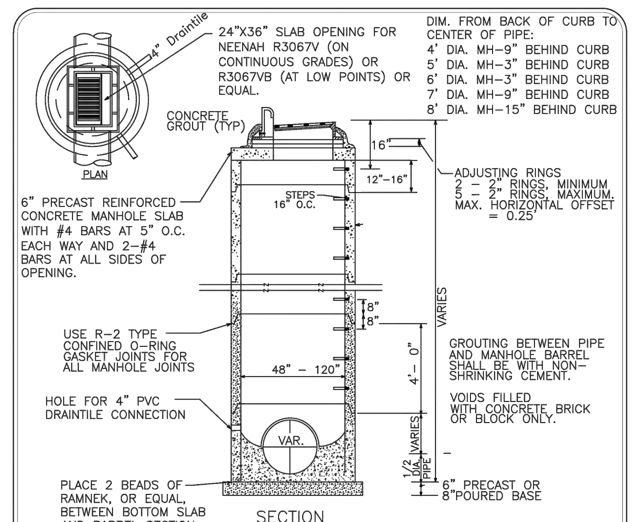

NOTES:
1. MANHOLE STEPS SHALL BE CAST ALUMINUM OR MA INDUSTRY WITH VINYL COATING OR APPROVED EQUIVALENT AND SHALL BE LOCATED ON THE DOWN STREAM SIDE OF THE MANHOLE
2. STEPS SHALL BE PLACED SO THAT THE OFFSET VERTICAL PORTION OF THE CONE IS FACING DOWN STREAM
3. MANHOLE COVER SHALL BE CAST WITH THE WORDS "STORM SEWER"
4. THE INITIAL AND FINAL RAISING OF CASTINGS SHALL BE CONSIDERED INCIDENTAL TO THE PROJECT
5. MAXIMUM DEPTH FROM TOP OF CASTING TO FIRST STEP SHALL NOT BE MORE THAN 16"
6. STEPS SHALL ALIGN WITH THE OPENING TO PROVIDE ACCESS TO THE MANHOLE
7. TOP BARREL SECTION BELOW TOP SLAB TO HAVE FLAT TOP EDGE SEALED WITH 2 BEADS OF RAMNEK OR EQUAL.

Standard Plate Library City of Hanover | Title: Catch Basin Manhole Type II | Date: 01-16 | Revised: | Plate No. STO - 10

SEE CITY PLATE NO. STO-09 FOR RIPRAP PLACEMENT.

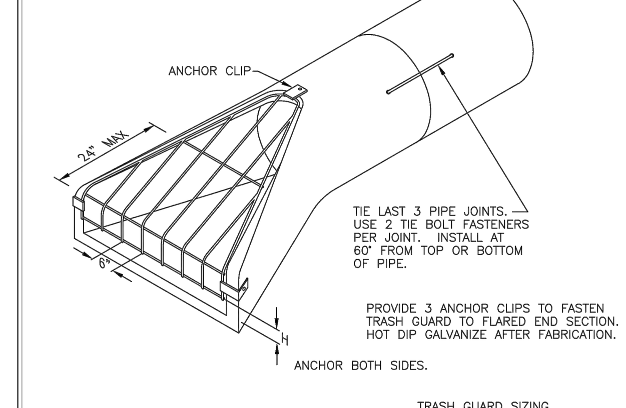

TRASH GUARD SIZING

PIPE SIZE	BARS	'H'	BOLTS
12"-18"	3/4"ø	4"	5/8"
21"-42"	1"ø	6"	3/4"
48"-72"	1 1/4"ø	12"	1"

Standard Plate Library City of Hanover | Title: Flared End Section And Trash Guard | Date: 01-16 | Revised: | Plate No. STO - 14

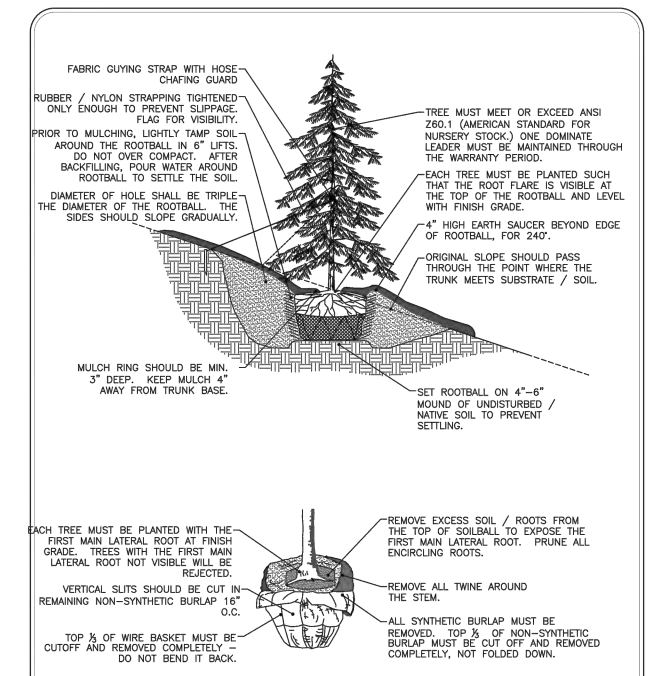

Standard Plate Library City of Hanover | Title: Planting Detail Coniferous Tree On Slope | Date: 01-16 | Revised: | Plate No. STR - 21

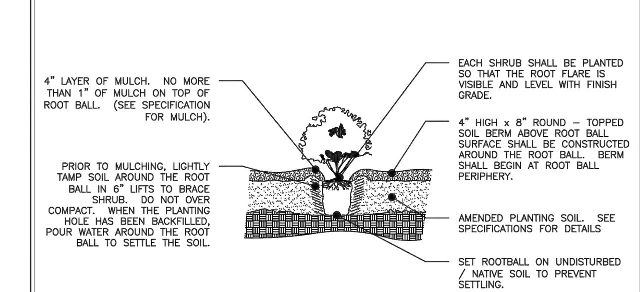

Standard Plate Library City of Hanover | Title: Planting Detail Shrub | Date: 01-16 | Revised: | Plate No. STR - 22

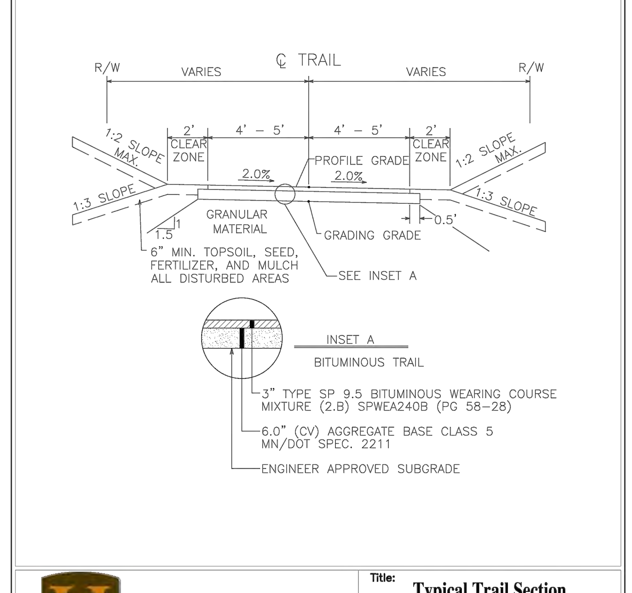

Standard Plate Library City of Hanover | Title: Typical Trail Section (8' - 10' Wide) | Date: 01-16 | Revised: | Plate No. STR - 13

FUTURE SEWER AND WATER LINES ARE TO BE EXTENDED BEYOND THE END OF THE STREET.
A HYDRANT & GATE VALVE SHALL BE PLACED AT THE END OF THE WATERMAIN.

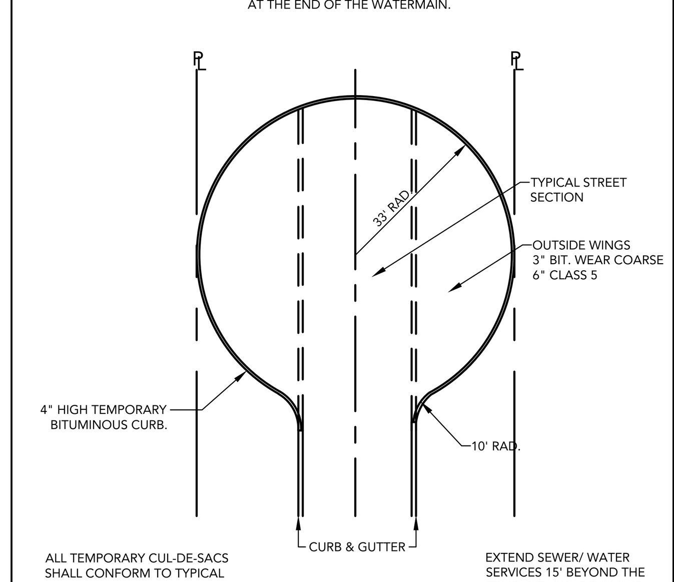

ALL TEMPORARY CUL-DE-SACS SHALL CONFORM TO TYPICAL STREET SECTION DETAILS.

EXTEND SEWER/ WATER SERVICES 15' BEYOND THE TEMP. BIT. CUL-DE-SAC. IF REQUIRED, INSTALL BARRICADES 10' BEYOND BITUMINOUS EDGE.

LOUCKS | TEMPORARY BITUMINOUS CUL-DE-SAC | LOUCKS PLATE NO. CUSTOM | DRAWN 7/2017

OUTLET CONTROL STRUCTURE ELEVATION TABLE

OCS NO.	A	B	C	D	E	F	G
OCS 1	968.0	972.1	970.00	978.4	978.4	48"	974.95

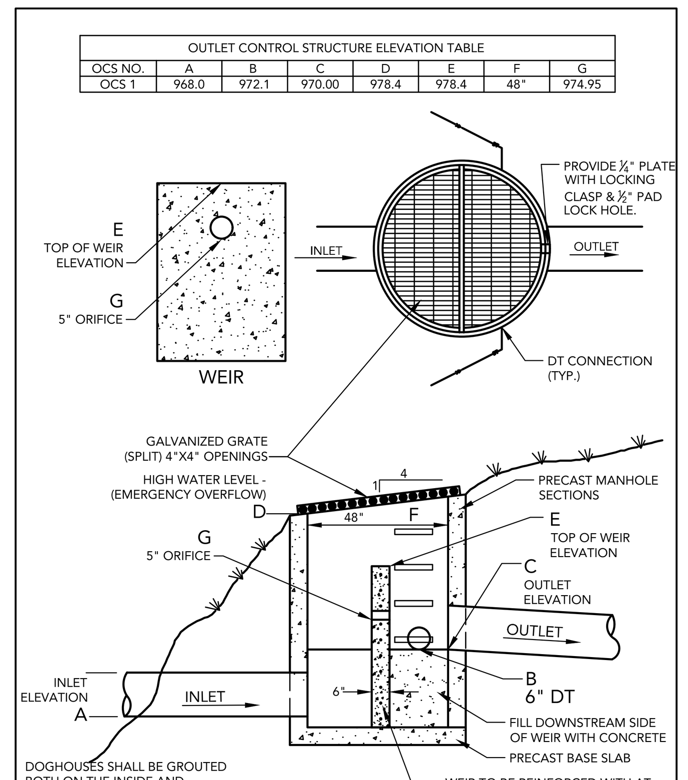

DOGHOUSES SHALL BE GROUTED BOTH ON THE INSIDE AND OUTSIDE OF THE STRUCTURE.

WEIR TO BE REINFORCED WITH AT LEAST #4 REBAR, 12" ON CENTER.

LOUCKS | OCS 1 | LOUCKS PLATE NO. - | DRAWN 4/2017

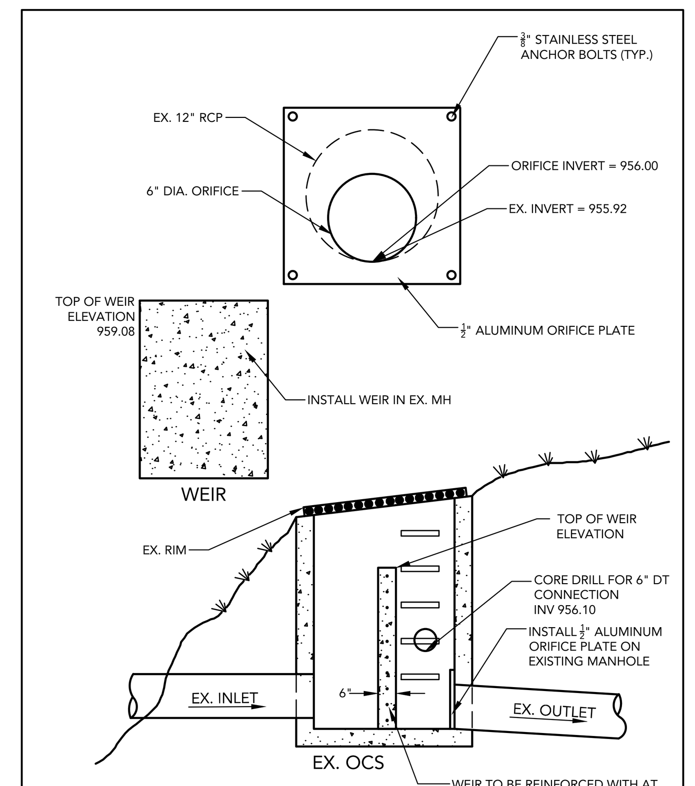

LOUCKS | EXISTING OCS - POND 4 MODIFICATION | LOUCKS PLATE NO. - | DRAWN 4/2018

OUTLET CONTROL STRUCTURE ELEVATION TABLE

OCS NO.	A	B	C	D	F
OCS 1	N/A	978.10	976.00	981.60	48"

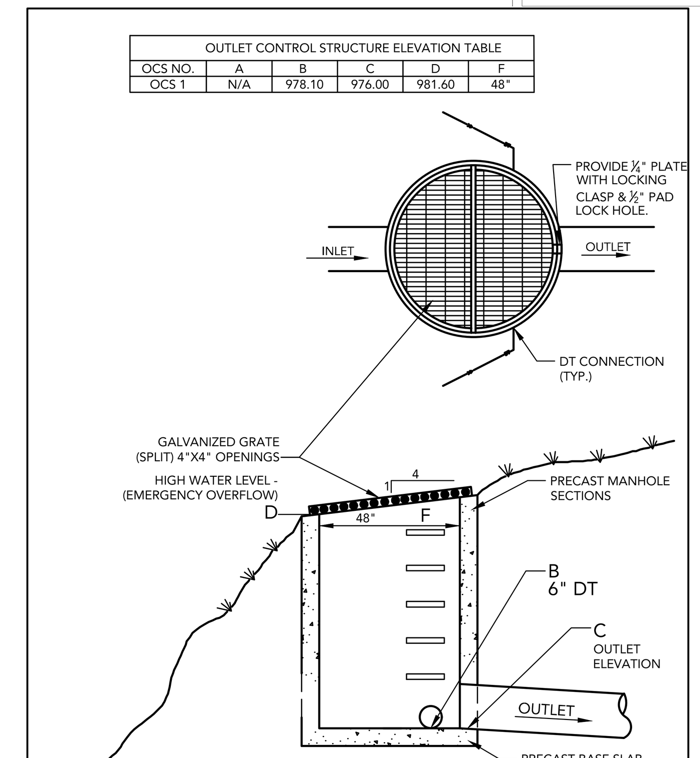

DOGHOUSES SHALL BE GROUTED BOTH ON THE INSIDE AND OUTSIDE OF THE STRUCTURE.

LOUCKS | OCS 6 | LOUCKS PLATE NO. - | DRAWN 4/2017

CATCH BASIN MANHOLE STRUCTURE ELEVATION TABLE

MH NO.	A	B	C	D	E
OCS 133	973.00	973.00	973.00	980.00	48"

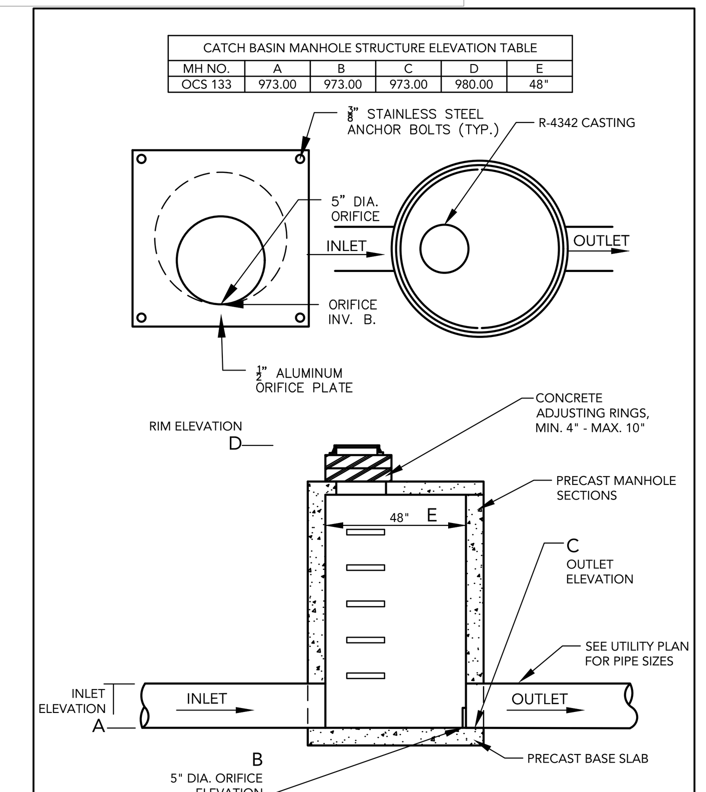

LOUCKS | CBMH 133 | LOUCKS PLATE NO. - | DRAWN 02/2017

BACKES COMPANIES
11413 ASHBURY CIRCLE N.
CHAMPLIN, MN 55316
PHONE: (612) 369-7750
FAX (612) 566-1525

LOUCKS
PLANNING
CIVIL ENGINEERING
LAND SURVEYING
LANDSCAPE ARCHITECTURE
ENVIRONMENTAL

7200 Hemlock Lane, Suite 300
Maple Grove, MN 55369
763.424.5505
www.loucksinc.com

CADD QUALIFICATION

CADD files prepared by the Consultant for this project are instruments of the Consultant professional services for use solely with respect to this project. These CADD files shall not be used on other projects, for additions to this project, or for completion of this project by others without written approval by the Consultant. With the Consultant's approval, others may be permitted to obtain copies of the CADD drawing files for information and reference only. All intentional or unintentional revisions, additions, or deletions to these CADD files shall be made at the full risk of that party making such revisions, additions or deletions and that party shall hold harmless and indemnify the Consultant from any & all responsibilities, claims, and liabilities.

SUBMITTAL/REVISIONS

04/20/18	CITY SUBMITTAL
05/24/18	CITY COMMENTS

PROFESSIONAL SIGNATURE

I hereby certify that this plan, specification or report was prepared by me or under my direct supervision and that I am a duly Licensed Professional Engineer under the laws of the State of Minnesota.

PRELIMINARY

License No. ... W. McLouth - PE 20383
Date

QUALITY CONTROL

Loucks Project No.	16101A
Project Lead	TWM
Drawn By	ZHW
Checked By	TWM
Review Date	05/24/18

SHEET INDEX

C0-1	COVER SHEET
C1-1	EXISTING CONDITIONS
C1-2	PRELIMINARY PLAT
C2-0 - C2-2	SITE PLAN
C3-0 - C3-2	GRADING PLAN
C3-3 - C3-5	SWPPP PLAN & NOTES
C4-0 - C4-2	UTILITY PLAN
C8-1 - C8-2	DETAILS
L0-1 - L0-3	TREE PRESERVATION
L0-4	TREE INVENTORY
L1-1 - L1-2	LANDSCAPE PLANS
L2-1	LANDSCAPE DETAILS

DETAILS

C8-1

Plotted: 05 /25 / 2018 11:57 AM W:\2016\16101A\CADD DATA\CIVIL_dwg Sheet Files\C8-1 DETAILS

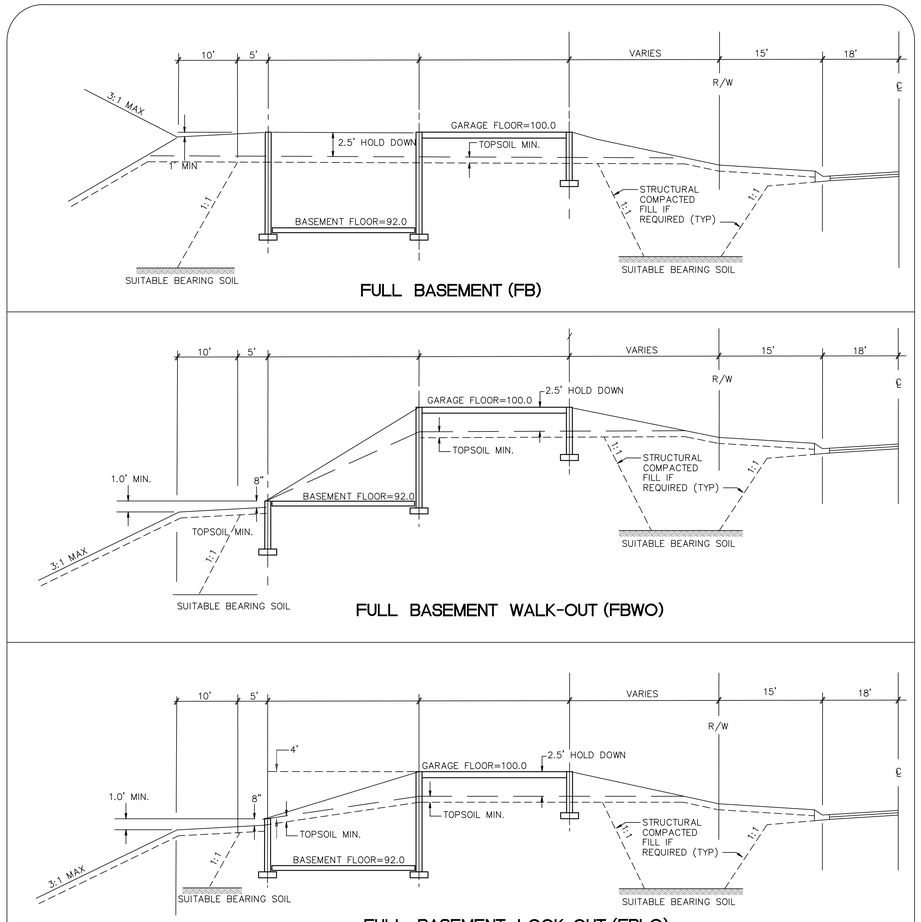

FULL BASEMENT (FB)

FULL BASEMENT WALK-OUT (FBWO)

FULL BASEMENT LOOK-OUT (FBLO)

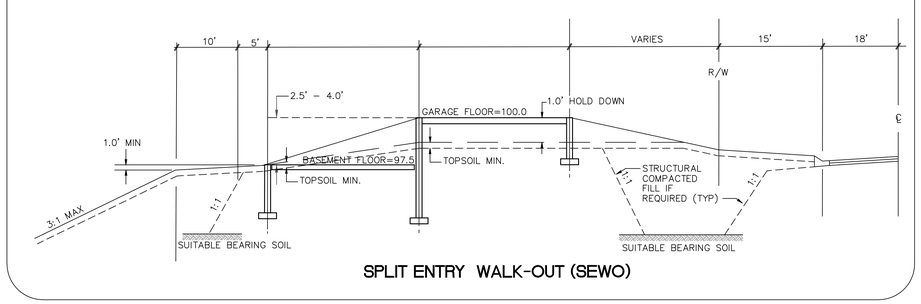

SPLIT ENTRY WALK-OUT (SEWO)

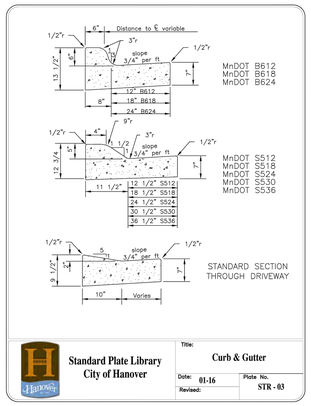

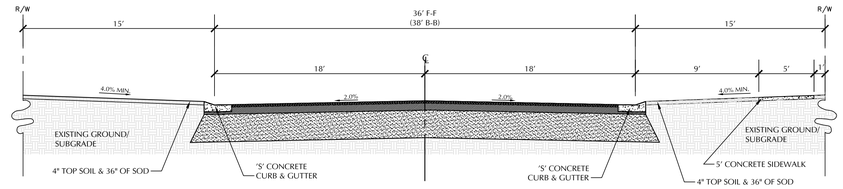

TYPICAL STREET SECTION
NOT TO SCALE

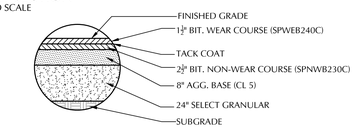

TYPICAL RESIDENTIAL STREET BITUMINOUS SECTION

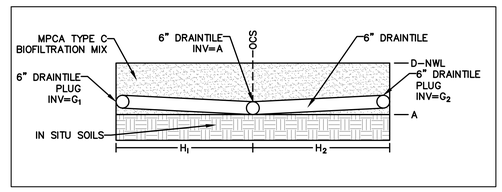

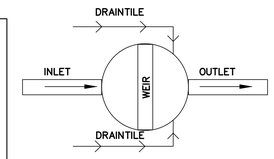

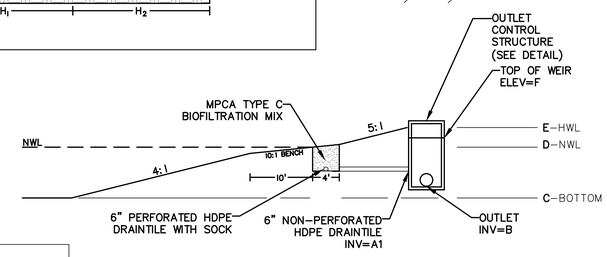

POND & FILTRATION BENCH DETAIL

POND & FILTRATION BENCH ELEVATION TABLE

POND NO.	A	A1	B	C	D	E	F	G_1	G_2	H_1	H_2
POND 1	972.60	971.10	970.00	965.00	974.60	978.20	978.40	973.10	973.10	635	502
POND 4	956.60	956.10	955.92	953.00	958.60	962.10	959.08	957.10	957.10	244	245
POND 6	978.60	978.10	976.00	974.00	980.60	981.50	N/A	979.10	979.10	204	144

CROW RIVER HEIGHTS WEST FUTURE ADD.

HANOVER, MN

BACKES COMPANIES
11413 ASHBURY CIRCLE N.
CHAMPLIN, MN 55316
PHONE: (612) 369-7750
FAX (612) 566-1525

LOUCKS
PLANNING
CIVIL ENGINEERING
LAND SURVEYING
LANDSCAPE ARCHITECTURE
ENVIRONMENTAL
7200 Hemlock Lane, Suite 300
Maple Grove, MN 55369
763.424.5505
www.loucksinc.com

CADD QUALIFICATION

CADD files prepared by the Consultant for this project are instruments of the Consultant professional services for use solely with respect to this project. These CADD files shall not be used on other projects, for additions to this project, or for completion of this project by others without written approval by the Consultant. The Consultant makes no representation as to the compatibility of these files with those of the CADD system of the information and reference only. All intentional or unintentional revisions, additions, or deletions to these CADD files shall be made at the full risk of that party making such revisions, additions or deletions and that party shall hold harmless and indemnify the Consultant from any & all responsibilities, claims, and liabilities.

SUBMITTAL/REVISIONS

04/20/18	CITY SUBMITTAL
05/24/18	CITY COMMENTS

PROFESSIONAL SIGNATURE

I hereby certify that this plan, specification, or report was prepared by me or under my direct supervision and that I am a duly Licensed Professional Engineer under the laws of the State of Minnesota.

PRELIMINARY

Licensed Name: Todd M. Louth - PE
Date:
License No. 20383

QUALITY CONTROL

Loucks Project No.	16101A
Project Lead	TWM
Drawn By	ZHW
Checked By	TWM
Review Date	05/24/18

SHEET INDEX

C0-1	COVER SHEET
C1-1	EXISTING CONDITIONS
C1-2	PRELIMINARY PLAT
C2-0 - C2-2	SITE PLAN
C3-0 - C3-2	GRADING PLAN
C3-3 - C3-5	SWPPP PLAN & NOTES
C4-0 - C4-2	UTILITY PLAN
C8-1 - C8-2	DETAILS
L0-1 - L0-3	TREE PRESERVATION
L0-4	TREE INVENTORY
L1-1 - L1-2	LANDSCAPE PLANS
L2-1	LANDSCAPE DETAILS

DETAILS

C8-2

Plotted: 05/25/2018 11:57 AM W:\2016\16101A\CADD DATA\CIVIL\ dwg Sheet Files\C8-1 DETAILS

178 East 9th Street Suite #200 | St. Paul, MN 55101 | (651) 286-8450

Memorandum

To: ***Cindy Nash – Hanover City Planner***

From: ***Justin Messner, PE – Hanover City Engineer***

Cc: ***Brian Hagen – Hanover City Administrator***
Todd McLouth, PE – Loucks, Inc.

Date: ***June 11, 2018***

Re: ***Crow River Heights West Future Additions Preliminary Plat Review***
Crow River Heights West 4th Addition Final Plat Review
WSB Project No. 011855-000

As requested, we have reviewed the revised Crow River Heights West future additions preliminary plat documents as prepared by Loucks, dated May 24, 2018, as well as Crow River Heights West 4th Addition Final Plat documents as prepared by Loucks, dated May 24, 2018 and we offer the following comments:

Stormwater Management

SWMP

1. Language noting that stormwater facilities will be public and maintained by the City should be added to the SWMP for future reference.

Plan Set

1. The City requires that the lowest floor opening elevation of any structure be at least two feet above the high water elevation. It appears this requirement is not being met around the existing wetlands onsite. The applicant should check all proposed structures and update the plans to meet the freeboard requirement.
2. Although the applicant has stated that the lowest opening of homes upstream from the EOFs are at least 1 foot above the EOF elevation at the backyard catch basins, the applicant still needs to model the backyard catch basins and EOFs and meet City freeboard requirements. As is, there is too large a risk to the adjacent proposed homes for flooding.
3. Draintile cleanouts should be called out on the Utility plans, or the symbol should be added to the legend.
4. Riprap should be added to FES 132.

HydroCAD Model and P8 Model

1. The lengths for the EOFs from Pond 6 should be revised in the HydroCAD model to be representative of what is shown on the grading plan (see attached).
2. The inputs for the HydroCAD model and for the P8 model should be consistent. Applicant should update the models so they are constant. The following inputs were found to be inconsistent between the two models:
    a. Pond 1 bottom elevation
    b. Pone 1 permanent pond volume
    c. Pond 4 bottom area
    d. Pond 6 bottom area
    e. Pond 6 permanent pond volume

Applicant should check all inputs to ensure all inputs into the two models are consistent with one another.

Preliminary Plan Set

Watermain Comments

1. The storm sewer is closer than 10' to the watermain on Jordan Avenue at STA 25+50.

Storm Sewer Comments

2. Increase the easements for the lots adjacent to storm sewer crossings exceeding 10' depth to meet a 1' to 1' ratio including;

    a. CBMH 141 to FES 142 (16'+ deep)

Grading Plan Comments

3. See attached red-lined plan sheets for locations of grading issues including those described below.

4. Many of the contours on the plan appear to be automatically generated and do not necessarily make logical sense with how they tie into existing contours and adjacent lots including;

    a. Lots 4,5,19,20 Block 15

5. Several contours are shown directing drainage into house pads including

    a. Lots 4,14,15,18,19 Block 3

    b. Lots 5,6 Block 5

    c. Lots 2,4,8 Block 7

    d. Lot 6 Block 11

    e. Lots 2,9 Block 13

    f. Lot 6,16 Block 14

    g. Lot 1,2,3,6,10,12,17,19,21,24 Block 15

6. Several drainage swales are shown running across private property without drainage and utility easements including;

    a. Lots 3,8-10,14-18 Block 10

    b. Lot 2,9 Block 13

    c. Lots 4-14,22 Block 15

7. Proposed contours do not blend into existing contours in several areas including;

    a. Lots 1-7 Block 11

    b. Blocks 1,2,8,9,11,12

Miscellaneous Comments

8. The cul de sac on the west end of Jasmine Avenue NE should follow the City's standard detail plate STR-05.

Final Plan Set (4th Addition)

See Comments above

Storm Sewer Comments

1. Provide the rational worksheet for storm sewer design.

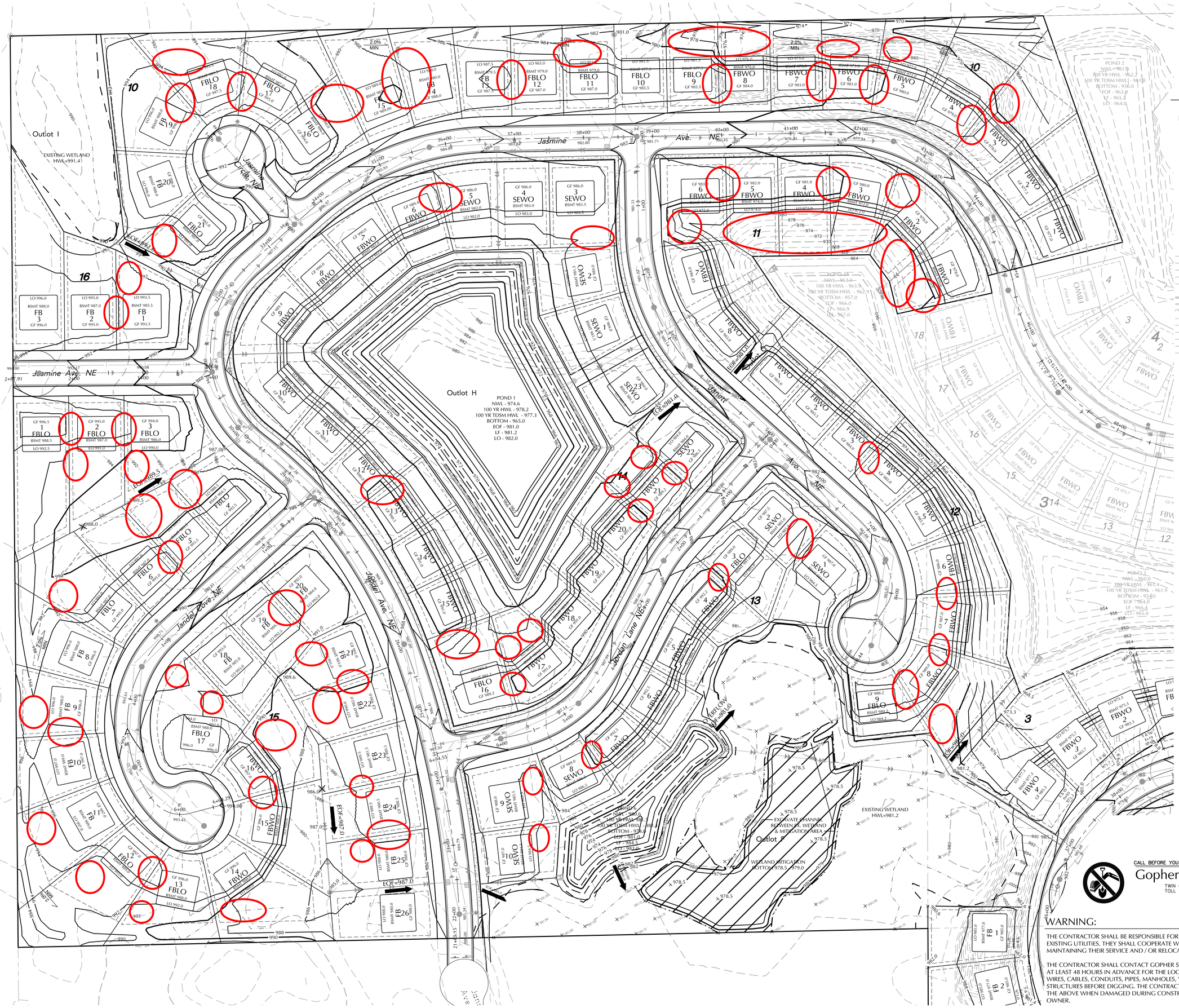

N

0 50 100
SCALE IN FEET

EXISTING	CIVIL LEGEND	PROPOSED
	SANITARY MANHOLE	
	STORM MANHOLE	
	CATCH BASIN	
	CULVERT	
	HYDRANT	
	GATEVALVE	
	POST INDICATOR VALVE	
	LIGHT POLE	
	POWER POLE	
	SIGN	
	BENCHMARK	
	SOIL BORINGS	
	WATER MANHOLE	
	TELEPHONE MANHOLE	
	UTILITY MANHOLE	
	ELECTRIC MANHOLE	
	WATER SERVICE	
	SANITARY SERVICE	
	HANDICAP PARKING	
	DIRECTION OF FLOW	
	SPOT ELEVATION	
	CONTOURS	
	SANITARY SEWER	
	STORM SEWER	
	WATERMAIN	
	FORCEMAIN	
	GRANITILE	
	SILT FENCE	
	CURB & GUTTER	
	RETAINING WALL	
	TREELINE	
	EASEMENT LINE	
	SETBACK LINE	
	FENCE LINE	
	UNDERGROUND TELE	
	UNDERGROUND GAS	
	OVERHEAD UTILITY	

CALL BEFORE YOU DIG!
Gopher State One Call
TWIN CITY AREA: 651-454-0002
TOLL FREE: 1-800-252-1166

WARNING:

THE CONTRACTOR SHALL BE RESPONSIBLE FOR CALLING FOR LOCATIONS OF ALL EXISTING UTILITIES. THEY SHALL COOPERATE WITH ALL UTILITY COMPANIES IN MAINTAINING THEIR SERVICE AND / OR RELOCATION OF LINES.

THE CONTRACTOR SHALL CONTACT GOPHER STATE ONE CALL AT 651-454-0002 AT LEAST 48 HOURS IN ADVANCE FOR THE LOCATIONS OF ALL UNDERGROUND WIRES, CABLES, CONDUITS, PIPES, MANHOLES, VALVES OR OTHER BURIED STRUCTURES BEFORE DIGGING. THE CONTRACTOR SHALL REPAIR OR REPLACE THE ABOVE WHEN DAMAGED DURING CONSTRUCTION AT NO COST TO THE OWNER.

CROW RIVER HEIGHTS WEST FUTURE ADD.

HANOVER, MN

BACKES COMPANIES
11413 ASHBURY CIRCLE N.
CHAMPLIN, MN 55316
PHONE: (612) 369-7750
FAX (612) 566-1525

LOUCKS
PLANNING
CIVIL ENGINEERING
LAND SURVEYING
LANDSCAPE ARCHITECTURE
ENVIRONMENTAL
7200 Hemlock Lane, Suite 300
Maple Grove, MN 55369
763.424.5505
www.loucksinc.com

CADD QUALIFICATION

CADD files prepared by the Consultant for this project are instruments of the Consultant's professional services for use solely with respect to this project. These CADD files shall not be used on other projects, for additions to this project, or for completion of this project by others without written approval by the Consultant. Only the original signature and seal/stamp shall be permitted to validate copies of the CADD drawing files for information and reference only. All intentional or unintentional revisions, additions, or deletions to these CADD files shall be made at the full risk of that party making such revisions, additions or deletions and that party shall hold harmless and indemnify the Consultant from any & all responsibilities, claims, and liabilities.

SUBMITTAL/REVISIONS

04/20/18	CITY SUBMITTAL
05/24/18	CITY COMMENTS

PROFESSIONAL SIGNATURE

I hereby certify that this plan, specification, or report was prepared by me or under my direct supervision and that I am a duly Licensed Professional Engineer under the laws of the State of Minnesota.

PRELIMINARY

Licensed Name: Tyler W. McLouth - PE
Date: 9 License No. 20383

QUALITY CONTROL

Loucks Project No.	16101A
Project Lead	TWM
Drawn By	ZHW
Checked By	TWM
Review Date	05/24/18

SHEET INDEX

C0-1	COVER SHEET
C1-1	EXISTING CONDITIONS
C1-2	PRELIMINARY PLAT
C2-0 - C2-2	SITE PLAN
C3-0 - C3-2	GRADING PLAN
C3-3 - C3-5	SWPPP PLAN & NOTES
C4-0 - C4-2	UTILITY PLAN
C8-1 - C8-2	DETAILS
L0-1 - L0-3	TREE PRESERVATION
L0-4	TREE INVENTORY
L1-1 - L1-2	LANDSCAPE PLANS
L2-1	LANDSCAPE DETAILS

NORTH GRADING PLAN

C3-1

Plotted: 05 /25 / 2018 11:54 AM W:\2016\16101A\CADD DATA\CIVIL_dwg Sheet Files\C3-1 GRADING PLAN

EXISTING	CIVIL LEGEND	PROPOSED
	SANITARY MANHOLE	
	STORM MANHOLE	
	CATCH BASIN	
	CULVERT	
	HYDRANT	
	GATEVALVE	
	POST INDICATOR VALVE	
	LIGHT POLE	
	POWER POLE	
	SIGN	
	BENCHMARK	
	SOIL BORINGS	
	WATER MANHOLE	
	TELEPHONE MANHOLE	
	UTILITY MANHOLE	
	ELECTRIC MANHOLE	
	WATER SERVICE	
	SANITARY SERVICE	
	HANDICAP PARKING	
	DIRECTION OF FLOW	
	SPOT ELEVATION	
	CONTOURS	
	SANITARY SEWER	
	STORM SEWER	
	WATERMAIN	
	FORCEMAIN	
	DRAINTILE	
	SILT FENCE	
	CURB & GUTTER	
	RETAINING WALL	
	TREELINE	
	EASEMENT LINE	
	SETBACK LINE	
	FENCE LINE	
	UNDERGROUND TELE	
	UNDERGROUND GAS	
	OVERHEAD UTILITY	

0 50 100
SCALE IN FEET

CALL BEFORE YOU DIG!
Gopher State One Call
TWIN CITY AREA: 651-454-0002
TOLL FREE: 1-800-252-1166

WARNING:

THE CONTRACTOR SHALL BE RESPONSIBLE FOR CALLING FOR LOCATIONS OF ALL EXISTING UTILITIES. THEY SHALL COOPERATE WITH ALL UTILITY COMPANIES IN MAINTAINING THEIR SERVICE AND / OR RELOCATION OF LINES.

THE CONTRACTOR SHALL CONTACT GOPHER STATE ONE CALL AT 651-454-0002 AT LEAST 48 HOURS IN ADVANCE FOR THE LOCATIONS OF ALL UNDERGROUND WIRES, CABLES, CONDUITS, PIPES, MANHOLES, VALVES OR OTHER BURIED STRUCTURES BEFORE DIGGING. THE CONTRACTOR SHALL REPAIR OR REPLACE THE ABOVE WHEN DAMAGED DURING CONSTRUCTION AT NO COST TO THE OWNER.

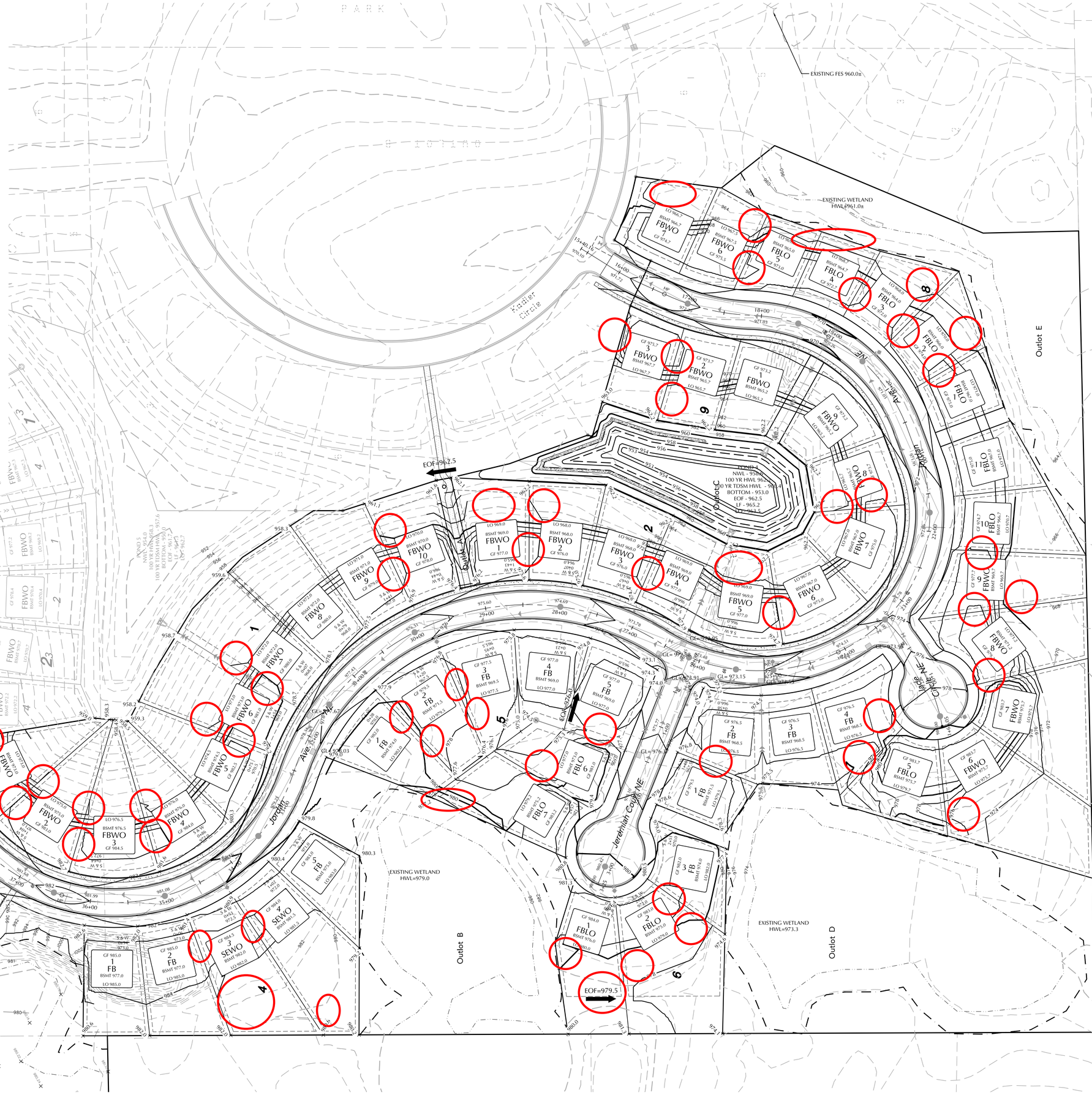

CROW RIVER HEIGHTS WEST FUTURE ADD.
HANOVER, MN

BACKES COMPANIES
11413 ASHBURY CIRCLE N.
CHAMPLIN, MN 55316
PHONE: (612) 369-7750
FAX (612) 566-1525

LOUCKS
PLANNING
CIVIL ENGINEERING
LAND SURVEYING
LANDSCAPE ARCHITECTURE
ENVIRONMENTAL
7200 Hemlock Lane, Suite 300
Maple Grove, MN 55369
763.424.5505
www.loucksinc.com

CADD QUALIFICATION

CADD files prepared by the Consultant for this project are instruments of the Consultant professional services for use solely with respect to this project. These CADD files shall not be used on other projects, for additions to this project, or for completion of this project by others without written approval by the Consultant. With the Consultant's approval, others may be permitted to obtain copies of the CADD drawing files for information and reference only. All intentional or unintentional revisions, additions, or deletions to these CADD files shall be made at the full risk of that party making such revisions, additions or deletions and that party shall hold harmless and indemnify the Consultant from any & all responsibilities, claims, and liabilities.

SUBMITTAL/REVISIONS

04/20/18	CITY SUBMITTAL
05/24/18	CITY COMMENTS

PROFESSIONAL SIGNATURE

I hereby certify that this plan, specification, or report was prepared by me or under my direct supervision and that I am a duly Licensed Professional Engineer under the laws of the State of Minnesota.

PRELIMINARY

Licensed Name: Zachary W. Hoffstedt South - PE
Date: License No. 20383

QUALITY CONTROL

Loucks Project No.	16101A
Project Lead	TWM
Drawn By	ZHW
Checked By	TWM
Review Date	05/24/18

SHEET INDEX

C0-1	COVER SHEET
C1-1	EXISTING CONDITIONS
C1-2	PRELIMINARY PLAT
C2-0 - C2-2	SITE PLAN
C3-0 - C3-2	GRADING PLAN
C3-3 - C3-5	SWPPP PLAN & NOTES
C4-0 - C4-2	UTILITY PLAN
C8-1 - C8-2	DETAILS
L0-1 - L0-3	TREE PRESERVATION
L0-4	TREE INVENTORY
L1-1 - L1-2	LANDSCAPE PLANS
L2-1	LANDSCAPE DETAILS

SOUTH GRADING PLAN

C3-2

Plotted: 05/25/2018 11:54 AM W:\2016\16101A\CADD DATA\CIVIL dwg Sheet Files\C3-1 GRADING PLAN

Collaborative Planning, LLC

MEMORANDUM

To: Brian Hagen, City Administrator

From: Cindy Nash, City Planner

Date: June 15, 2018

Subj: Planning Review Comments – Crow River Heights West Future Additions Preliminary Plat and Plans dated May 24, 2018

I have reviewed the preliminary/final plat and plans dated May 24, 2018 and have the following preliminary comments.

1. Engineering comments will be included within a separate memo.

2. A temporary cul-de-sac will be required at the end of Jasmine Avenue NE. Easements acceptable to the City Attorney should be provided for the cul-de-sac, and a cash escrow in an amount to be determined by the City Engineer should be provided for future removal of the temporary cul-de sacs.

3. A foundation as-built for each home will be required as a condition of approval of the Planned Residential Development.

4. Signage approved by the City will need to be placed along lot lines or corners next to storm ponds.

5. Deeds for conveyance of the outlots to the City shall be coordinated with final plat recording.

6. Sidewalks should be shown on one side of every street.

7. Trails should be constructed to connect Outlot A to the park (including across the City owned property at the eastern terminus of Outlot A), and across Outlot F.

8. Assuming the developer intended to convey Outlots F and I to the City, the City will need to determine if it is interested in future ownership of that portion of Outlots F and I that contains the wetland mitigation sites. This item can be resolved prior to approval of a final plat in order to be consistent with wetland

mitigation and any associated conditions approved by the Wright County SWCD. Financial surety and management of the mitigation sites will also need to be determined prior to final plat approval for the affected areas.

9. Street names are not approved, and will need to be reviewed prior to approval of the Final Plat.

cc: Justin Messner, WSB

Thomas R. Jones
540 Kadler Ave. NE
Hanover, MN 55341

5/23/18

City of Hanover
Planning Commission and City Council
11250 5th Street NE
Hanover, MN 55341

Dear Planning Commission and City Council,

I am writing to you in regard to the planning commission meeting scheduled on Wednesday, May 23rd, 2018 to discuss a proposed development plan for Crow River Heights West. The overall site plan I am referring to is labeled C2-0. Because I am unable to attend this meeting in person, I respectfully ask you to accept this letter as my formal statement on the issue.

As I reviewed the aerial photo with the planned area shaded in red and the site plan, I have the following concerns. I ask the planning commission to review each of these items and consider my suggestions. I will also present these to the City Council on Tuesday, June 5th if they are still unresolved.

1. The shaded area on aerial view sets its boarder on the edge of our finished yards. This is not an accurate depiction of the lot lines for 540 Kadler Ave. My official property line goes well into the wetland and at some points even extends beyond it. This problem also seems to exist on the overall site plan as it relates to Wetland 6. I am property number three along Kadler Ave. Though the shape of my property on the plan is correct, I want to be sure that the developer is aware of the wetlands that are included in my plot. These appear very separate when outlining wetland 6 on the plan.

2. No lot or housing dimensions were provided with the plan in the mailer to residents. As such, it looks as though they are very small and do not match the current setbacks as described in our city ordinance for R1A properties. If as a PUD, this plan is not subject to these setbacks, I hereby request the planning commission recommend that the council require these standard ordinances as part of the plan. When the last phase was approved, the developer asked for an 8 foot side yard setback. When this was approved, a member of the council specifically said this was a one-time deal and they expected the standard setbacks in all directions to be followed next time. Please hold the developers to this. (80 foot minimum lot width, 30 foot front yard, 10 foot side yards, 30 foot rear setback, and the structure at least 30 feet from wetlands.)

3. If you look at the site plan, proposed lot numbers 3-7 which come off Jordan Ave NE and line Wetland 6 could not possibly be accurate with regard to where the space for Jordan Ave NE currently sits. The ridge where these homes are proposed is only 30-40 feet wide. As such, normal homes with any type of yard will not fit or meet the setbacks. Additionally, homes are required to be at least 30 feet from wetlands. This is impossible as the plan is currently laid out. Either the developer is planning to move Jordan Ave NE, or they are selling a plan that is not aligned with current wetland setback requirements and city ordinances. Either way, this seems to again assume they have control over areas of plots 3-6 on Kadler Ave NE that are not properly represented. I ask that you make them publish the proposed lot and dwelling dimensions prior to the June 5th council meeting.

4. There are currently no additional parks or play structures in this proposal. If they want to add 200 houses, they must make room and plan for an additional playground. The one on Kadler Circle is not enough nor should it have to absorb the use of 400+ additional children. As a resident, I expect developers to plan these areas just as they were during the first phase of Crow River Heights.

5. I am all for additional development. However, please consider working with the school district to see what they can accommodate and how fast. If Hanover is adding 350-400 additional homes between two new developments within the next 2 years, how is Hanover Elementary able to accommodate this influx? Let's make sure we know how this will be solved before granting permits.

6. To be sure all parties know where lot lines are located, I request that all current homeowners with properties which abut the proposed development area have their property lines professionally surveyed and marked prior to any digging or construction. This should not be paid for by the homeowners, but rather by the developer.

7. Finally, due to the massive construction traffic that will be coming in and out, I request that the city require this traffic only enter and exit from Beebe Lake Road. We do not want this traffic flowing through Crow River Heights or Hanover Hills. There are MANY children and families on these streets walking and riding bikes. That number of large trucks is an extreme safety hazard.

Sincerely,
Thomas R. Jones
Resident
661-342-9576-Cell

Amy Biren

From: Cindy Nash <cnash@collaborative-planning.com>
Sent: Tuesday, May 15, 2018 1:58 PM
To: Kelly Baltzell; bhagen@ci.hanover.mn.us
Cc: Amy Biren
Subject: RE: Crow River Heights West Third Addition

Hi Kelly ---

I'm happy to pass along your comments to the Planning Commission. There is a network of sidewalks planned through this development.

Cindy Nash, AICP, EDFP
Collaborative Planning, LLC

Direct (763)473-0569
Cell (612)702-3845

PO Box 251, Medina, MN 55340

From: Kelly Baltzell <kelly@beyondindigo.com>
Sent: Tuesday, May 15, 2018 1:51 PM
To: Cindy Nash <cnash@collaborative-planning.com>; bhagen@ci.hanover.mn.us
Subject: Crow River Heights West Third Addition

Cindy and Brian,

I will not be able to attend the Public Hearing on Wednesday May 23rd. However, I would like to propose we have sidewalks in this division, places to throw away dog poop, and a dog park. Having lived in Hanover for 11 years now on Kadler Ave. N.E., a sidewalk would take pressure off the street for families/kids walking and cars. We have so many dogs, having a place for them to use versus the parks would be helpful as well. Please let me know how to have these considerations added to the agenda.

Thank you,

Kelly

KELLY BALTZELL, CEO
Beyond Indigo Marketing
kelly@beyondindigo.com
877.244.9322 x123

CITY OF HANOVER
COUNTIES OF WRIGHT AND HENNEPIN
STATE OF MINNESOTA

A regular meeting of the City Council of the City of Hanover, Minnesota, was called to order by Mayor Chris Kauffman at 6:00 p.m. in the Council Chambers of the City Hall, in the City of Hanover, Minnesota, on the 5th day of June, 2018.

The following Council Members were present:

The following Council Members were absent:

A motion to adopt the following resolution was made by _____ and seconded by _____.

RESOLUTION NO 06-19-18-67

A RESOLUTION APPROVING REZONING OF PROPERTY FOR A PLANNED UNIT DEVELOPMENT

WHEREAS, Backes Companies, Inc. ("Developer") is the applicant for an application related to property legally described as follows:

> Those parts of the Northeast Quarter of the Northeast Quarter, the Northwest Quarter of the Northeast Quarter, and the Southeast Quarter of the Northeast Quarter of Section 34, Township 120 North, Range 24 West, Wright County, Minnesota, lying westerly, northerly, southwesterly, westerly, southwesterly and westerly of the following described line:
>
> > Commencing at the Northeast corner of said Northeast Quarter; thence westerly, on an assumed bearing of South 88 degrees 52 minutes 51 seconds West, along the north line of said Northeast Quarter, a distance of 1151.45 feet to the point of beginning of the line to be described; thence South 19 degrees 21 minutes 05 seconds East a distance of 346.94 feet; thence South 76 degree 05 minutes 34 seconds West a distance of 201.00 feet; thence southerly 25.96 feet along a non-tangential curve concave to the west, said curve has a radius of 217.00 feet, a central angle of 6 degrees 51 minutes 15 seconds, and a chord that bears South 13 degrees 00 minutes 43 seconds East; thence South 77 degrees 38 minutes 43 seconds West, not tangent to said curve a distance of 140.00 feet; thence North 13 degrees 42 minutes 04 seconds West a distance of 48.00 feet; thence North 36 degrees 05 minutes 51 seconds West a distance of 48.00 feet; thence South 89 degrees 10 minutes 28 seconds West a distance of 170.00 feet; thence South 33 degrees 52 minutes 00 seconds East a distance of 75.00 feet; thence South 50 degrees 45 minutes 56 seconds East a distance of 120.00 feet; thence South 42 degrees 40 minutes 13 seconds East a distance of 273.00 feet; thence South 22 degrees 37 minutes 55 seconds East a distance of 141.00 feet; thence South 3 degrees 41 minutes 31 seconds West a distance of 108.00 feet; thence South 20 degrees 00 minutes 33 seconds East a distance of 57.00 feet; thence North 66 degrees 36 minutes 33 seconds East a distance of 159.00 feet; thence North 88 degrees 41 minutes 47 seconds East a distance of 122.00 feet; thence South 2 degrees 15 minutes 44 seconds East a distance of 135.00 feet; thence westerly 24.34 feet along a non-tangential curve concave to the south, said curve has a radius of 283.00 feet, a central angle of 4 degrees 55 minutes 42 seconds, and a chord that bears South 83

degrees 14 minutes 55 seconds West; thence South 9 degrees 12 minutes 56 seconds East, not tangent to said curve a distance of 256.00 feet; thence South 5 degrees 22 minutes 02 seconds West a distance of 45.00 feet; thence South 62 degrees 36 minutes 22 seconds East a distance of 75.00 feet; thence South 58 degrees 38 minutes 19 seconds East a distance of 97.00 feet; thence South 45 degrees 51 minutes 28 seconds East a distance of 96.00 feet; thence South 33 degrees 17 minutes 50 seconds East a distance of 113.00 feet to the west line of Block 3, CROW RIVER HEIGHTS WEST FIRST ADDITION, Wright County, Minnesota; thence on a bearing of SOUTH, a distance of 39.13 feet to a corner of Lot 6, said Block 3; thence southeasterly, northeasterly, easterly, southerly and southeasterly, along the southwesterly boundary of said CROW RIVER HEIGHTS WEST FIRST ADDITION, a distance of 945.55 feet to the most southerly corner of Lot 1, Block 5, said CROW RIVER HEIGHTS WEST FIRST ADDITION, which corner is also on the west line of Block 4, CROW RIVER HEIGHTS EAST THIRD ADDITION, said Wright County; thence southwesterly and southerly, along the westerly line of said CROW RIVER HEIGHTS EAST THIRD ADDITION, and said line extended, a distance of 428.09 feet, to the south line of said Southeast Quarter of the Northeast Quarter and there terminating.

(the "Subject Property"); and

WHEREAS, the property is zoned R-1A; and

WHEREAS, the Developer has applied for Planned Unit Development to develop the Subject Property in a manner similar to the existing neighborhood to the east; and

WHEREAS, the Developer has requested the PUD to allow for the construction of a 159-lot single-family residential neighborhood; and

WHEREAS, the Developer has requested a preliminary plat so as to allow the Developer to plat the Subject Property into various lots as shown on a preliminary for a development entitled Crow River Heights West Future Additions, the most recent revision of said preliminary and final plat and plans prepared by Loucks, Inc. and last updated May 24, 2018 (unless noted differently below) and containing the following sheets:

1. C0-1 Title Sheet
2. C1-1 Existing Conditions
3. C1-2 Preliminary Plat
4. C2-0 – C2-2 Site Plan
5. C3-0 – C3-2 Grading Plan
6. C3-3 – C3-5 SWPP Plan and Notes
7. C4-0 – C4-2 Utility Plan
8. C8-1 – C8-2 Details
9. L0-1 –L0-3 Tree Preservation
10. L1-1 – L1-2 Landscape Plans
11. L2-1 Landscape Details

(the "Site Plans"); and

WHEREAS, a public hearing was properly noticed and scheduled for May 23, 2018; and

WHEREAS, the public hearing was held and the application was reviewed by the Planning Commission at its meeting on May 23, 2018. The Planning Commission recommended approval of the request; and

NOW, THEREFORE, BE IT RESOLVED, that the City Council does hereby make the following findings of fact:

1. The proposed PUD is consistent with the comprehensive plan guidance of Neighborhood Residential.

2. The PUD is designed to form a desirable and unified environment within its own boundaries in terms of relationship of structure and open space, circulation patterns, visual character and sufficiency of drainage and utilities. The proposed PUD consists of completion of the Crow River Heights neighborhood with single-family homes in a coving plan that is unified to the original PUD development that already was constructed. Taken together with the original development, it maintains a unified environment within its own boundaries and with the previous phases.

3. The proposed PUD is compatible with present and planned uses in the surrounding area. The proposed PUD maintains a compatible development pattern with the existing portions of Crow River Heights. Adjustments have been made to the plans previously approved to incorporate more recent ordinance requirements. In the 2000 plan, townhomes were also planned for the site but these have been removed from the current plans and replaced with single-family homes. The original design of the neighborhood including the coving of front yard setbacks is being maintained.

4. Exceptions to the standard requirements of the Zoning Ordinance are justified by the design in order to maintain the existing development pattern of the neighborhood. Lot size reductions are appropriate in order to have the non-usable (pond) areas included within outlots rather than lots for better control over what occurs within them.

5. This phase of the development is not dependent on other phases being completed.

6. The City has reviewed and considered the burden the PUD will create on parks, schools, streets, and other public facilities and utilities. An Environmental Assessment Worksheet was prepared for the development, and the City Council made a negative declaration on the need for an Environmental Impact Statement on June 5, 2018. While there will be an increase in traffic and school enrollment, these are within the amounts expected with new development. Parks and utilities have sufficient capacity to accommodate the additional users who will be paying their share of the system capacity

7. The PUD was designed to continue the existing development pattern of the neighborhood in the same manner as previously planned. Staff has reviewed the proposed development plans and find that they are generally in compliance with ordinances as modified by conditions in staff memos, which ordinances are sufficient to protect the environmental quality. Residents predominantly from the existing Crow River Heights and Whitetail Preserve neighborhood were opposed to the development of the property in general, or to specific proposed terms in the PUD and shared those opinions at the Planning Commission meeting on May 23, 2018.

BE IT FURTHER RESOLVED that the City Council hereby approves the application to rezone the property to R-1A/PUD subject to the following conditions:

1. A Developer's Agreement acceptable to the City is entered into by and between the Developer and the City.

2. Adoption and publication of the ordinance as required by law.

3. All conditions of the City Engineer, City Attorney and City Planner are met.

4. The development must be constructed in substantial conformance with the Site Plans.

5. Single-family homes are the permitted use on the lots.

6. Outlots containing stormwater ponding shall be owned and maintained by the City.

7. The developer must submit foundation as-builts for each home constructed for the review of the Building Official.

8. Each lot is required to have a minimum of two (2) trees per lot and five (5) shrubs per lot, all located within the front yard. All portions of a lot that do not have landscape beds shall be sodded.

9. Variations from the City's Zoning Ordinance requirements are approved as follows:
    a. The lot size is reduced to 7,930 square feet.
    b. The lot width is reduced to 64 feet.
    c. The rear yard setback shall vary as shown on the plans and in the table attached as Exhibit A.
    d. The front yard setbacks shall vary as shown on the plans and in the table attached as Exhibit A.
    e. The corner side setback shall vary as shown on the plans and in the table attached as Exhibit A.

10. All other requirements of the City's Zoning Ordinance not specifically exempted above must be met.

Council members voting in favor:

Opposed or abstained:

Adopted by the City Council this 19th day of June, 2018.

APPROVED BY:

_____

Chris Kauffman, Mayor

ATTEST:

_____

Brian Hagen, City Administrator

EXHIBIT A --- Lot Tabulation
Revised: 5-25-18

Block	Lot	Area (sf)	Width @ Front Setback	Front Setback	Rear Setback	Side Setback	Side Street Setback	House Pad Width	House Pad Depth
1	1	13167	106	30	30	10	N/A	55	50
	2	13232	107	30	30	10	N/A	55	50
	3	13236	107	30	30	10	N/A	55	50
	4	13459	104	30	30	10	N/A	55	50
	5	13706	97	35	30	10	N/A	55	50
	6	16530	76	35	30	10	N/A	55	50
	7	16226	76	37	30	10	N/A	55	50
	8	15525	77	40	30	10	N/A	55	50
	9	13936	78	43	30	10	N/A	55	50
	10	12385	78	41	30	10	N/A	55	50
2	1	11965	79	30	30	10	N/A	55	50
	2	11476	79	30	30	10	N/A	55	50
	3	11071	79	30	30	10	N/A	55	50
	4	9952	80	30	30	10	N/A	55	50
	5	11784	113	30	30	10	N/A	55	50
	6	11438	112	30	30	10	N/A	55	50
	7	10848	126	25	30	10	N/A	55	50
	8	9219	89	25	20	10	N/A	55	50
	9	10304	114	25	20	10	N/A	55	50
3	1	12134	79	45	30	10	N/A	55	50
	2	13556	79	45	30	10	N/A	55	50
	3	14838	79	45	30	10	N/A	55	50
	4	14686	79	45	30	10	N/A	55	50
4	1	11591	75	30	30	10	N/A	55	50
	2	13480	75	30	30	10	N/A	55	50
	3	17092	75	40	30	10	N/A	55	50
	4	19716	75	40	30	10	N/A	55	50
	5	10436	75	30	20	10	N/A	55	50
5	1	11838	98	30	30	10	N/A	55	50
	2	12023	93	30	30	10	N/A	55	50
	3	11441	93	30	30	10	N/A	55	50
	4	10175	93	30	20	10	N/A	55	50
	5	11315	95	30	20	10	25	55	50
	6	10838	86	25	30	10	N/A	55	50
	7	13944	77	25	30	10	N/A	55	50
6	1	14982	71	25	30	10	N/A	50	50
	2	23736	77	25	30	10	N/A	55	50
	3	9720	84	25	10	10	N/A	55	50
	1	8044	75	25	10	10	N/A	55	50
	2	10111	91	30	10	10	25	55	50

EXHIBIT A ---- Lot Tabulation
Revised: 5-25-18

Block	Lot	Area (sf)	Width @ Front Setback	Front Setback	Rear Setback	Side Setback	Side Street Setback	House Pad Width	House Pad Depth
7	3	10430	75	30	20	10	N/A	55	50
	4	12362	98	30	10	10	30	55	50
	5	12307	77	25	20	10	N/A	55	50
	6	25873	77	25	30	10	N/A	55	50
	7	18974	77	25	30	10	N/A	55	50
	8	16660	107	25	30	10	N/A	55	50
	9	14432	84	25	30	10	N/A	55	50
	10	12316	75	25	30	10	N/A	55	50
	11	9022	75	25	20	10	N/A	55	50
8	1	7516	70	25	10	10	N/A	50	50
	2	10294	75	25	20	10	N/A	55	50
	3	9889	75	25	20	10	N/A	55	50
	4	7342	75	25	10	10	N/A	55	45
	5	7574	75	25	10	10	N/A	55	45
	6	9039	75	25	20	10	N/A	55	50
	7	10885	97	25	20	10	30	55	50
9	1	10107	88	25	30	10	N/A	55	50
	2	9563	77	25	30	10	N/A	55	50
	3	9954	77	25	30	10	N/A	55	50
10	1	11490	75	30	30	10	N/A	55	50
	2	12314	75	30	30	10	N/A	55	50
	3	17170	75	30	30	10	N/A	55	50
	4	18589	75	32	30	10	N/A	55	50
	5	12928	75	32	30	10	N/A	55	50
	6	10718	75	30	30	10	N/A	55	50
	7	9750	75	30	30	10	N/A	55	50
	8	9750	75	30	30	10	N/A	55	50
	9	9750	75	30	30	10	N/A	55	50
	10	9750	75	30	30	10	N/A	55	50
	11	9750	75	30	30	10	N/A	55	50
	12	9750	75	30	30	10	N/A	55	50
	13	10195	75	30	30	10	N/A	55	50
	14	11310	75	30	30	10	N/A	55	50
	15	13642	75	30	30	10	N/A	55	50
	16	13141	96	30	20	10	30	55	50
	17	14344	77	30	30	10	N/A	55	50
	18	13964	77	30	30	10	N/A	55	50
	19	16615	77	30	30	10	N/A	55	50
	20	11668	76	30	20	10	N/A	55	50
	21	12462	96	30	20	10	30	55	50

EXHIBIT A ---- Lot Tabulation
Revised: 5-25-18

Block	Lot	Area (sf)	Width @ Front Setback	Front Setback	Rear Setback	Side Setback	Side Street Setback	House Pad Width	House Pad Depth
11	1	11344	101	30	30	10	N/A	55	50
	2	10896	104	30	30	10	N/A	55	50
	3	11033	75	30	30	10	N/A	55	50
	4	10802	75	30	30	10	N/A	55	50
	5	10340	75	30	30	10	N/A	55	50
	6	11676	95	30	20	10	30	55	50
	7	10361	101	25	20	10	N/A	55	50
	8	10619	94	25	30	10	N/A	55	50
12	1	9230	70	30	30	10	N/A	50	50
	2	9240	70	30	30	10	N/A	50	50
	3	8795	70	30	20	10	N/A	50	50
	4	9366	75	30	20	10	N/A	55	50
	5	10298	75	30	20	10	N/A	55	50
	6	11125	75	30	30	10	N/A	55	50
	7	11979	75	30	30	10	N/A	55	50
	8	15626	77	30	30	10	N/A	55	50
	9	8649	78	25	10	10	N/A	55	45
13	1	12514	99	25	30	10	25	55	50
	2	9890	90	25	20	10	25	55	50
	3	9409	75	25	30	10	N/A	55	50
	4	9122	75	25	20	10	N/A	55	50
	5	7908	88	25	10	10	N/A	55	45
	6	8580	76	25	20	10	N/A	55	50
	7	8794	75	25	20	10	N/A	55	50
	8	8794	75	25	20	10	N/A	55	50
	9	11201	95	30	20	10	30	55	50
	10	8960	75	30	20	10	N/A	55	50
14	1	9940	75	30	20	10	N/A	55	50
	2	10118	75	30	20	10	N/A	55	50
	3	11879	95	30	30	10	30	55	50
	4	9461	75	30	30	10	N/A	55	50
	5	9899	87	30	20	10	N/A	55	50
	6	9757	88	30	20	10	N/A	55	50
	7	9778	86	30	20	10	N/A	55	50
	8	9315	75	30	20	10	N/A	55	50
	9	11959	136	30	20	10	N/A	55	50
	10	11855	137	30	20	10	N/A	55	50
	11	9130	75	30	20	10	N/A	55	50
	12	9406	75	30	20	10	N/A	55	50
	13	9734	75	30	20	10	N/A	55	50

EXHIBIT A ---- Lot Tabulation
Revised: 5-25-18

Block	Lot	Area (sf)	Width @ Front Setback	Front Setback	Rear Setback	Side Setback	Side Street Setback	House Pad Width	House Pad Depth
	14	9951	75	30	30	10	N/A	55	50
	15	10611	75	30	30	10	N/A	55	50
	16	13145	95	25	30	10	30	55	50
	17	10807	106	25	30	10	N/A	55	50
	18	9446	75	25	20	10	N/A	55	50
	19	8773	70	25	20	10	N/A	50	50
	20	9199	75	25	20	10	N/A	55	50
	21	9531	75	25	30	10	N/A	55	50
	22	11622	95	25	30	10	30	55	50
	23	10447	75	30	20	10	N/A	55	50
15	1	17544	80	30	30	10	N/A	55	50
	2	14281	80	30	30	10	N/A	55	50
	3	15284	114	30	30	10	30	55	50
	4	11671	95	30	20	10	30	55	50
	5	10254	75	30	30	10	N/A	55	50
	6	11818	75	30	30	10	N/A	55	50
	7	16244	70	30	30	10	N/A	50	50
	8	13483	71	30	30	10	N/A	50	50
	9	11222	75	30	30	10	N/A	55	50
	10	11777	75	30	30	10	N/A	55	50
	11	16767	75	30	30	10	N/A	55	50
	12	21468	75	30	30	10	N/A	55	50
	13	14738	77	30	30	10	N/A	55	50
	14	19994	77	30	30	10	N/A	55	50
	15	14730	77	30	30	10	N/A	55	50
	16	15387	76	30	30	10	N/A	55	50
	17	16473	166	30	25	10	30	55	50
	18	10093	75	30	30	10	N/A	55	50
	19	9134	75	30	20	10	N/A	55	50
	20	12387	102	30	20	10	N/A	55	50
	21	10312	81	30	30	10	N/A	55	50
	22	10478	78	30	30	10	N/A	55	50
	23	10328	78	30	30	10	N/A	55	50
	24	11006	78	30	30	10	N/A	55	50
	25	11356	78	30	30	10	N/A	55	50
	26	11394	78	30	30	10	N/A	55	50
16	1	12712	106	30	20	10	30	55	50
	2	11877	75	30	30	10	N/A	55	50
	3	17538	75	30	30	10	N/A	55	50

CITY OF HANOVER
COUNTIES OF WRIGHT AND HENNEPIN
STATE OF MINNESOTA

A regular meeting of the City Council of the City of Hanover, Minnesota, was called to order by Mayor Chris Kauffman at 6:00 p.m. in the Council Chambers of the City Hall, in the City of Hanover, Minnesota, on the 19th day of June, 2018.

The following Council Members were present:

The following Council Members were absent:

A motion to adopt the following resolution was made by _____ and seconded by _____.

RESOLUTION NO 06-19-18-68

A RESOLUTION APPROVING A PRELIMINARY PLAT FOR A PROJECT KNOWN AS CROW RIVER HEIGHTS WEST FUTURE ADDITIONS

WHEREAS, Backes Companies, Inc. ("Developer") is the applicant for an application related to property legally described as follows:

> Those parts of the Northeast Quarter of the Northeast Quarter, the Northwest Quarter of the Northeast Quarter, and the Southeast Quarter of the Northeast Quarter of Section 34, Township 120 North, Range 24 West, Wright County, Minnesota, lying westerly, northerly, southwesterly, westerly, southwesterly and westerly of the following described line:
>
> > Commencing at the Northeast corner of said Northeast Quarter; thence westerly, on an assumed bearing of South 88 degrees 52 minutes 51 seconds West, along the north line of said Northeast Quarter, a distance of 1151.45 feet to the point of beginning of the line to be described; thence South 19 degrees 21 minutes 05 seconds East a distance of 346.94 feet; thence South 76 degree 05 minutes 34 seconds West a distance of 201.00 feet; thence southerly 25.96 feet along a non-tangential curve concave to the west, said curve has a radius of 217.00 feet, a central angle of 6 degrees 51 minutes 15 seconds, and a chord that bears South 13 degrees 00 minutes 43 seconds East; thence South 77 degrees 38 minutes 43 seconds West, not tangent to said curve a distance of 140.00 feet; thence North 13 degrees 42 minutes 04 seconds West a distance of 48.00 feet; thence North 36 degrees 05 minutes 51 seconds West a distance of 48.00 feet; thence South 89 degrees 10 minutes 28 seconds West a distance of 170.00 feet; thence South 33 degrees 52 minutes 00 seconds East a distance of 75.00 feet; thence South 50 degrees 45 minutes 56 seconds East a distance of 120.00 feet; thence South 42 degrees 40 minutes 13 seconds East a distance of 273.00 feet; thence South 22 degrees 37 minutes 55 seconds East a distance of 141.00 feet; thence South 3 degrees 41 minutes 31 seconds West a distance of 108.00 feet; thence South 20 degrees 00 minutes 33 seconds East a distance of 57.00 feet; thence North 66 degrees 36 minutes 33 seconds East a distance of 159.00 feet; thence North 88 degrees 41 minutes 47 seconds East a distance of 122.00 feet; thence South 2 degrees 15 minutes 44 seconds East a distance of 135.00 feet; thence westerly 24.34 feet along a non-tangential curve concave to the south, said curve has a radius of 283.00 feet, a central angle of 4 degrees 55 minutes 42 seconds, and a chord that bears South 83

degrees 14 minutes 55 seconds West; thence South 9 degrees 12 minutes 56 seconds East, not tangent to said curve a distance of 256.00 feet; thence South 5 degrees 22 minutes 02 seconds West a distance of 45.00 feet; thence South 62 degrees 36 minutes 22 seconds East a distance of 75.00 feet; thence South 58 degrees 38 minutes 19 seconds East a distance of 97.00 feet; thence South 45 degrees 51 minutes 28 seconds East a distance of 96.00 feet; thence South 33 degrees 17 minutes 50 seconds East a distance of 113.00 feet to the west line of Block 3, CROW RIVER HEIGHTS WEST FIRST ADDITION, Wright County, Minnesota; thence on a bearing of SOUTH, a distance of 39.13 feet to a corner of Lot 6, said Block 3; thence southeasterly, northeasterly, easterly, southerly and southeasterly, along the southwesterly boundary of said CROW RIVER HEIGHTS WEST FIRST ADDITION, a distance of 945.55 feet to the most southerly corner of Lot 1, Block 5, said CROW RIVER HEIGHTS WEST FIRST ADDITION, which corner is also on the west line of Block 4, CROW RIVER HEIGHTS EAST THIRD ADDITION, said Wright County; thence southwesterly and southerly, along the westerly line of said CROW RIVER HEIGHTS EAST THIRD ADDITION, and said line extended, a distance of 428.09 feet, to the south line of said Southeast Quarter of the Northeast Quarter and there terminating.

(the "Subject Property"); and

WHEREAS, the property is zoned R-1A, with a Planned Unit Development; and

WHEREAS, the Developer has requested a preliminary and final plat so as to allow the Developer to plat the Subject Property into various lots as shown on a preliminary and final plat for a development entitled Crow River Heights West Third Addition, the most recent revision of said preliminary and final plat and plans prepared by Loucks, Inc. and last updated May 24, 2018 (unless noted differently below) and containing the following sheets:

1. C0-1 Title Sheet
2. C1-1 Existing Conditions
3. C1-2 Preliminary Plat
4. C2-0 – C2-2 Site Plan
5. C3-0 – C3-2 Grading Plan
6. C3-3 – C3-5 SWPP Plan and Notes
7. C4-0 – C4-2 Utility Plan
8. C8-1 – C8-2 Details
9. L0-1 –L0-3 Tree Preservation
10. L1-1 – L1-2 Landscape Plans
11. L2-1 Landscape Details

(the "Site Plans"); and

WHEREAS, a public hearing was properly noticed and scheduled for May 23, 2018; and

WHEREAS, the public hearing was held and the application was reviewed by the Planning Commission at its meeting on May 23, 2018. The Planning Commission recommended approval of the request; and

NOW, THEREFORE, BE IT RESOLVED that the City Council hereby approves the application for a Preliminary Plat and Final Plat subject to the following conditions:

1. All comments contained within the memo from WSB dated June 11, 2018 and the memo from Collaborative Planning dated June 15, 2018 are incorporated herein (collectively referred to as the "Staff Memos").

2. The Subject Property shall be constructed in substantial compliance with the Site Plans as revised to conform to the requirements of the Staff Memos.

3. No construction shall be permitted on the Subject Property until updated Site Plans addressing the comments of the Staff Memos and the conditions of this Resolution are provided for review and approval by the City Engineer and City Planner.

4. To the extent that there are differences or conflicts between the Site Plans and this resolution, the terms of this resolution shall be controlling.

5. A title commitment shall be provided for the review of the City Attorney before the final plat is released for recording.

6. Financial security in a form approved by the City Attorney and in an amount approved by the City Engineer must be provided by the Developer prior to release of the final plat for recording. The Developer's Agreement shall specify the amount of the financial security.

7. The Developer must reimburse the City for all costs incurred by the City and its consultants in relation to review of the proposed development plans as well as the preparation of the Developer's Agreement.

8. Any new utility lines installed to serve the Subject Property are required to be placed underground.

9. The Developer shall be responsible for securing necessary easements and for constructing all streets, utility, trail, stormwater, and other improvements shown on the Approved Construction Plans at their own expense. However, to the extent that such utilities are oversized at the request of the City, the City shall reimburse the Developer for the cost of the extra diameter of the pipe. All reimbursements by the City under this paragraph are subject to the submittal by the Developer of the engineer's estimate and other supporting information as requested by the City. The engineer's estimate will be reviewed by the City to verify that the costs requested for reimbursement are reasonable at the sole determination of the City, and the amount determined by the City to be eligible for reimbursement shall be included within the Developers Agreement.

10. The Developer shall be responsible for obtaining and complying with all necessary permits from the Wright County Soil and Water Conservation District, Minnesota Department of Health, DNR, MPCA, and any other governmental agencies prior to commencement of development activities on the site.

11. The Developer shall incorporate the standards and procedures of the Best Management Practices Handbook for site restoration and erosion control measures during the construction process.

12. The Developer must submit details on corrected building pads including compaction tests, limits of the pads and elevations of the excavations. The general soils report for the development must also be submitted to the City Engineer for review and approval prior to the issuance of building permits.

13. Park dedication, sanitary sewer trunk, water trunk, storm sewer trunk and storm warning siren fees shall be paid prior to release of the final plat for recording as per the City fee schedule in effect at the time of the execution of the Developer's Agreement.

14. The Developer shall survey all storm water holding ponds (if any are constructed) as required by the City. The Developer shall be responsible for storm sewer cleaning and holding pond dredging, as required, by the City prior to completion of the development of the Subject Property.

15. Additional conditions as determined necessary by the City Planner, City Engineer, and City Attorney as review of the project progresses and is completed.

Council members voting in favor:

Opposed or abstained:

Adopted by the city Council this 19th day of June, 2018.

APPROVED BY:

_____

Chris Kauffman, Mayor

ATTEST:

_____

Brian Hagen, City Administrator

Collaborative Planning, LLC

Memorandum

Date:	June 14, 2018
To:	Honorable Mayor and Council
From:	Cindy Nash, City Planner
RE:	Crow River Heights – Early Grading Agreement

The developer has requested permission to commence early grading on a portion of the Crow River Heights West Future Additions site. Specifically, they are requesting to construct grading activities in the southeast portion of the development in the area associated with the streets and lots for the completion of Jordan Avenue.

Backes Companies has submitted a final plat application for Crow River Heights West Fourth Addition, which is a portion of the area that they are requesting to be able to grade. This application will be on the June Planning Commission agenda.

This portion of the development will not have impacts to wetlands that are still subject to further permitting requirements. The City Engineer has reviewed the plans and the grading agreement. Grading on a site early is at some risk to the developer as there may be changes required to the grading plan as it completes the final plat approval process.

A grading agreement is attached for the Council's consideration.

Attachments:

1) Grading Agreement
2) Resolution

EARLY GRADING AGREEMENT

This Agreement is made and entered into effective the_____day of_____, 2018 by and between Backes Development, LLC ("Developer") and the City of Hanover ("City")

WHEREAS, Developer is in the process of obtaining City approvals for development of Crow River Heights West Future Additions, as more fully depicted and described on the attached Exhibit A ("Development").

WHEREAS, Developer wishes to grade the Development prior to final land use approvals for the Development.

WHEREAS, the City is willing to permit the early grading activity on the terms contained herein.

NOW, THEREFORE, for and in consideration of the mutual promises contained herein, and for other good and valuable consideration the parties agree as follows:

1. Early Grading Allowed. Developer shall be allowed to grade the Development consistent with the grading plan, sheet C3-1, prepared by Loucks and dated May, 24, 2018, attached hereto as Exhibit B. Grading shall be in compliance with the requirements of the September 6, 2017 Development Agreement between the parties, including but not limited to the requirements of Section 11 thereof.

2. Financial Security. Developer shall post with the City financial security, acceptable to the City, in the amount of $158,000. Security shall be posted prior to commencement of any grading activity. Security shall comply with the procedural requirements of Section 17 of the parties' September 6, 2017 Development Agreement relating to Crow River Heights West Third Addition.

3. Acknowledgment of Developer. Developer acknowledges that this Agreement only allows Developer to engage in early grading work. No other work is authorized by this Agreement. Developer proceeds with the early site grading at its own risk, and any changes required to the grading work based on finally-approved plans and the project as approved will be at Developer's expense.

4. Erosion Control.

   a. All construction related to the Development shall be conducted in a manner designed to control erosion and in compliance with all City ordinances and other requirements, including the City's permit with the Minnesota Pollution Control Agency regarding municipal separate storm sewer system program dated August 1, 2013. Before any portion of the Development is graded, an erosion control plan shall be implemented by the Developer as approved by the City. The City may impose additional reasonable erosion control requirements after the City's initial approval if the City deems such necessary due to a change in conditions. All areas disturbed by grading shall be reseeded promptly after the completion of the work in that area unless construction of streets or utilities, buildings or other improvements is anticipated immediately thereafter. Except as otherwise provided in the erosion control plan, seed shall provide a temporary ground cover as rapidly as possible. All seeded areas shall be mulched, and disc anchored as necessary for seed retention. The parties recognize that time is of the essence in controlling erosion.

   b. If the Developer does not comply with the erosion control plan and schedule or supplementary instructions received from the City, the City may take such action as it deems reasonably necessary to control erosion based on the urgency of the situation. The City agrees to provide reasonable notice to the Developer in advance of any proposed

action, including notice by telephone or email in the case of emergencies, but limited notice by the City when conditions so dictate will not affect the Developer's obligations or the City's rights hereunder.

c. The Developer agrees to reimburse the City for all expenses it incurs in connection with any action it takes to control erosion. No grading of the Development will be allowed within the Subdivision unless the Developer is in full compliance with the erosion control requirements. The erosion control measures specified in the erosion control plan or otherwise required within the Development or adjacent areas shall be binding on the Developer and its successors and assigns.

5. Site Grading; Haul Routes.

a. All site and other grading must be done in compliance with the Plans, required erosion control measures and all requirements of the Minnesota Pollution Control Agency regarding contaminated soils. The City may withhold issuance of a building permit for any structure within the Subdivision until the approved certified grading plan is on file with the City and all erosion control measures are in place as determined by the City. Within 30 days after completion of the grading, or such other period acceptable to the City's engineer, the Developer shall provide the City with an "as constructed" grading plan and a certification by a registered land surveyor or engineer.

b. The Developer agrees that any fill material which must be brought to or removed from the Development or adjacent areas while grading of the Development will be transported using the haul route established by the City. The City designates Jordan Avenue NE from Kadler Avenue NE from Co. Rd 34 as the haul route. Kayla Lane, Kadler

Circle, or Kadler Avenue NE south of the Development from Co. Rd 20 shall not be used as a haul route.

BACKES DEVELOPMENT, LLC	CITY OF HANOVER
By_____	By_____
Its_____	Its_____

Exhibit A

Those parts of the Northeast Quarter of the Northeast Quarter, the Northwest Quarter of the Northeast Quarter, and the Southeast Quarter of the Northeast Quarter of Section 34, Township 120 North, Range 24 West, Wright County, Minnesota, lying westerly, northerly, southwesterly, westerly, southwesterly and westerly of the following described line:

Commencing at the Northeast corner of said Northeast Quarter; thence westerly, on an assumed bearing of South 88 degrees 52 minutes 51 seconds West, along the north line of said Northeast Quarter, a distance of 1151.45 feet to the point of beginning of the line to be described; thence South 19 degrees 21 minutes 05 seconds East a distance of 346.94 feet; thence South 76 degree 05 minutes 34 seconds West a distance of 201.00 feet; thence southerly 25.96 feet along a non-tangential curve concave to the west, said curve has a radius of 217.00 feet, a central angle of 6 degrees 51 minutes 15 seconds, and a chord that bears South 13 degrees 00 minutes 43 seconds East; thence South 77 degrees 38 minutes 43 seconds West, not tangent to said curve a distance of 140.00 feet; thence North 13 degrees 42 minutes 04 seconds West a distance of 48.00 feet; thence North 36 degrees 05 minutes 51 seconds West a distance of 48.00 feet; thence South 89 degrees 10 minutes 28 seconds West a distance of 170.00 feet; thence South 33 degrees 52 minutes 00 seconds East a distance of 75.00 feet; thence South 50 degrees 45 minutes 56 seconds East a distance of 120.00 feet; thence South 42 degrees 40 minutes 13 seconds East a distance of 273.00 feet; thence South 22 degrees 37 minutes 55 seconds East a distance of 141.00 feet; thence South 3 degrees 41 minutes 31 seconds West a distance of 108.00 feet; thence South 20 degrees 00 minutes 33 seconds East a distance of 57.00 feet; thence North 66 degrees 36 minutes 33 seconds East a distance of 159.00 feet; thence North 88 degrees 41 minutes 47 seconds East a distance of 122.00 feet; thence South 2 degrees 15 minutes 44 seconds East a distance of 135.00 feet; thence westerly 24.34 feet along a non-tangential curve concave to the south, said curve has a radius of 283.00 feet, a central angle of 4 degrees 55 minutes 42 seconds, and a chord that bears South 83 degrees 14 minutes 55 seconds West; thence South 9 degrees 12 minutes 56 seconds East, not tangent to said curve a distance of 256.00 feet; thence South 5 degrees 22 minutes 02 seconds West a distance of 45.00 feet; thence South 62 degrees 36 minutes 22 seconds East a distance of 75.00 feet; thence South 58 degrees 38 minutes 19 seconds East a distance of 97.00 feet; thence South 45 degrees 51 minutes 28 seconds East a distance of 96.00 feet; thence South 33 degrees 17 minutes 50 seconds East a distance of 113.00 feet to the west line of Block 3, CROW RIVER HEIGHTS WEST FIRST ADDITION, Wright County, Minnesota; thence on a bearing of SOUTH, a distance of 39.13 feet to a corner of Lot 6, said Block 3; thence southeasterly, northeasterly, easterly, southerly and southeasterly, along the southwesterly boundary of said CROW RIVER HEIGHTS WEST FIRST ADDITION, a distance of 945.55 feet to the most southerly corner of Lot 1, Block 5, said CROW RIVER HEIGHTS WEST FIRST ADDITION, which corner is also on the west line of Block 4, CROW RIVER HEIGHTS EAST THIRD ADDITION, said Wright County; thence southwesterly and southerly, along the westerly line of said CROW RIVER HEIGHTS EAST THIRD ADDITION, and said line extended, a distance of 428.09 feet, to the south line of said Southeast Quarter of the Northeast Quarter and there terminating.

Exhibit B

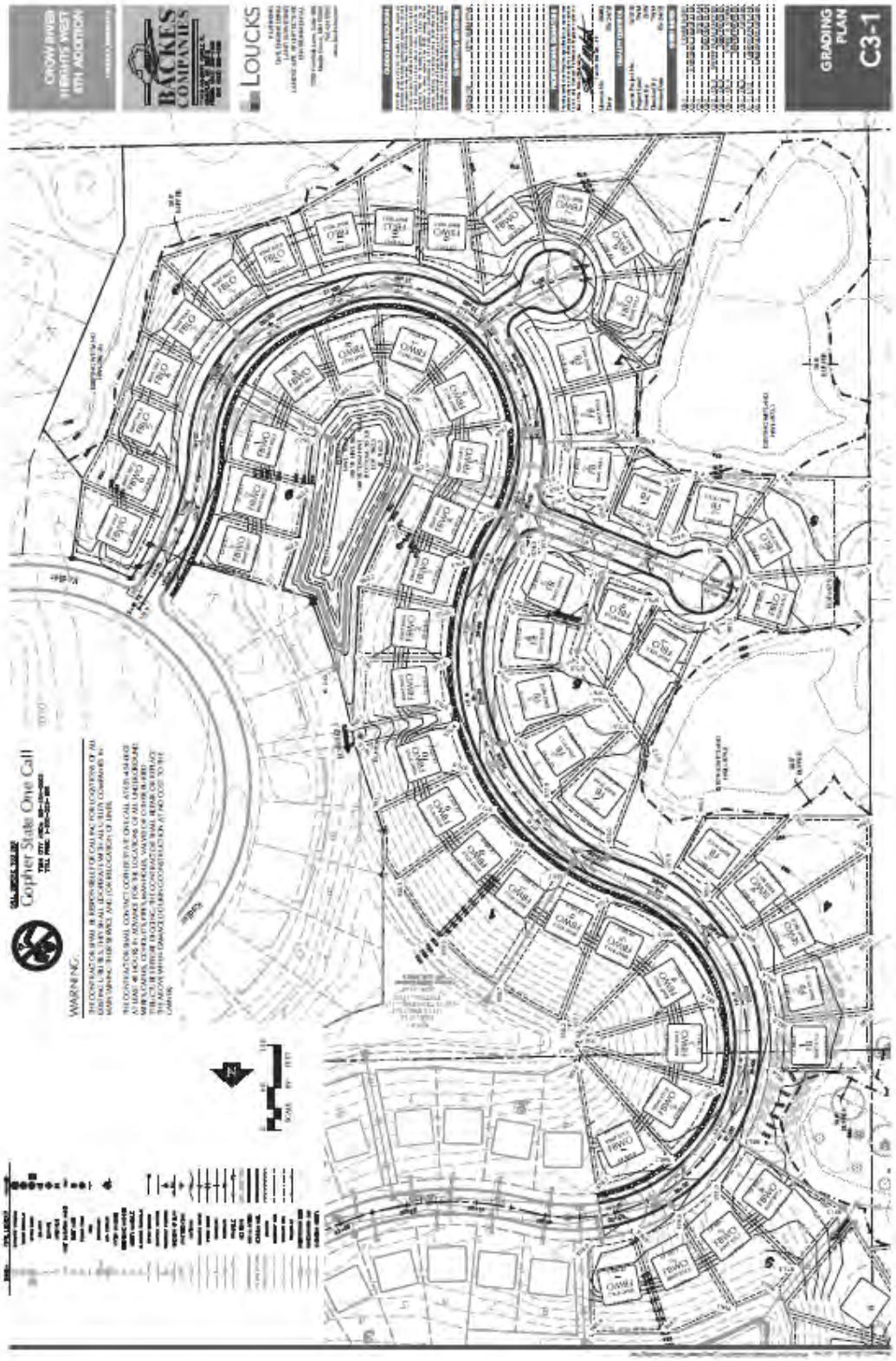
CROW RIVER HEIGHTS WEST 6TH ADDITION
BECKES COMPANIES
LOUCKS
GRADING PLAN
C3-1
Gopher State One Call
WARNING:

CITY OF HANOVER
COUNTIES OF WRIGHT AND HENNEPIN
STATE OF MINNESOTA

A regular meeting of the City Council of the City of Hanover, Minnesota, was called to order by Mayor Chris Kauffman at 6:00 p.m. in the Council Chambers of the City Hall, in the City of Hanover, Minnesota, on the 19th day of June, 2018.

The following Council Members were present:

The following Council Members were absent:
A motion to adopt the following resolution was made by _____ and seconded by _____.

RESOLUTION NO 06-19-18-69

A RESOLUTION APPROVING A GRADING AGREEMENT FOR A PROJECT KNOWN AS CROW RIVER HEIGHTS FUTURE ADDITIONS

WHEREAS, Backes Development, LLC ("Developer") is the fee owner of the real property described in the attached Exhibit A, which real property has received preliminary plat approval by Resolution Number _____ on June 19, 2018 and is proposed to be subdivided and platted for development, and shall hereinafter be referred to in its entirety as the "Subject Property"; and

WHEREAS, Developer has submitted an application for final plat for a development to be known as Crow River Heights West Fourth Addition; and

WHEREAS, Developer has requested permission to commence grading activities prior to receiving final plat approval and entering into a Development Agreement with the City; and

WHEREAS, Developer has proposed to be permitted to commence grading activities which are limited to a portion of the Subject Property and consistent with the grading plan, sheet C3-1, prepared by Loucks and dated May 24, 2018, attached hereto as Exhibit B.

NOW, THEREFORE, BE IT RESOLVED that the City Council hereby approves the Grading Agreement and authorizes City staff and the Mayor to execute documents as necessary.

Council members voting in favor:

Opposed or abstained:

Adopted by the City Council this 19th day of June, 2018.

APPROVED BY:

_____

Chris Kauffman, Mayor

ATTEST:

_____

Brian Hagen, City Administrator

Exhibit A

Those parts of the Northeast Quarter of the Northeast Quarter, the Northwest Quarter of the Northeast Quarter, and the Southeast Quarter of the Northeast Quarter of Section 34, Township 120 North, Range 24 West, Wright County, Minnesota, lying westerly, northerly, southwesterly, westerly, southwesterly and westerly of the following described line:

Commencing at the Northeast corner of said Northeast Quarter; thence westerly, on an assumed bearing of South 88 degrees 52 minutes 51 seconds West, along the north line of said Northeast Quarter, a distance of 1151.45 feet to the point of beginning of the line to be described; thence South 19 degrees 21 minutes 05 seconds East a distance of 346.94 feet; thence South 76 degree 05 minutes 34 seconds West a distance of 201.00 feet; thence southerly 25.96 feet along a non-tangential curve concave to the west, said curve has a radius of 217.00 feet, a central angle of 6 degrees 51 minutes 15 seconds, and a chord that bears South 13 degrees 00 minutes 43 seconds East; thence South 77 degrees 38 minutes 43 seconds West, not tangent to said curve a distance of 140.00 feet; thence North 13 degrees 42 minutes 04 seconds West a distance of 48.00 feet; thence North 36 degrees 05 minutes 51 seconds West a distance of 48.00 feet; thence South 89 degrees 10 minutes 28 seconds West a distance of 170.00 feet; thence South 33 degrees 52 minutes 00 seconds East a distance of 75.00 feet; thence South 50 degrees 45 minutes 56 seconds East a distance of 120.00 feet; thence South 42 degrees 40 minutes 13 seconds East a distance of 273.00 feet; thence South 22 degrees 37 minutes 55 seconds East a distance of 141.00 feet; thence South 3 degrees 41 minutes 31 seconds West a distance of 108.00 feet; thence South 20 degrees 00 minutes 33 seconds East a distance of 57.00 feet; thence North 66 degrees 36 minutes 33 seconds East a distance of 159.00 feet; thence North 88 degrees 41 minutes 47 seconds East a distance of 122.00 feet; thence South 2 degrees 15 minutes 44 seconds East a distance of 135.00 feet; thence westerly 24.34 feet along a non-tangential curve concave to the south, said curve has a radius of 283.00 feet, a central angle of 4 degrees 55 minutes 42 seconds, and a chord that bears South 83 degrees 14 minutes 55 seconds West; thence South 9 degrees 12 minutes 56 seconds East, not tangent to said curve a distance of 256.00 feet; thence South 5 degrees 22 minutes 02 seconds West a distance of 45.00 feet; thence South 62 degrees 36 minutes 22 seconds East a distance of 75.00 feet; thence South 58 degrees 38 minutes 19 seconds East a distance of 97.00 feet; thence South 45 degrees 51 minutes 28 seconds East a distance of 96.00 feet; thence South 33 degrees 17 minutes 50 seconds East a distance of 113.00 feet to the west line of Block 3, CROW RIVER HEIGHTS WEST FIRST ADDITION, Wright County, Minnesota; thence on a bearing of SOUTH, a distance of 39.13 feet to a corner of Lot 6, said Block 3; thence southeasterly, northeasterly, easterly, southerly and southeasterly, along the southwesterly boundary of said CROW RIVER HEIGHTS WEST FIRST ADDITION, a distance of 945.55 feet to the most southerly corner of Lot 1, Block 5, said CROW RIVER HEIGHTS WEST FIRST ADDITION, which corner is also on the west line of Block 4, CROW RIVER HEIGHTS EAST THIRD ADDITION, said Wright County; thence southwesterly and southerly, along the westerly line of said CROW RIVER HEIGHTS EAST THIRD ADDITION, and said line extended, a distance of 428.09 feet, to the south line of said Southeast Quarter of the Northeast Quarter and there terminating.

Exhibit B

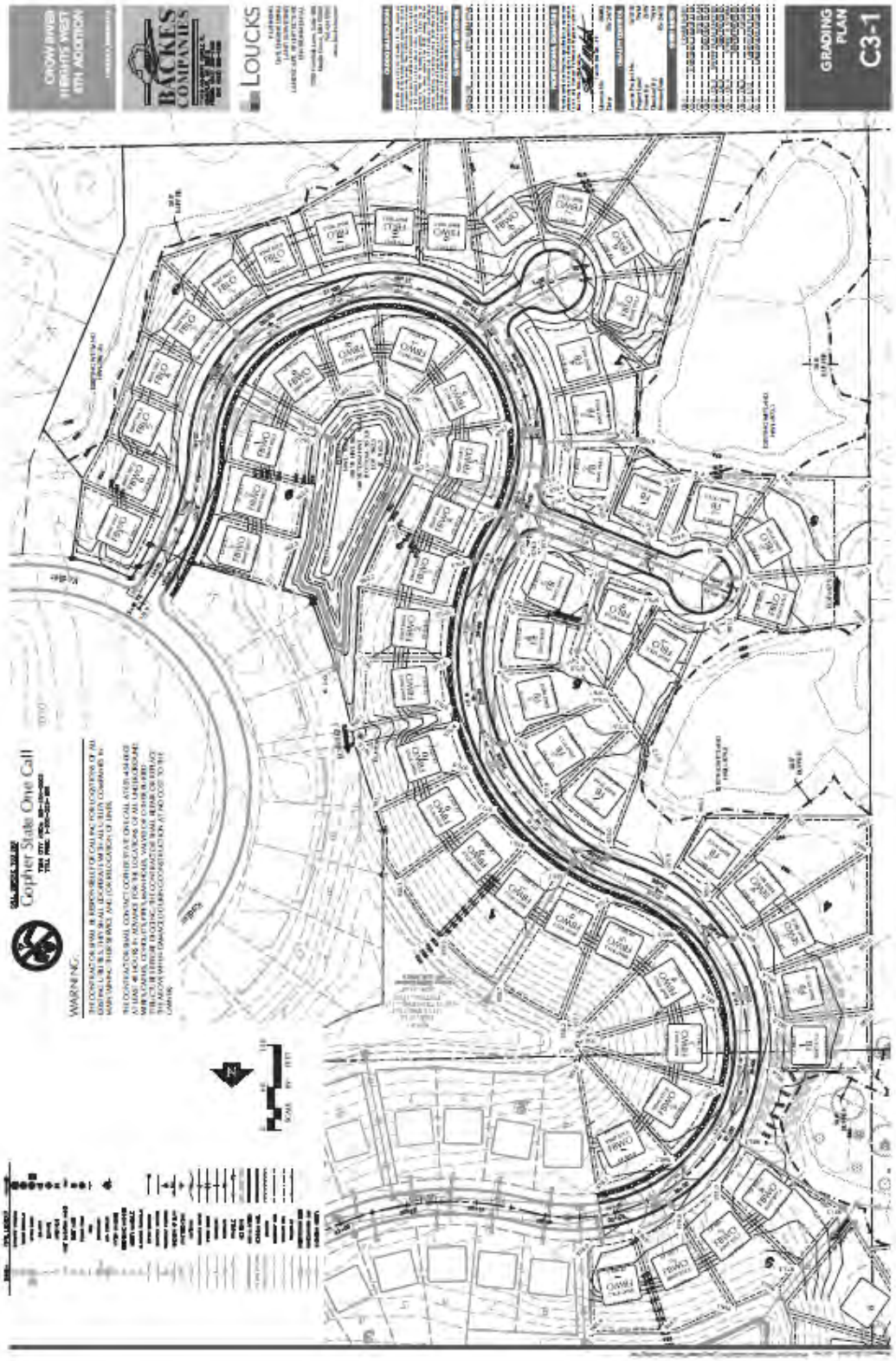
CROW RIVER HEIGHTS WEST 6TH ADDITION
BACKES COMPANIES
LOUCKS
GRADING PLAN
C3-1
Gopher State One Call
WARNING:

CITY OF HANOVER 7684397

Date: December 19, 2000 No. 11-00-12

MOTION BY COUNCILOR: **Lane**
SECONDED BY COUNCILOR: **Urbanski**

Bot 491

APPROVING FINAL DEVELOPMENT PLAN AND FINAL PLAT FOR BRIDGES AT HANOVER

WHEREAS, that the Hanover Planning Commission held a public hearing for the consideration of the preliminary plat, preliminary development plan, final development plan for the single-family housing portion and the rezoning from RA to R1A (PD) on September 11, 2000; and

WHEREAS, upon recommendations made by the Planning Commission the City Council did act on and approve the preliminary plat, preliminary development plan, final development plan for the single-family housing portion and the rezoning from RA to R1A (PD) on October 17, 2000; and

WHEREAS, the applicant made an application for the approval of the final development plan for the portion consisting of the townhomes and senior housing, for which a public hearing was held in front of the Hanover Planning Commission as required, on the 11th day of December, 2000; and

WHEREAS, in conjunction with the final development plan, the applicant requested consideration by the Planning Commission for approval of the final plat for the entire project referred to as Bridges at Hanover;

WHEREAS, upon consideration on the application by the Geis Group, Steve Geis, the Planning Commission has recommended conditional approval of the Final Development Plan and the Final Plat for Bridges at Hanover;

NOW THEREFORE, the City Council of the City of Hanover hereby finds:

1. The following items, previously addressed with respect to preliminary development plan and preliminary plat approval, have been satisfactorily addressed:

   A. Tree replacement;
   B. Landscape Plan;
   C. Architectural Design;

2. The planned development is not in conflict with the comprehensive land use plan.

3. The planned development is not in conflict with the intent of the primary zoning district.

4. The planned development is not in conflict with other applicable provisions of the City code.

5. The final development plan is not in conflict with zoning or other ordinances of the City of Hanover.

6. Single family residential homes are predominant land use and in that density, is no higher than a standard R1A subdivision.

7. The area is being planned as a coordinated unit and the planned development results in a well planned system of streets and trails.

8. The planned development will not create an excessive burden on parks, schools, streets and other public facilities and utilities, which are proposed to serve the planned development.

9. The planned development will not have an undue and adverse impact on the reasonable enjoyment of the neighborhood property.

10. The quality of the building and site design proposed by the planned development will substantially enhance the aesthetics of the site and will create a public benefit that is greater than strict application of the zoning regulations.

NOW THEREFORE, BE IT RESOLVED, that the final development plan and final plat are hereby approved; and

FURTHER BE IT RESOLVED, that the development agreement for Bridges at Hanover shall, among other things, address the following subjects:

1. A maintenance agreement, as approved by the city attorney, shall be entered into with the homeowners' association to maintain all outlots within the development.

2. A detailed design of the daycare center shall be approved by the City Planner and be in conformance with the approved development plans. The daycare is to be located within the senior housing building (except for any exterior play area).

3. Final grading, storm water and utility plans as approved by the City Engineer.

4. Access to sanitary sewer and municipal water services be provided.

5. Appropriate financial guarantees be provided by the developer.

6. Park dedication to be paid in cash for 192 new lots/units.

7. Landscaping and lighting is to comply with city code and policies.

8. The paving of a portion of 109th Avenue, the northerly street connection to County Road 123.

9. The construction of the auxiliary lanes along County Road 123, as recommended by Hennepin County.

10. Grading shall be designed so as to protect the existing trees located along the south property line where feasible. Trees shall be protected by the placement of protective fencing during site grading.

CITY OF HANOVER

NOW THEREFORE BE IT RESOLVED that the final development plan and final plat for Bridges at Hanover, in the City of Hanover, County of Hennepin, State of Minnesota, is approved.

YES		NO	
DiOrio		DiOrio	X
Irvine	X	Irvine	
Lane	X	Irvine	
Urbanski	X	Urbanski	
Zimmerman	X	Zimmerman	

****

STATE OF MINNESOTA COUNTIES OF WRIGHT AND HENNEPIN

I, Susan Vergin, duly appointed, qualified, and acting clerk for the City of Hanover, Counties of Wright and Hennepin, State of Minnesota, do hereby certify that I have compared the foregoing copy of a resolution or motion with the original minutes of the proceedings of the Hanover City Council, at their session held on the 19th day of December, 2000 now on file in my office, and have found the same to be true and correct copy thereof.

Witness my hand and official seal at Hanover, Minnesota, the 20 day of December 2000.

Susan Vergin

Susan Vergin, City Clerk of Hanover

TRANSFER ENTERED
HENNEPIN COUNTY TAXPAYER SERVICES

MAR 13 2002

HENNEPIN COUNTY MINN.
BY DEPUTY

F:\My Documents\resolutions\2000\11-00-12 bridges dev. plan.doc

11D/4

7684397

OFFICE OF COUNTY RECORDER
HENNEPIN COUNTY, MINNESOTA

CERTIFIED FILED AND OR
RECORDED ON

2002 MAR 26 PM 3:24

7684397

CO. REC.

DEPUTY

CITY OF HANOVER

DEVELOPMENT AGREEMENT

THIS DEVELOPMENT AGREEMENT (the Agreement), made and entered into this 5th day of November, 2001, by and between the CITY OF HANOVER, a municipal corporation organized under the laws of the State of Minnesota (the City), and THE GEIS GROUP, LTD., a Minnesota corporation (the Developer); WITNESSETH:

WHEREAS, the Developer has made application to the City for approval of a final plat of land within the City described on Exhibit A attached hereto (the Subdivision); and

WHEREAS, the City Council adopted Resolution No. 11-00-12 on December 19, 2000 (attached as Exhibit B hereto), granting final plat approval to the Subdivision, on the condition that Developer enter into an agreement with the City governing the provision of certain utilities, services and facilities to the Subdivision, and the transfer of certain land interests and security payments to the City, so as to fully comply with the Subdivision Ordinance;

NOW, THEREFORE, in consideration of the premises and the mutual promises and conditions hereinafter contained, it is hereby agreed as follows:

1.) Warranty of Developer - Developer hereby warrants and represents to the inducement to the City's entering into this Agreement, that Developer is the fee owner of the Subdivision.

2.) Right to Proceed – Within the plat or land to be platted, the Developer may not construct sewer lines, water lines, streets, utilities, public or private improvements, or any buildings until all the following conditions have been satisfied: (a) this Agreement has been fully executed by both parties and filed with the City Administrator; (b) the necessary security has been received by the City; (c) the plat has been recorded with the Hennepin County Recorder's Office; (d) the City Administrator has issued a letter that all conditions required to commence the improvements have been satisfied and that the Developer may proceed; and (e) the contract for the construction of the river crossing of sanitary sewer and water lines has been awarded.

3.) Improvements – In accordance with the feasibility study prepared by the City or Developer's Engineer, the application materials submitted by Developer, the preliminary and final plats of the Subdivision, the City Council Resolution attached as Exhibit B hereto, and the applicable standards and ordinances of the City, the following described improvements (collectively, the Developer

Installed Improvements) shall or have been constructed and installed on the terms and conditions hereinafter contained:

(a) Site grading to elevations shown in approved grading and drainage plan (Site Grading);

(b) Streets, as required by City, including grading graveling and stabilizing, constructing and sodding of berms, swales and boulevards, landscaping and boulevard trees, permanent street surfacing with bituminous material, installing concrete curbs, gutters and driveway approaches, and installing street lights and street signs as required by the City Engineer and the Public Works Department (Street Improvements);

(c) Sidewalks and trails, as required by the City (Sidewalk Improvements);

(d) Storm sewers, as required by the City, including all necessary catch basins, ditches, inlets, retention areas and other appurtenances (Storm Sewer Improvements);

(e) Sanitary sewer laterals extensions, as required by the City, including all necessary building services and other appurtenances (Sanitary Sewer Improvements);

(f) Water main laterals or extensions, as required by the City, including all necessary building services, hydrants, valves and other appurtenances (Water Main Improvements);

(g) Landscaping of all common areas and lots containing other than single family residences in accordance with a City approved landscaping plan.

4.) Installation of Improvements – All Developer Installed Improvements will be installed and completed at Developer's expense and according to the following terms and conditions:

(a) Approval of Contractor – Any contractor(s) selected by the Developer to construct and install any Developer Installed Improvement must be determined by the City to be acceptable and approved in writing.

(b) Construction Plans – The construction, installation, materials and equipment shall be in accordance with plans and specifications prepared by WSB Engineering dated September 26, 2001, approved by

the City Engineer on September 26, 2001. Such plans and specifications shall be based upon such engineering surveys, including soil borings and material tests, determined to be necessary by the City Engineer.

(c) Supervision and City Services – Construction and installation plans and activity shall be reviewed by and subject to the supervision of the City. Developer will cause the contractor(s) to furnish the City with a schedule of proposed operations at least five (5) days prior to the commencement of construction of each type of improvement. City shall inspect all Developer Installed Improvements during and after construction for compliance with approved specifications. Developer will notify the City Engineer at such times during construction as the City Engineer requires for inspection purposes.

(d) City Fees – Developer shall reimburse the City for all the City's costs and expenses incurred in the processing of the Subdivision and for review and supervision of plans and constructions which compensation shall be due and payable to the City within twenty (20) days following the receipt of a statement therefore.

(e) Easements – The Developer shall convey to the City, prior to the commencement of construction of Developer Installed Improvements and at no cost to the City, all permanent and temporary easements for the installation and maintenance of Developer Installed Improvements determined to be necessary by the City. All such easements shall be in recordable form acceptable to the City and contain such terms and conditions as the City may prescribe.

(f) Insurance – Developer shall cause each contractor engaged in the construction and installation of any Improvement to furnish the City with evidence acceptable to the City showing such insurance coverage (including workers' compensation, liability and property damage) in such amounts as are required for City construction contracts.

(g) Faithful Performance of Construction Contracts – Developer will fully and faithfully perform the installation and construction of Developer Installed Improvements in accordance with the approved plans and specifications therefore and shall comply with all terms of any and all contracts entered into by the Developer for the installation and construction of all such Improvements, at no expense to the City. Developer hereby guarantees the workmanship and materials respecting such Improvements for a period of two (2) years following

the City's final acceptance of the Improvements and agrees to repair or replace, as directed by the City, and at Developer's sole cost and expense, any work or materials that become defective, in the sole opinion of the City, within said two (2) year period even though notice be given by the City after said two (2) year period.

(h) As-builts – Within forty-five (45) days of City acceptance of Developer Installed Improvements and prior to the release by the City of the Security, the City Engineer shall prepare a complete set of as-built plans at the expense of the Developer to be reimbursed to the City as provided herein. Failure to comply with this provision will result in the City suspending issuance of Certificates of Occupancy.

5.) Trunk Water, Sanitary Sewer and Storm Sewer Assessments –

(a) Payment of Water and Sewer Assessments – Developer acknowledges that the Subdivision has been benefited by the City for trunk water and sewer facilities and agrees for itself, its heirs, successors and assigns, to pay at the time of building permit issuance a trunk fee in the amount of $1,300 per lot for sanitary sewer and $775 per lot for trunk water, or the trunk fees applicable at the time of building permit issuance. Developer will notify all lending institutions or persons involved in the sale of lots within the Subdivision of this requirement and shall direct said lending institutions or others to make the required payments out of the proceeds of lot sales. Failure to make payments as required by this Section shall be a breach of this Agreement and City shall have the right to draw on the security provided by Developer hereof in the event of such a breach.

(b) Storm Sewer Trunk Fee – Developer agrees to pay to the City prior to execution of the Final Plat a trunk storm sewer fee at the rate of $0.05 per square foot of the gross area of the Subdivision. The trunk fee is estimated to be $ 109,181.90 based upon an area of 2,183,638 square feet.

6.) Default: Acceleration on Default – In the event Developer, or its heirs, successors or assigns, violates any of the covenants and agreements herein contained, the City, at its option, in addition to its other rights and remedies, by written notice of default given to Developer, may declare all amounts to be paid by Developer pursuant to this Agreement, due and payable in full, with interest, immediately, or on such date as the City shall specify in its notice of default to Developer. If Developer fails to make payment in the amount and at the time specified in the City's notice of default to Developer, City may, at its

option draw on the security provided by Developer pursuant to this Agreement and/or commence legal action against Developer to collect the entire amount owed by Developer, including reasonable attorneys' fees.

7.) Grading Plan – The plat shall be graded in accordance with the approved grading development and erosion control plan. The plan shall conform to City of Hanover specifications. Erosion control plans for individual lots may be required by the City or City Engineer.

(a) Erosion Control – Developer shall comply with Best Management Practices, as directed by the City Engineer, to control erosion on the Subdivision. Erosion control measures shall include:

- The placement of silt fencing or suitable alternative as approved by the City Engineer around all areas within the Subdivision where natural ground cover has been removed and not replaced. This requirement includes individual home building sites to control erosion into streets and storm sewers.

- The cleaning of all paved streets within one-half (½) mile of the Subdivision if directed by the City Engineer.

- The cleaning of all on-site and all down-gradient off-site City storm sewers if determined necessary by the City Engineer because of erosion from building sites within the Subdivision.

(b) As Built Plans – Prior to City acceptance of the grading and before the City releases the security, the Developer shall provide the City with an "as constructed" grading plan and a certification by a registered land surveyor or engineer that all ponds, swales, and ditches have been constructed on public easements or land owned by the City. The Developer shall provide field varied elevations of the following: (a) cross sections of ponds; (b) location and elevations along all swales and ditches, and (c) lot corners and house pads. The City will not issue any building permit until the approved certified grading plan is on file with the City, except for model homes as provided herein.

8.) Park Dedication –

(a) Park Dedication Fees – In satisfaction of the park dedication requirements of the Subdivision Ordinance, Developer agrees to payment of a $1,000.00 park improvement fee per residential unit, or

such other amount as required pursuant to City Code at the time of building permit issuance.

9.) Security for Developer's Performance –

(a) No work shall be commenced under this agreement, and the Final Plat of the Subdivision will not be executed by the City or released for recording, until the Developer has filed with the City Administrator a performance bond, cash deposit, an irrevocable and unconditional letter of credit or sight draft substantially in the form acceptable to the City, or some equivalent security acceptable to City in its sole discretion, in the amount of One Million Five Hundred Thirty-One Thousand and no/100 ($1,531,000.00) reflecting One Hundred Twenty-five Percent (125%) of the City Engineer's estimate. Said security shall provide that funds shall be paid to the City upon written demand of the City to the extent of default herein by Developer in the payment of any amount due or the performance of any other duty or obligation of Developer pursuant to this Agreement, including the Developer's obligations to complete the Developer Installed Improvements and to make payment of special assessments levied pursuant hereto, whether accelerated or otherwise,

(b) The security provided in accordance with the above shall be released when Developer's obligations under this Agreement have been completed. The security may be reduced upon approval of the City Administrator and City Engineer.

10.) Phased Development – Developer specifically agrees to each of the conditions in City Council Resolution No. 10-11-12 (attached as Exhibit B to this Agreement), which conditions are hereby specifically incorporated into this Agreement and made a part hereof. Developer also agrees to the following conditions:

(a) Future Phases – The Subdivision is one phase of a multi phase development proposed by Developer. Subdivision approval of future phases will be subject to such conditions as shall be imposed by the City Council at the time of final plat approval. The City may refuse to approve final plats of subsequent phases if the Developer has breached this Agreement and the breach has not been remedied.

(b) Additional Regulatory Approvals –All additional regulatory approvals required for construction of the Improvements or development of the Subdivision shall be obtained before commencement of construction

on the Improvements. Additional approvals may include Department of Health Permits for the extension of water; Minnesota Pollution Control Agency permit for the extension of sewer; National Pollutant Discharge Elimination System permits for grading; Department of Natural Resources permits for dewatering; and/or Army Corps of Engineers permits for construction of sedimentation ponds.

(c) Changes in Official Controls – For two (2) years from the date of this Agreement, no amendments to the City's Comprehensive Plan, except an amendment placing the plat in the current metropolitan urban service area, or official controls shall apply to or affect the use, development density, lot size, lot layout or dedications of the approved plat unless required by state or federal law or agreed to in writing by the City and the Developer. Thereafter, notwithstanding anything in this Agreement to the contrary, to the full extent permitted by state law the City may require compliance with any amendments to the City's Comprehensive Plan, official controls, platting or dedication requirements enacted after the date of this Agreement.

11.) Building and Occupancy Permits –

(a) Reimbursement of Costs – Developer shall reimburse the City for the City's costs of reviewing the preliminary and final plat for the Subdivision. This amount shall be paid prior to execution and release of the final plat for recording. Park charges and storm sewer charges, if any, are not being imposed on outlots in the plat that are designated in an approved preliminary plat for future subdivision into lots and blocks.

(b) Building permits – City will not issue any building permit for any lot or parcel in the Subdivision until sewer and water Improvements are available, tested and approved to the lot and all roads necessary to access the lot are complete to the point of having the first layer of a asphalt paving in place, and a certified as-built grading plan has been submitted to the City in a form acceptable to the City Engineer, except that:

(1) issuance of a building permit may be authorized by the Zoning Administrator for up to five model homes prior to the availability of utilities and graveling of roads subject to approval of the City Engineer. Any model home constructed pursuant to early issuance of a building permit may not be open to the public as a model until the home is connected to sewer

and water and all roads necessary to access the home have been graded, gravel subbase, base and the first layer of asphalt surfacing have been installed and approved by the City Engineer.

In the event that the Developer, due to weather or other unforeseen conditions, is unable to place the first layer of asphalt surfacing prior to the Spring 2002 Parade of Homes, any models constructed may be open to the public for showing until March 1, 2002 as long as the roadways accessing the model homes have Class 5 placed on said roadway as approved by the City Engineer.

(c) Occupancy Permits – City will not issue a certificate of occupancy for any building constructed on any lot or parcel in the Subdivision until all Improvements are completed, approved by the City Engineer and accepted by the City, a complete set of record drawings in a form acceptable to the City Engineer have been submitted by the Developer, and all punch list items have been completed except that:

(1) a certificate of occupancy will be issued where all improvements have been completed except the final layer of asphalt paving.

(d) Notice to Third Parties – If the Developer fails to comply with any of the provisions of this Agreement, the City may refuse to issue a building permit or certificate of occupancy for any lot or parcel in the Subdivision. Developer agrees to advise Purchasers of any lot or parcel within the Subdivision of the existence of this contract and the obligations and restrictions created herein prior to the completion of the sale. Further, Developer agrees to save and hold City harmless from any and all claims or actions arising from the right to withhold the issuance of such Permits and certificates and from other provisions hereof.

12.) Additional Specific Provisions –

(a) Crow River Utility Crossing – Developer shall advance to and deposit with the City the sum of $ 596,429.00, as set forth on the attached Summary, Exhibit C, concurrently with the execution of this Agreement, which monies the City is authorized to use to pay the costs of construction, including engineering, administrative and legal, of the

Crow River utilities crossing project (WSB Project No. 1260.00) (the "Project").

The City agrees to reimburse the Developer the sum of up to $95,400.00 from assessments and trunk fees collected by the City, if any, from the parcels that are benefited by the Project on a "pay-as-you-connect" basis. The known affected parcels are described on attached Exhibit D, Cost Sharing Proposal incorporated herein.

If parcels other than the said affected parcels are connected to the Project, the City shall collect comparable "charges" and reimburse the Developer accordingly. In the event the construction costs are greater or lesser than $ 596,429.00, the engineer for the City will adjust the Developer's share and City share according to benefit conferred proportionately. If greater, the Developer shall deposit the difference prior to award of the Project.

In all events, the City shall have no further obligation to collect and reimburse under this subparagraph 12(a) after 15 years from the date hereof.

(b) Project Phasing – Senior Housing – The Developer has proposed to construct a ~~72~~ 75-unit senior housing facility (the Seniors Project) as part of the Subdivision. The City and Developer acknowledge the benefits to the community relating to the development of the senior housing facility as in integral part of the Development. The City desires the development of the Seniors Project as early as possible. The Developer has stated its need and desire to develop a substantial portion of the single family lots prior to the financial feasibility of constructing the Senior Project. To those ends, the Developer and City agree as follows: The Developer agrees to secure a building permit to construct the Seniors Project, including payment of all fees relating thereto, within thirty six (36) months from the date of City approval and acceptance of the public improvements set forth in this Agreement.

In the event that 60 building permits within the Plat are issued prior to the time period set forth above, within 60 days from the issuance of said 60th building permit, Developer shall submit to the City for review and processing complete plans for the proposed Seniors Project.

If the Developer has failed to comply with any of these requirements, the Developer shall be deemed in default of the Agreement. In the

event of default, the Developer agrees the City shall suspend issuance of all further building permits within the Subdivision.

Additionally, until the building permit to construction the Seniors Project has been issued, no reimbursement payments provided under Section 12(a) shall be made to the Developer. In order to cure the default herein, the Developer and City must agree to amend the terms and security for performance as the City may require.

13.) General Provisions –

(a) Reimbursement of Costs – Developer shall reimburse the City for the City's costs of renewing the preliminary and final plat for the Subdivision. This amount shall be paid prior to execution and release of the final plat for recording. Park charges and storm sewer charges, if any, are not being imposed on outlots in the plat that are designated in an approved preliminary plat for final subdivision into lots and blocks.

(b) Binding Effect – The terms and provisions hereof shall be binding upon and inure to the benefit of the heirs, representatives, successors and assigns of the parties hereto and shall be binding upon all future owners of all or any part of the Subdivision and shall be deemed covenants running with the land. References herein to Developer, if there be more than one, shall mean each and all of them. This Agreement shall be placed of record so as to give notice hereof to subsequent purchasers and encumbrances of all or any part of the Subdivision, and all recording fees, if any, shall be paid by the Developer.

(c) Severability – In the event that any portion of this Agreement shall be held invalid for any reason, the same shall not affect in any respect whatsoever the validity of the remainder of this Agreement.

(d) Waiver – Any waiver, whether express or implied, by any party of a breach of any provision of this Agreement, will not operate as or be construed to be a waiver of any subsequent breach of this Agreement.

(e) License – The Developer hereby grants the City, its agents, employees, officers and contractors a license to enter the plat to perform all work and inspections deemed appropriate by the City in conjunction with plat development.

(f) Notices – All notices and demands specified herein shall be deemed and timely given when delivered personally or deposited in the United States mail to the addresses hereinafter set forth by certified mail (return receipt requested). The addresses of the parties hereto are as follows until changed by written notice given as above:

If to the City at:	City of Hanover Attn: City Administrator 11250 5th Street NE P.O. Box 278 Hanover, MN 55341-0278
With a copy to:	Timothy J. Keane Larkin, Hoffman, Daly & Lindgren, Ltd. 1500 Wells Fargo Plaza 7900 Xerxes Avenue South Bloomington, Minnesota 55431
If to the Developer at:	THE GEIS GROUP, LTD. Attn: Steven Geis 9843 Pioneer Trail Greenfield, MN 55357

(g) Final Plat Approval – The City's final approval of the Subdivision plat is hereby made conditional upon the execution and delivery of this Agreement and the City's receipt of all petitions, security and other items specified herein. The Final Plat of the Subdivision may be filed and recorded within ninety (90) days of the City's final approval.

(h) Filing of Final Plat and Developer Agreement – Before construction commences on the Improvements, the Final Plat of the Subdivision and this Developer Agreement must be filed and recorded and all necessary easements shall have been conveyed to the City, unless the City Engineer authorizes in writing the commencement of limited construction activities.

(i) Deadline for Performance by Developer – Except as otherwise provided herein, Developer agrees to complete all Developer Installed Improvements and perform all other acts as me required by the Subdivision Ordinance, other applicable ordinances and the terms and conditions of Subdivision approval established by the City and to do so on or before October 15, 2003.

(j) Incorporation by Reference – All plans, special provisions, proposals, specifications and contracts for the Improvements to be made pursuant to this Agreement shall be and hereby are made a part of this Agreement by reference as fully as if set forth herein in full.

(k) No Replacement – This Agreement is in addition to and is not in replacement of any other agreement, application, understanding or action relating to the Subdivision executed by Developer.

IN WITNESS WHEREOF, the City and Developer have caused this Agreement to be duly executed on the day and year first above written.

CITY OF HANOVER

By: _____
Joyce Paullin
Its: Mayor

By: _____
Victoria Kreger
Its: City Administrator

DEVELOPER:
THE GEIS GROUP, LTD.

By: _____
Steven Geis
Its: _____

PROPERTY OWNER:

By: _____

_____

STATE OF MINNESOTA)
) ss.

COUNTY OF Wright)

The foregoing instrument was acknowledged before me this 5th day of November, 2001, by Joyce Paullin and Victoria Kreger, the Mayor and City Administrator, respectively, for the City of Hanover, Minnesota.

BEATRICE I. LINDBERG
NOTARY PUBLIC-MINNESOTA
My Commission Expires Jan. 31, 2005

Beatrice I. Lindberg
Notary Public

STATE OF MINNESOTA)
) ss.
COUNTY OF Anoka)

The foregoing instrument was acknowledged before me this 5th day of November, 2001, by Steven Geis, the President of THE GEIS GROUP, LTD.

VICTORIA L. KREGER
NOTARY PUBLIC - MINNESOTA
ANOKA COUNTY
MY COMM. EXP. 01/31/2005

Victoria L. Kreger
Notary Public

STATE OF MINNESOTA)
) ss.
COUNTY OF _____)

The foregoing instrument was acknowledged before me this _____ day of _____, 2001, by _____, the _____ of _____.

_____
Notary Public

THIS INSTRUMENT WAS DRAFTED BY:
Couri & MacArthur Law Office
705 Central Avenue East
P.O. Box 369
St. Michael, MN 55376-0369
Phone: (763) 497-1930

EXHIBIT C

Post Bid Project Costs for Bridges at Hanover Developer Agreement

Construction Cost	=	$407,945.95
5% Contingency	=	$ 24,397.30
Subtotal	=	$512,343.25
25% Indirect Costs	=	$128,085.81

Total	**=**	**$640,429.06**
Credit for previous payment for Plans & Specifications	=	($30,000.00)
Trunk Watermain Oversize Credit 1400 linear feet – 12" watermain from 8" watermain at $10.00/linear foot oversize	=	($14,000.00)

		$596,429.06

EXHIBIT D

CROW RIVER CROSSING
COST SHARING PROPOSAL PROPERTIES
FROM WHICH REIMBURSEMENT
TO DEVELOPER WILL BE MADE
THROUGH ASSESSMENTS AND TRUNK FEES

CITY OF HANOVER
WSB PROJ. NO. 1260.00

			UNITS		ESTIMATED ASSESSED COSTS		TOTAL PROJECT COST
	PROPERTY OWNER NAME/ADDRESS	PID NUMBER	Sanitary Sewer Unit	Water Unit	Sanitary Sewer Unit	Water Unit	
1	Hill Top Bar	01-119-24-22-0001	1	1	$5,200	$5,400	$10,600
2	Douglas Hlavka	01-119-24-22-0002	1	1	$5,200	$5,400	$10,600
3	Bryan Reitzner	01-119-24-22-0006			$0	$0	$0
4	Elwyn Mathei	01-119-24-22-0003	1	1	$5,200	$5,400	$10,600
5	Lon Davis	02-119-24-11-0001	1	1	$5,200	$5,400	$10,600
6	William Gage	35-120-24-44-0003	1	1	$5,200	$5,400	$10,600
7	Great Lake Enterprises	36-120-24-33-0003	0	0	$0	$0	$0
TOTALS			5	5	$26,000	$27,000	$53,000

Note: Exhibit contains estimate of assessment only. Great Lakes Enterprises assessment waived as condition of granting easement.

7684398

DECLARATION OF COVENANTS, CONDITIONS AND RESTRICTIONS

THIS DECLARATION, made on this 21 day of February, 2002, by John S. Geis, single (hereinafter referred to as "Declarant").

Metro Legal Services Inc.
Box 491

WITNESSETH:

WHEREAS, Declarant is the owner of the real property described on Exhibit "A" attached hereto and by this reference incorporated herein for all purposes, and desires to create thereon a residential community for the pleasure, recreation and general benefit of the residents of said community; and

WHEREAS, Declarant is desirous of establishing certain minimum If standards for the development of a residential development or developments located in the City of Hanover, County of Hennepin, State of Minnesota, described on Exhibit "A" attached hereto and made a part hereof, to ensure proper use and appropriate development and improvement of each residential site therein contained as to:

(a) protect the Owners of Lots against such improper use of such surrounding buildings and Lots as will depreciate the value of their property;

(b) guard against the erection thereon of structures constructed of improper or unsuitable materials;

(c) ensure adequate and reasonable development of said Property;

(d) encourage the erection of attractive improvements appropriately located to prevent inharmonious appearance and function;

(e) provide adequate setbacks, off-street parking; and

(f) in general, to benefit and burden the Lots for the purpose of facilitating the development and maintaining the desired tone of the community, and thereby securing to the Owner of each Lot the full benefit and enjoyment thereof, with no greater restriction on the free and undisturbed use of the Lots than is necessary to ensure the same advantages to the other Lots which are subject to the terms of this Declaration.

(Letters (a), (b), (c), (d), (e) and (f) above are sometimes hereinafter collectively called the Criteria for Standards").

and;

WHEREAS, the Declarant desires to provide for the preservation of the values and amenities in said community and to this end desires to subject the real property described on Exhibit "A" to the covenants, restrictions, easements, charges and liens hereinafter set forth, each and all of which is and are for the benefit of said Property and each Owner thereof; and

WHEREAS, Declarant has deemed it desirable for the pleasure and recreation of said community, and for the efficient preservation of the values and amenities in said community, to create an agency to receive the power to attend to and effectuate policies and programs that will enhance the pleasure and value of said community, and maintain, administer and enforce the covenants and restrictions, and collect and disburse the assessments and charges hereinafter created; and

WHEREAS, Declarant has incorporated, under the laws of the State of Minnesota, The Bridges at Hanover Association for the purpose of exercising the functions as aforesaid; and

WHEREAS, the residential development subject to this Declaration consists solely of separate parcels of real estate designed or utilized for detached single-family Living Units; and

WHEREAS, The Bridges at Hanover Association, a Minnesota non-profit corporation, has no obligation to maintain any building containing a Living Unit or to maintain or remove snow from any private driveway.

NOW, THEREFORE, in consideration of the premises, the Declarant hereby declares that the real property described on Exhibit "A" and such additions thereto as may hereafter be made pursuant to Article II hereof is and shall be held, transferred, sold, conveyed and occupied subject to the conditions, restrictions, easements, charges and liens hereinafter set forth, which covenants, restrictions and easements shall run with the real property described on Exhibit "A" and any additional property annexed thereto pursuant to the provisions set forth in Article II, and be binding on all parties having any right, title or interest in the hereinafter described properties or any part thereof, their heirs, successors and assigns, and shall inure to the benefit of each Owner thereof.

ARTICLE I.
Definitions

1.1 **Definitions.** The following words, when used in this Declaration, shall have the following meanings:

(a) "*Association*" shall mean and refer to The Bridges at Hanover Association, a non-profit corporation organized and existing under the laws of the State of Minnesota, and its successors and assigns.

(b) "Common Area" shall mean all real property and improvements thereon owned by the Association for the common use and enjoyment of the Owners and such others to whom the Owners may delegate this right pursuant to this Declaration, or to others that may have rights as appurtenant easements to their lots in the plat of The Bridges at Hanover under instruments recorded or to be recorded in the office of the County Recorder of Hennepin County, Minnesota. The Common Area are legally described in Exhibit "B" attached hereto.

(c) "Declarant" shall mean and refer to John S. Geis, his heirs and assigns, if such heir or assign shall acquire more than one undeveloped Lot from the Declarant for the purpose of development. Notwithstanding the foregoing, no individual or entity acquiring an undeveloped Lot from the named Developer shall become "Developer" solely by such acquisition, but only as a result of a specific assignment of Developer and/or Declarant rights, which assignment shall not be effective unless incorporated in the instrument of conveyance.

(d) "Developer" shall mean and refer to the Declarant.

(e) "Living Unit" shall mean and refer to a residential housing unit consisting of a group of rooms and hallways and attached garage which are designed and intended for use as living quarters for one family and located or to be located upon one Lot.

(f) "Lot" shall mean and refer to any tract or parcel of land designated as a Lot shown upon any recorded plat or subdivision map of the Property, with the exception of any tracts or parcels designated as Outlots.

(g) "Member" shall mean and refer to every person or entity who is a record Owner of a fee or undivided fee simple interest in any Lot which is subject by covenants of record to assessment by the Association (excluding contract sellers and including in place thereof their contract purchasers, except as to any Lot where Declarant is the contract seller, in which case Declarant shall continue to be deemed the Owner of such Lot or Lots).

(h) "Mortgage" shall mean and refer to any mortgage or other security instrument by which a Lot, or any part thereof, or any structure thereon, is encumbered.

(i) "Mortgagee" shall mean any person or entity named as the Mortgagee under any Mortgage, or any successors or

assigns to the interest of such person or entity under a Mortgage.

(j) "Owner" shall mean and refer to the record Owner, whether one or more persons or entities, of a fee simple title to any Lot (excluding contract sellers and including in place thereof their contract purchasers, except as to any Lot where Declarant is the contract seller, in which case Declarant shall continue to be deemed the Owner of such Lot or Lots) and excluding any person except Declarant having such interest merely as security for the performance of an obligation.

(k) "Permit" shall mean any Conditional Use Permit approved by the City Council of the City of Hanover authorizing and imposing restrictions and requirements for the development of the Property as a planned community development, as the same may be amended or modified by the City of Hanover.

(l) "Private Driveway" shall mean and refer to access driveways from main thoroughfares to individual Living Units.

(m) "Private Yard Area" shall mean and refer to that portion of a lot not covered by a Living Unit or by a Private Driveway.

(n) "Property" shall mean and refer to all the real property subject to this Declaration, all of which is more fully described on Exhibit "A" attached hereto and by this reference incorporated herein for all purposes.

ARTICLE II.
Additional Property Subject to this Declaration

2.1 **Additions to Existing Property.** Additional real property may become subject to this Declaration in the following manner:

(a) **Additions in Accordance with General Plan of Development.** The Developer, its successors and assigns, shall have the right, without the consent of the Members, to bring within the scheme of this Declaration the additional real property described on Exhibit "C" attached hereto and by this reference incorporated herein for all purposes, in future stages of development by December 31, 2011.

(b) Additions Authorized by Members. Additional residential property may also become subject to this Declaration upon approval of 2/3rds of the Members of each class of Members.

2.2 **Manner of Annexation.** Additions authorized under this article shall be made by filing a Supplementary Declaration of Covenants, Conditions and Restrictions with respect to the additional property, and after such filing, such additional property shall be subject to the covenants and restrictions of this Declaration. Such Supplementary Declaration shall contain such complementary additions and modifications of the covenants and restrictions contained in this Declaration as may be necessary to reflect the different character, if any, of the added properties and shall not be inconsistent with the scheme of this Declaration. In no event, however, shall such Supplementary Declaration revoke, modify or add to the covenants established by this Declaration within the existing Property.

ARTICLE III.
Membership and Voting Rights in the Association

3.1 **Membership.** Every person or entity who is an Owner of a fee or undivided fee simple interest in any Lot which is subject by covenants of record to assessment by the Association (excluding contract sellers and including in place thereof their contract purchasers, except as to any Lot where Declarant is the contract seller, in which case Declarant shall continue to be deemed the Owner of such Lot or Lots) shall be a Member of the Association. The foregoing is intended to exclude persons or entities except Declarant who hold an interest merely as a security for the performance of an obligation until such time such person acquires a fee simple interest in such Lot by foreclosure or by any proceeding in lieu thereof. Membership shall be appurtenant to and may not be separated from the ownership of any Lot which is subject to assessment by the Association. Ownership of such Lot shall be the sole qualification for membership.

3.2 **Voting Rights.** The Association shall not have nor shall it issue any capital stock, and may only have 2 classes of voting membership.

(a) **Class A.** Class A members shall be all those Owners as defined in Section 1.1(i), with the exception of the Declarant. Each Class A member shall be entitled to 1 vote for each Lot in which he holds the interest required for membership by Section 3.1. When more than 1 person holds such interest in any Lot, all such persons shall be Members. The vote for such Lot shall be exercised as they, among themselves, shall determine, but in no event shall more than 1 vote be cast with respect to any Lot.

(b) **Class B.** The Declarant shall be the sole Class B member and shall be entitled to 3 votes for each Lot owned, including any Lot in which Declarant has an interest as the contract seller. Class B membership shall cease and

be converted to Class A membership upon the occurrence of the first of the following events:

(i) when the total number of votes outstanding in the Class A membership equals or exceeds the total number of votes outstanding in the Class B membership; or

(ii) on December 31, 2011.

3.3 **Suspension of Voting Rights.** The right of any Member to vote shall be suspended during any period in which such Member shall be delinquent in the payment of any assessment levied by the Association. Such rights may also be suspended, after notice and hearing, for a period not to exceed 60 days for any infraction of any rules or regulations published by the Association.

ARTICLE IV.
Covenants for Maintenance Assessments

4.1 **Creation of Lien and Personal Obligation of Assessments.** The Declarant, for each Lot owned within the Property, hereby covenants, and each Owner of any Lot by acceptance of a conveyance therefore, whether or not it shall be so expressed in the deed or other conveyance, shall be and hereby is deemed to covenant and agree to pay the Association:

(a) general assessments or charges; and

(b) special assessments for capital improvements, such assessments to be established and collected from time to time as hereinafter provided.

The general and special assessments, together with such interest thereon and costs of collection thereof as hereinafter provided, shall be a charge on each such Lot and shall be a continuing lien on each such Lot against which each such assessment is made. Each such assessment, together with interest thereon and all costs of collection thereof as hereinafter provided, shall also be the personal obligation of each person who was the Owner of each such Lot at the time when the assessment fell due. The personal obligation for delinquent assessments shall not pass to such Owner's successors in title unless expressly assumed by them. All such assessments shall be fixed, established and collected from time to time in the manner provided in this article.

4.2 **Purpose of Assessments.** The assessments levied by the Association shall be used exclusively to promote the health, safety and welfare of the Owners and residents of the Property. Assessments shall not be used for maintenance of any Living Units, Private Driveway, or Private Yard Area, but shall be used

for bridge maintenance, landscape maintenance, including lawn mowing and trimming and pruning of trees and shrubberies located in the Common Area; sidewalks, trails and trailways, and Common Area developed for open space and recreational purposes, project monuments and appurtenances, and construction, maintenance, repair and replacement of all pipes, wires or other conduits of matter or energy which are initially installed by the Developer to serve the Common Area.

4.3 **Maximum Assessments.** The amount of the maximum assessments shall be determined by the Board of Directors as hereinafter provided, but subject, however, to the following restrictions:

(a) Until January 1 of the year immediately following the conveyance of fee title to the first Lot by the Developer to an Owner, the maximum general assessment shall be at the monthly rate of $75.00 per Lot.

(b) From and after January 1 of the year immediately following the year of the conveyance of the first Lot by the Developer to an Owner, the general assessment may not be increased each year more than 5% above the general assessment for the previous year without a vote of the membership.

(c) The general assessment may be increased above such 5% amount by a vote of 2/3rds of each class of Members who are voting in person or by proxy at a meeting called for such purpose.

(d) The Board of Directors of the Association may, after consideration of the current assessment costs and future needs of the Association, fix the actual assessment for any year at any lesser amount.

4.4 **Special Assessments for Capital Improvements.** In addition to the general assessments authorized by Section 4.3, the Association may levy, in any assessment year, a special assessment applicable to that year only for the purpose of defraying in whole or in part the cost of any construction or reconstruction, unexpected repair or replacement of a capital improvement; provided, however, that any such assessment shall require the assent of 2/3rds of the votes of each class of Members who are voting in person or by proxy at a meeting duly called for this purpose.

4.5 **Notice of Meetings.** Written notice of any meeting called for the purpose of taking any action authorized under Section 4.3 or 4.4 shall be sent to all Members, and to any Mortgagee who shall request such notice in writing, no less than 30 days nor more than 60 days in advance of such meeting. At the first such meeting called, the presence of Members or of proxies entitled to cast 60% of all votes shall constitute a quorum. If

the required quorum is not present, another meeting may be called subject to the same notice requirement, and the required quorum at the subsequent meeting shall be 1/2 of the required quorum at the preceding meeting. No such subsequent meeting shall be held later than 60 days following the preceding meeting.

4.6 **Uniform Rate of Assessment.** General and special assessments must be fixed at a uniform rate for all Lots owned by persons, firms or corporations, except as specifically provided in Section 4.7.

4.7 **Date of Commencement of Assessments; Due Dates.** The assessments provided for herein shall commence on the first day of the month following the date a Certificate of Occupancy for a Living Unit constructed upon a Lot is issued and shall, for the remainder of the year, be payable upon demand. No Lot shall be assessed prior to the issuance of a Certificate of Occupancy for a Living Unit.

4.8 **Duties of the Board of Directors.** The Board of Directors of the Association shall fix the date of commencement and the amount of the assessment against each Lot for each assessment period at least 30 days in advance of such date of commencement of such period, and shall at that time prepare a roll of the Lots and assessments applicable thereto which shall be kept in the office of the Association and shall be open to inspection by any Owner. Written notice of the assessment shall thereafter be sent to each Owner subject to such assessments. The Association shall, upon demand and upon the payment of a reasonable charge, furnish a written certificate signed by an officer of the Association setting forth whether or not assessments upon particular Lots have been paid. Such certificate shall be conclusive evidence of payment of any assessments therein stated to have been paid.

4.9 **Effect of Nonpayment of Assessment; the Personal Obligation of the Owner; the Lien; Remedies of Association.**

(a) If any assessment is not paid on the date when due, then such assessment shall become delinquent and shall, together with such interest thereon and costs of collection thereof as hereinafter provided, thereupon become a continuing lien on such Lot or Lots, which shall bind such Lot or Lots in the hands of the then Owner, his heirs, devisees, personal representatives, successors and assigns. The personal obligation of the then Owner to pay such assessment, however, shall remain his personal obligation and shall not pass to his successors in title unless expressly assumed by them. Such lien shall run in favor of the Association and shall be superior to all other liens and encumbrances on such Lot except for the following:

(i) liens for general real estate taxes and special assessments levied by any governmental authority; and

(ii) the lien of any first Mortgage as provided in Section 4.10 hereof.

(b) All other lienors acquiring liens on any Lot after this Declaration shall have been recorded, and whose liens shall also have been recorded, shall be deemed to consent that their liens shall be and remain inferior to future liens provided for herein, whether or not such consent has been expressed in the instruments creating their liens.

(c) To evidence a lien for sums assessed pursuant to this article, the Association shall prepare a written notice of lien setting forth the amount of the assessment, the date due, the amount remaining unpaid, the name of the Owner of the Lot and a description of the Lot, and shall file or record the same, but such notice of lien shall not be recorded until such assessment has been wholly or partially unpaid for at least 30 days from the due date. Such lien may be enforced and foreclosed by the Association, either by action or advertisement, in the same manner in which mortgages on real property may be foreclosed in Minnesota or, alternatively, in the manner prescribed by Minnesota Statutes for the foreclosure of a mechanic's lien. Each Owner, by acceptance of a deed for any Lot, does further hereby give full and complete power of sale to the Association and does consent to a foreclosure of the assessment lien by advertisement. In the event that the Association shall prevail in any such foreclosure, the person personally obligated to pay the same shall be required to pay all costs of foreclosure, including but not limited to reasonable attorneys' fees. All such costs and expenses and any assessments against the Lot which shall become due during the period of foreclosure and redemption shall be added to and become a part of the amount secured by said lien. The Association shall have the right and power to bid at the foreclosure sale or other legal sale and to acquire, hold, convey, lease, rent, encumber, use and otherwise deal with the Lot as the Owner thereof. A release of the notice of lien shall be executed by an officer of the Association and recorded upon payment of all sums secured by such lien.

(d) Any encumbrancer holding a lien on any Lot may pay, but shall not be required to pay, any amounts secured by the lien created and authorized by this section, and upon payment of such sums, such encumbrancer shall be subrogated to and shall be entitled to an assignment of

all rights of the Association with respect to such lien, including but not limited to priority as to any other lien or interest in such Lot, except the right of first mortgagees as provided in Section 4.10.

(e) The Association shall, upon written request, report to any first Mortgagee or other encumbrancer of a Lot the amount of the assessments remaining unpaid for a period longer than 30 days after the same shall become due.

(f) Any assessments not paid within 30 days after the due date shall bear interest from the due date until paid at the rate of 8% per annum. No Owner may waive or otherwise escape personal liability for the assessments provided for herein by abandonment of his or her Lot. A suit to recover a money judgment for such expenses, with costs of collection and interest as provided for herein, shall be maintainable by the Association without foreclosing or waiving the lien securing the same.

4.10 **Subordination of Lien to First Mortgages.** The lien of assessments provided for herein shall be subordinate to the lien of any first Mortgage, and the sale or transfer of any Lot shall not affect the assessment lien. However, the sale or transfer of any Lot pursuant to the foreclosure of a first Mortgage, or pursuant to any other proceeding or arrangement in lieu of such foreclosure, shall extinguish the lien of such assessments as to installments which became due prior to the effective date of such sale, transfer or acquisition by the Mortgagee to the end that no assessment liability shall accrue to an acquiring Mortgagee except with respect to installments of assessments becoming due after possession has passed to such acquiring Mortgagee, whether such possession has passed at the termination of any period of redemption or otherwise, and in the event of the extinguishment of such assessment lien as aforesaid, the entire amount of such unpaid assessment shall be reallocated and assessed against and payable by the Owners of all other Lots exclusive of such mortgaged Lot. No such sale, transfer or acquisition of possession shall relieve an Owner of a Lot from liability for any assessments thereafter becoming due or from the lien thereof, or shall relieve the person personally obligated to pay the assessments which were levied prior to the transfer of such property from the personal obligation to pay the same.

ARTICLE V.
Easements

5.1 **Easements.** In addition to the easements, covenants, restrictions and conditions concerning architectural and exterior controls, all Living Units and Lots shall be subject to easements and covenants hereinafter specifically described for the benefit of the property or for the limited benefit of specified adjoining Lots, all as more fully set forth hereinafter in this article.

5.2 **Easements for Utilities and Drainage.** Utility and drainage easements are reserved as dedicated as shown on the recorded plat of The Bridges at Hanover. Within said easements, no building, structure, planting, fill or other material shall be placed or permitted to remain which may damage or interfere with the installation and maintenance of utilities or which may change the direction or impede the flow of water over said easements.

5.3 **Public Underground Utility Easements.** Each Lot over which a public utility easement has been dedicated, as shown on the recorded plat of the Property, shall be subject to a right and easement for underground general utility purposes over that portion of such Lot which is burdened with such dedicated public utility easements. Such utility purposes shall include but not be limited to sewer, water, electrical, cable television and telephone purposes, including the right to build, construct, reconstruct, rebuild, repair, maintain and operate underground sewer, water, electrical mains and telephone cables, and any surface connections to such underground mains, along with the right to enter upon and open the ground for such purposes, providing that all such openings shall be filled and the surface restored to its former condition. All such utility easements shall jointly run in favor of and inure to the benefit of the Owners of the Lots and any and all public authorities or utility companies maintaining or operating any utility facility upon such easement area.

5.4 **Roadway Easement.** As a benefit for all Living Units or Lots and as a burden affecting Outlots A, H, I and J, Declarant grants and conveys to each Lot described on Exhibit A and to each of the Owners for their use and for the use of their permittees in common with others entitled to use the same, a non-exclusive easement for egress and ingress for vehicular and pedestrian traffic (specifically including the passage of motor vehicles). The non-exclusive easements granted herein are and shall be for ingress and egress from each respective Lot over and across that part of the Outlots referred to above abutting the front or side lot line of each Lot for purposes of crossing that part of said Outlots (comprised by a 10-foot strip) for purposes of access from the adjacent public road to any Lot which abuts such 10-foot strip, which is part of an Outlot, so that each Lot owner shall have access from the adjacent street to his Lot over the said 10-foot strip common area.

5.5 **Utility Easement.** As a benefit for all Living Units or Lots and as a burden affecting Outlots A, H, I and J, Declarant grants and conveys to each Lot described on Exhibit A and to each of the Owners for their use and the use of utilities or utility companies for installation, maintenance, repair and replacement of water mains and laterals, telephone and electrical conduit systems, gas mains and other public facilities necessary for use of the improvements constructed on such Lots. The non-exclusive easement so granted shall be from, under, and over the said abutting 10-foot strip from the adjacent public street and over

the 10-foot strip contained within the aforesaid Outlots referred to in this paragraph above, to the Lot abutting such strip so that each Lot abutting a 10-foot strip within an Outlot shall have an easement for the purposes of obtaining and using utilities from and in the adjacent street.

ARTICLE VI.
Approval by Architectural Control Committee Prior to Construction

6.1 **Purpose and Authority.** In order to maintain the Criteria for Standards, to prevent the impairment of the attractiveness of the individual Lots and to maintain the desired tone of the residential community, and thereby secure to each Owner the full benefit and enjoyment of its Lot with no greater restriction on the free and undisturbed use of a Lot than is necessary to ensure the same advantages for the other Owners, an Architectural Control Committee is hereby established.

6.2 **Membership.** The Architectural Control Committee (hereinafter referred to as "Committee") shall be established and composed as follows:

(a) Until a Certificate of Occupancy has been issued for Living Units constructed upon all of the Lots described on Exhibit "A", the Declarant shall name 3 individuals to serve as the Committee.

(b) Following the issuance of Certificates of Occupancy as provided in Section 6.2(a) above, the Architectural Control Committee shall be composed of the Board of Directors of the Association or 3 or more representatives appointed by the Board of Directors.

(c) In the event of the death or resignation of any member of the Committee, the remaining members shall have full authority to designate a successor.

(d) The members of the Committee or its designated representatives shall be entitled to reasonable compensation for services performed pursuant to Article VI.

6.3 **Procedure.** Before commencing any permanent improvement on or to any of the described Lots, including landscaping, the construction or external alteration of any building, enclosure, fence or any other structure, the Owner shall first submit a site plan and plans and specifications in conformance with the requirements of the Permit and, including as applicable, in the sole discretion of the Committee, architectural, engineering and landscape plans, for the written approval of the Architectural Control Committee. The Committee shall be entitled to charge, and the person or persons submitting the plans shall pay, a fee of $100.00 for each set of plans submitted for approval which will

not be refunded whether or not the plans are ultimately approved. Fees collected shall be payable to the Association.

The Committee's approval or disapproval shall be in writing. In the event the Committee or its designated representative fails to approve or disapprove within 30 days after plans and specifications have been submitted to it, or within said 30-day period submit the issue to arbitration as hereinafter provided, approval will not be required.

The Committee shall take into consideration the planned location of the proposed improvement, its conformity and harmony of external design with existing or planned improvements in The Bridges at Hanover and the location of the improvement with respect to topography and finished ground elevation. Conformity by the Owner with such requirements as may be imposed by the City of Hanover in connection with the issuance of a building permit for the Lot shall not create a presumption that such planned improvement is compatible and in harmony with the existing or planned development of other Lots. Conformity by the Owner with such requirements as may be imposed by the Committee in connection with the issuance of Committee approval shall not create a presumption that such planned improvement is in accordance with such requirements as may be imposed by the City of Hanover in connection with issuance of a building permit upon the Lot. In the event the approval of the Committee is not obtained within the 30-day period and a dispute exists between the Owner and the Committee in regard to a proposed improvement requiring Committee approval, the matter shall be determined by arbitration in the following manner:

(a) Either party may, by written notice to the other within the 30-day period required for approval or disapproval of plans and specifications, appoint an arbitrator, which appointment shall be noted in writing to the other party. The other party shall, by written notice within 5 days after receipt of such notice by the first party, appoint a second arbitrator and in default of such second appointment, the first arbitrator appointed shall be the sole arbitrator.

(b) When 2 arbitrators have been appointed as hereinabove provided, they shall, if possible, agree on a third arbitrator and shall appoint him or her by written notice, signed by both of them, with a copy mailed to each party therein within 5 days after such appointment.

(c) In the event 5 days shall elapse after the appointment of the second arbitrator without notice of appointment of a third arbitrator as hereinabove provided, then either party or both may, in writing, within 10 days after the original appointments, request the City

Planner of the City of Hanover, State of Minnesota to appoint the third arbitrator.

(d) On appointment of 3 arbitrators as hereinabove provided, such arbitrators shall hold an arbitration hearing at such place as they may designate within 30 days after such appointments. At the hearing, the rules of evidence of the State of Minnesota shall apply and the 3 arbitrators shall allow each party to present its case, evidence and witnesses, if any, in the presence of the other party, and shall render their decision, including a provision for payment of costs and expenses of arbitration to be paid by one or both of the parties hereto as the arbitrators deem just. Any costs and expenses charged to the Committee shall be paid by the Association.

(e) The decision of the majority of the arbitrators shall be binding on the parties hereto.

ARTICLE VII.
Restrictions Applicable to Lots

7.1 No Lot shall be used except for residential purposes. No Living Unit shall be erected, altered, placed or permitted to remain on any Lot other than one single-family dwelling not to exceed 2 stories in height and an attached garage for at least 2 cars. No garages shall be erected on any site except attached garages and no attached garage for more than 3 cars shall be permitted without the express written approval of the Architectural Control Committee.

7.2 No Lot shall be used except for residential purposes and no Lot shall be subdivided or split by any means whatsoever into any greater number of residential Lots, nor into any residential plot of smaller size, without the express written consent of the Developer and the City of Hanover.

7.3 Signs. No "For Sale" signs larger than 432 square inches (standard 18" x 24") will be permitted on any Lot (except those of Developer or third parties designated by Developer prior to the conveyance of the last Lot by Developer) No other signs (including, without limitation, garage sale, identification, advertising or directional signs) shall be permitted without the prior approval of the Committee.

7.4 No Pets and Animals. No birds, animals or insects shall be kept on any Lot except dogs, cats and other common household pets, provided that they are not kept, bred or maintained for any commercial purposes.

7.5 Home Occupation. No profession or home industry shall be conducted in any Living Unit or on any Lot without the

specific written approval of the Developer as long as it has Class "B" votes as hereinbefore defined or by the Committee thereafter. The Developer or the Committee, whichever has authority at the time in question, in its discretion, upon consideration of the circumstances in each case and particularly the effect on surrounding property, may permit a Lot to be used in whole or in part for the conduct of a profession or home industry. No such profession or home industry shall be permitted, however, unless it is considered by the Developer or by the Committee, whichever then has authority, to be compatible with the residential neighborhood.

7.6 **Nuisances.** No weeds, underbrush or other unsightly growths shall be permitted to grow or remain upon a Lot. No refuse pile or unsightly objects shall be allowed to be placed or suffered to remain on a Lot. In the event that an Owner of any Lot shall fail or refuse to keep such premises free from weeds, underbrush or refuse piles or other unsightly growths or objects, then the Developer or the Committee may enter upon such lands and remove the same at the expense of the Owner and such entry shall not be deemed as trespass, and in the event of such a removal, a lien shall arise and be created in favor of the Association and against such Lot for 125% of the full amount chargeable to such Lot, and such amount shall be due and payable within 30 days after the Owner is billed therefore. No Lot shall be used in whole or in part for the storage of rubbish of any character whatsoever, nor for the storage of any property or thing that will cause such Lot to appear in an unclean or untidy condition or that will be obnoxious to the eye; nor shall any substance, thing or material be kept upon any Lot that will emit foul or obnoxious odors, or that will cause any noise that will or might disturb the peace, quiet, comfort or serenity of the occupants of surrounding property. The outside storage of an unlicensed motor vehicle upon a Lot shall also be considered a nuisance.

7.7 **Storage.** Outside storage of trash and garbage containers, shall not be allowed unless effectively screened from view outside the Lot. The design of any screening enclosures must be approved by the Committee. Household trash and garbage shall be regularly collected and may be kept outside only if in tightly-covered containers. Garbage service collection shall be contracted for by the Association; provided, however, that upon vote of not less than 75% of the members entitled to cast votes, garbage service will be contracted individually.

(a) Except as may be incidental to delivery or providing service, no commercial vehicle shall be stored or parked on any Lot outside of a garage.

7.8 **Leasing.** Any lease between an Owner and a non-owner occupant shall be in writing and shall provide that the terms of the lease shall be subject in all respects to the provisions of this Declaration, the Articles of Incorporation and By-Laws of the Association, and shall provide that any failure by the

non-owner occupant to comply with the terms of such documents shall be default under the lease. Other than the foregoing, there shall be no restrictions on the use of a Living Unit by a non-owner occupant.

7.9 **Storage Tanks.** No permanent storage tanks of any kind shall be erected, placed or permitted on any Lot.

7.10 **Temporary Structures.** No structure of temporary character, trailer, basement, tent, shack, garage, barn or other building shall be used on any Lot at any time as a residence, either temporarily or permanently.

7.11 **Driveways.** Driveways must be constructed of concrete, bituminous or other hard surface material. Material and installation shall be subject to approval of the Architectural Control Committee. Driveways must be installed within 1 year of the date a Certificate of Occupancy is issued for any dwelling constructed upon a Lot.

7.10 **Completion of Construction of Improvements.** All construction work shall, upon approval of plans by the Committee, be completed within one year of the date of approval; all improvements shall be constructed in conformity with the then existing building codes of the City of Hanover, Minnesota; and all building plans shall be prepared by or under the supervision of a registered architect, a builder or a qualified design professional. If any structure is begun after approval of the plans as provided in Article VI and is not completed within one year after the date of approval of said construction and, in the judgment of the Developer or the Committee, is offensive or unsightly in appearance, the Developer or the Committee may take such steps as may be necessary to make the Property harmonious with other properties, such steps including completion of the exterior of the structure, screening or covering the structure, or any combination thereof, or similar operations. The amount of any expenditure made in so doing shall be the personal, joint and several obligation of the Owner or Owners and shall be a lien on the Lot and may be foreclosed in the same manner as provided in Section 4.9(c). The lien herein shall not be valid as against a subsequent bona fide purchaser of the Lot in question, unless a statement setting forth the claim shall have been filed for record in the office of the County Recorder and/or Registrar of Titles of Hennepin County, whichever is appropriate, or unless a suit and appropriate Lis Pendens to foreclose the lien shall have been filed of record in the office of the County Recorder and/or Registrar of Titles of Hennepin County prior to the recordation of the deed conveying the Lot in question to said purchaser.

ARTICLE VIII.
Enforcement of Easements, Restrictions and Covenants

8.1 Each of the easements, restrictions and covenants as set forth herein shall be enforceable by the Declarant during the period specified in paragraph 6.2(a) and by any Owner of any Lot which is benefitted by such easement, restriction or covenant or any of their respective successors in title, but no other person shall have any right to enforce any such easements or restrictions and covenants, nor shall any other person other than the Declarant or such Owner, the Owner's tenants, invitees and licensees have any interest in the easements, restrictions and covenants hereby created and declared. Nothing contained herein shall constitute a dedication of any interest in such easements, restrictions and covenants to the public or give any members of the public any rights hereunder. Failure to enforce the easements or restrictions and covenants herein contained shall in no way be deemed a waiver of the right to do so thereafter.

8.2 **Remedies for Violation.** In the event of any violation or attempted or threatened violation of the terms hereof or any interference or attempted or threatened interference with the rights and obligations herein granted, each of the easements, restrictions and covenants may be enforced by a proceeding at law or in equity or both. If any person entitled to enforce the easements, restrictions and covenants shall elect to enforce the terms hereof by a proceeding in equity, such person may petition for a restraining order or injunction, temporary or permanent, prohibiting such violation or interference and demanding compliance with the provisions, which restraining order and injunction shall be obtainable upon proof of the existence of such violation or attempted or threatened violation or interference and without the necessity of proof of the inadequacy of legal remedies or irreparable harm.

8.3 **Cost of Enforcement.** If any of the easements or restrictions and covenants created herein are enforced by appropriate proceedings by any Owner or the Declarant, and if such Owner or the Declarant shall prevail in any such proceeding, such prevailing party may be reimbursed for all or any part of the costs incurred in the enforcement thereof, including but not limited to reasonable attorneys' fees, costs and expenses.

8.4 **Invalidation.** Invalidation of any of these covenants or restrictions by judgment or by court order shall not affect any of the other provisions which shall remain in full force and effect.

ARTICLE IX.
Insurance

9.1 **Liability Insurance; Fidelity Bonds.** The Board of Directors of the Association or its duly authorized agent shall obtain a broad form of public liability insurance insuring the Association, with such limits of liability as the Association shall determine to be necessary, against all acts, omissions to act and negligence of the Association, its officers, directors and its employees and agents, and for the members of the Architectural Control Committee. The Association's Board of Directors shall also provide fidelity bonds providing protection to the Association against loss by reason of acts of fraud or dishonesty on the part of the Association's directors, managers, officers, employees or volunteers who are responsible for the handling of funds of the Association, in an amount sufficient to provide no less protection than one and one-half times the estimated annual operating expenses and reserves of the Association.

9.2 **Annual Review of Policies.** All insurance policies shall be reviewed at least annually by the Board of Directors in order to ascertain whether the coverage contained in the policies is sufficient.

ARTICLE X.
Notice of First Mortgagees

10.1 **Mortgagee's Rights.** Notwithstanding any other provisions of this Declaration, the Articles of Incorporation or the By-Laws of the Association, the provisions of this Article X shall control, and in the event of a conflict between the provisions of this article and the provisions of such Declaration, Articles or By-Laws, the provisions of this article shall control.

10.2 **Notice of Default.** Any Mortgagee holding a first Mortgage on a Lot, who shall have previously filed a written request with the Association, shall be entitled to written notification of any default by the mortgagor or Owner of such Lot or his or her heirs, successors or assigns in the payment of any assessment or the performance of any other duties or obligations herein set forth which shall have remained in default for a period of 30 days or more. The neglect or failure of the Association to tender such notice to the Mortgagee shall toll the running of any time limits applicable to the procedure for the collection of such assessment or remedies available to the Association on account of such default.

10.3 **Consent Required.** Without the prior written approval of 66-2/3% of the holders of first mortgage liens against all Lots, the Association shall not be entitled to:

(a) by act or omission, seek to abandon, partition, subdivide, encumber, sell or transfer any Property which the Association shall have acquired for the benefit of the Owners;

(b) change the method of determining the obligations, assessments, dues or other charges which may be levied against a Lot;

(c) by act or omission, change, waive or abandon the scheme of exterior and architectural controls, as hereinabove set forth.

ARTICLE XI.
Ponding areas

11.1 **Maintenance of Ponding Areas.** The Association may undertake to maintain any Ponding Areas upon the Property as located and shown on any final development plans and/or the Plat on file with the City of Hanover. In the event the Association has not undertaken to maintain the same, individual Owners of Lots containing ponding areas shall be obligated to maintain the same in accordance with Article IV of this Declaration. In the event the Association undertakes the obligation to maintain the ponding areas, the cost of such maintenance shall be accessed pro-rata against all Lots in the Property in accordance with Article IV of this Declaration.

11.2 **Restrictions on Use of Ponding Areas.** The Association shall have the right to control and restrict the utilization of ponding areas by Owners, their families, guests and invitees and shall be entitled to enact and enforce rules and regulations in connection therewith.

11.3 **Access to Ponding Areas.** Each Owner of a Lot containing a ponding area as shown on the final development plans and the plat on file with the City of Hanover does, in accepting a conveyance of said Lot, grant to the Association a specific easement in the areas dedicated for utility and drainage easements as shown on and dedicated in the Plat of the Bridges at Hanover for access to such ponding areas for the purpose of performing the maintenance and enforcing the restrictions set forth in Section 11.1 and Section 11.2.

ARTICLE XII
General Provisions

12.1 **Enforcement by Association.** The Association shall have the right to enforce by a proceeding at law or in equity all restrictions, conditions, covenants, reservations, liens and charges now or hereafter imposed by the provisions of this Declaration, including but not limited to the collection of all assessments. In the event that the Association should employ the services of an attorney in connection with a breach of the terms

hereof, or in connection with the enforcement of the terms hereof, and if the Association shall prevail in any such action, such Owner shall pay, in addition to all other sums due, the Association's reasonable attorneys' fees, costs and expenses. The failure by the Association to enforce any covenant or restriction herein contained shall in no event be deemed a waiver of the right to do so thereafter. If these restrictions are enforced by appropriate proceedings by an Owner, such Owner may be reimbursed by the Association for all or any part of the costs incurred, as the Board of Directors of the Association shall in its sole discretion determine.

12.2 **Severability.** The invalidation of any one of these covenants or restrictions by legislation, judgment or court order shall in no way affect any other provision which shall remain in full force and effect.

12.3 **Amendments.** The provisions of this Declaration may be amended during the first 20 years by an instrument signed by Members entitled to cast no less than 90% of the votes of each class of membership, and thereafter by an instrument signed by Members entitled to cast no less than 75% of such votes. No amendment shall be effective until it shall have been properly recorded. Amendments or modifications of the Permit by the City of Hanover shall not be construed as an amendment to this Declaration for purposes of this paragraph.

12.4 **Limitation on Declaration.** The covenants, restrictions, easements, conditions and reservations imposed or established by or created under this Declaration, or any amendment hereto, shall run with and bind the Property for a period of 30 years from the date of the recordation of this Declaration and may be enforced as provided herein. After the expiration of said 30-year period, all of such covenants, restrictions, easements, conditions and reservations shall continue to run with and bind the Property for successive periods of 10 years each unless removed, changed or amended in whole or in part by Members entitled to cast 75% of each class of votes and evidenced by a recorded instrument executed by duly authorized officers of the Association.

12.5 **Construction and Conflict.** In the event of any apparent conflict between the Articles of Incorporation and the By-Laws of the Association and terms of this Declaration, this Declaration shall control. In the event of any apparent conflict between the Articles of Incorporation and the By-Laws of the Association, the terms of the Articles shall control.

12.6 **Rules and Regulations.** The Board of Directors of the Association may from time to time adopt such rules and regulations as the Board, in its sole discretion, deems appropriate or necessary, including, without limiting the generality of the foregoing, additional rules and regulations

concerning the use of parking areas, and additional rules and regulations concerning the appearance of each Lot.

12.7 **Rights of Declarant.** Until the last Lot is sold and conveyed to an Owner other than the Declarant, the following activities by Declarant, or with the written consent of Declarant, will not be deemed violations of restrictions contained in this Declaration:

(a) the use of a Lot or Lots for model and sales office purposes;

(b) the storage of a construction trailer, equipment, materials and earth during the construction of new Living Units;

(c) the display of signs advertising the Property or new Living Units and the maintenance of temporary fencing, walkways, landscaping and berming in the vicinity of model and sales units.

12.8 **Variances.** The restrictions applicable to Lots as specified in Article VII of this Declaration are intended for the benefit of all property Owners. The Declarant, however, acknowledges that exceptional conditions of a particular Lot may create peculiar and practical difficulties mitigating against the strict enforcement of a provision contained in Article VII. In the event an Owner believes that such exceptional conditions on a Lot create a hardship or special situation, an application for a variance may be made by an Owner to the Committee in accordance with Section 6.3 of this Declaration. An application for variance shall state on the application the reasons for allowing the variance, including:

(a) that there are special circumstances or conditions affecting the Lot such that the strict application of a provision of Article VII would deprive the Owner of the reasonable use of the Lot;

(b) the variance is necessary for the preservation and enjoyment of a substantial property right of the Owner;

(c) the granting of the variance will not be detrimental to the public welfare or injurious to other Owners or Lots subject to the Declaration;

(d) that the issuance of the variance will not have an adverse effect upon the health, welfare and safety of the Owners benefitted by this Declaration.

In considering a request for a variance from the strict application of Article VII of this Declaration, the Committee shall make a finding showing that all of the foregoing conditions exist and the Committee may impose any reasonable condition in

the granting of such variance in order to protect other Lots and Owners.

The decision of the Committee shall be final in regard to any application for variance and such decision shall not be subject to appeal either by arbitration or litigation. The granting of a variance by the Committee shall not be binding upon the City of Hanover, nor shall the granting of the variance by the City of Hanover be binding on the Committee.

John S. Geis

STATE OF MINNESOTA)
) ss
COUNTY OF ~~HENNEPIN~~ Wright

21st The foregoing instrument was acknowledged before me this day of February, 2002, by John S. Geis, single.

LACY ANN NYGAARD
NOTARY PUBLIC - MINNESOTA
My Commission Expires Jan 31, 2005

Notary Public Wright County, MN

THIS INSTRUMENT WAS DRAFTED BY:

Miller Law Firm, P.A. - New Hope
4900 Highway 169 North, Suite 106
New Hope, MN 55428
(763) 542-3030

2002 AND PRIOR TAXES PAID
TAXPAYER SERVICES
TRANSFER ENTERED

MAR 13 2002

HENNEPIN COUNTY MINN.
DEPUTY

EXHIBIT "A"

Lots 1 through 9, inclusive, Block 1;

Lots 1 through 8, inclusive, Block 2;

Lots 1 through 8, inclusive, Block 3;

Lots 1 through 13, inclusive, Block 4;

Lots 1 through 15, inclusive, Block 5;

Lots 1 through 8, inclusive, Block 6;

Lots 1 through 7, inclusive, Block 7;

Lots 1 through 3, inclusive, Block 9;

Outlots A, B, C, D, H, I and J,
all in The Bridges at Hanover, according to the
recorded plat thereof, Hennepin County, Minnesota.

EXHIBIT "B"

(Common Area)

Outlots A, B, C, D, H, I and J,
all in The Bridges at Hanover, according to the
recorded plat thereof, Hennepin County, Minnesota.

EXHIBIT "C"

(Additional Land)

Outlot E, The Bridges at Hanover, Hennepin County, Minnesota.

11D/5 7684398

S

OFFICE OF COUNTY RECORDER
HENNEPIN COUNTY, MINNESOTA

CERTIFIED FILED AND OR
RECORDED ON

2002 MAR 26 PM 3: 25

AS DOCUMENT NO. 7684398

CO. REC.

BY _____ DEPUTY

25 —

7684399

C:\MyFiles\Corporation\BridgesHanover\DeclarationEasements01.wpd

DECLARATION OF EASEMENTS

THIS DECLARATION OF EASEMENT (the "Declaration") made as of the 21 day of February, 2002, by John S. Geis, single, (hereinafter referred to as "Declarant").

Metro Legal Services Inc.
Box 491

RECITALS

Declarant is the owner of the following Parcels of land situated in the City of Hanover, County of Hennepin, State of Minnesota, to-wit:

Parcel I: Outlots A, B, C, D, H, I and J, The Bridges at Hanover, according to the plat thereof;

Parcel II: Lots 1 through 37, inclusive, Block 8, The Bridges at Hanover, according to the plat thereof;

Parcel III: Lots 1 trough 6, inclusive, Block 10, and Outlot F, all in The Bridges at Hanover, according to the plat thereof; and

Parcel IV: Lot 40, Block 8, The Bridges at Hanover, according to the plat thereof.

The Declarant desires to declare and establish as hereinafter provided, perpetual non-exclusive easements in, under, over and across Parcel I for the benefit of and appurtenant to said Parcels II, III and IV, all as hereinafter more particularly described.

NOW, THEREFORE, the Declarant does by this Declaration for himself, his heirs and assigns, hereby create non-exclusive easements for the purposes and as hereafter more particularly described, for the mutual benefit of the lands described as Parcels II, III and IV, to-wit:

FIRST: a perpetual non-exclusive easement for the benefit of Parcels II, III, and IV, over, under and across that part of Parcel I, described below which easement shall be appurtenant to and run with title to the land described in Parcels II, III, and IV and for purposes of pedestrian ingress and egress, including nonmotorized bicycles and wheelchair use to and from such Parcels over and across the trail or walkway area to be constructed over Outlots A, D, H, I and J.

SECOND: a perpetual non-exclusive easement for the installation, maintenance and replacement of

sanitary and storm sewer, water, gas, electrical, telephone, cable television, and other utility lines serving or able to serve Parcels II, III, and IV and for the mutual benefit of Parcels II, III, and IV, and over, under and across that parts of Parcel I being strips of land 10-feet in width and abutting a public street as shown and dedicated in the plat of The Bridges at Hanover.

THIRD: a perpetual non-exclusive easement for drainage purposes for the mutual benefit of Parcels II, II, and IV over and across that part of Outlots A, B, C and D shown as burdened with a dedicated public drainage easement as the same is shown and dedicated on the plat of The Bridges at Hanover.

FOURTH: a perpetual non-exclusive easement for pedestrian egress and ingress, including nonmotorized bicycles and wheelchairs, to and from Outlot A and for the use and enjoyment of that part of Outlot A developed for open space and recreational purposes.

Any owner of a benefitted tract of real property may delegate such right of enjoyment of the recreational space to the members of the party, family, tenants, guests and invitees.

1. Any and all costs or expenses incurred regarding the maintenance, repair or replacement of the trails (access strips), drainage (and the recreational area within Parcel I) shall be shared between the owners of the entire premises within the plat of The Bridges at Hanover, excepting the Outlots and Lots 38 and 39, Block 8, The Bridges at Hanover, and shall be shared between the owners of the entire premises within the plat of The Bridges at Hanover on the following basis:

Parcels II and III (each living unit)	42/128ths
Parcel IV	15/128th
Lots platted as single family lots in The Bridges at Hanover	71/128th*

*provided that if Outlot E is changed to a single family residential lot, it shall also share as an additional single family lot and the denominator shall be increased to 129.

2. No owner may exempt himself from the liability from maintenance, repair or replacement of the trail, recreational and drainage improvements or uses by waiver of the use or enjoyment of any of the easements or by the abandonment of the Lot.

3. Each of the owners of the premises described herein covenants with each Owner of the other lot or tract of land, and each Owner of a lot described herein, by acceptance of a deed therefore, whether or not it shall be so expressed in such conveyance, shall be and hereby is deemed to covenant with the then Owners of all the residential lots described herein, that he/she/they shall pay promptly when due his/her/their proportion of the costs described in the language above. The costs described above shall be a personal obligation of the person or persons who are the Owners of such lot at the time that such costs were incurred, and said obligation shall not pass to his/her/their successor in title unless expressly assumed by them.

Notwithstanding the foregoing, it is understood that the said obligation of an individual lot owner may be assumed and costs or assessments collected, and paid-over by a homeowner's association of which a lot owner is a member.

IN WITNESS WHEREOF, Declarant has caused this document to be executed as of the day and year first above written.

John S. Geis

STATE OF MINNESOTA)
) ss
COUNTY OF ~~HENNEPIN~~ Wright

The foregoing instrument was acknowledged before me this 21st day of February, 2002, by John S. Geis, single.

Lacy A. Nygaard
Notary Public, Wright County, MN

LACY ANN NYGAARD
NOTARY PUBLIC - MINNESOTA
My Commission Expires Jan. 31, 2005

THIS INSTRUMENT WAS DRAFTED BY:

Miller Law Firm, P.A. - New Hope
4900 Highway 169 North, Suite 106
New Hope, MN 55428
(763) 542-3030

2002 AND PRIOR TAXES PAID
TAXPAYER SERVICES
TRANSFER ENTERED

MAR 13 2002

HENNEPIN COUNTY MINN.
DEPUTY

11D/6

7684399

S

OFFICE OF COUNTY RECORDER
HENNEPIN COUNTY, MINNESOTA

CERTIFIED FILED AND OR
RECORDED ON

2002 MAR 26 PM 3: 25

7684399

CO. REC.

DEPUTY

EXHIBIT A

FILE NO. 20472

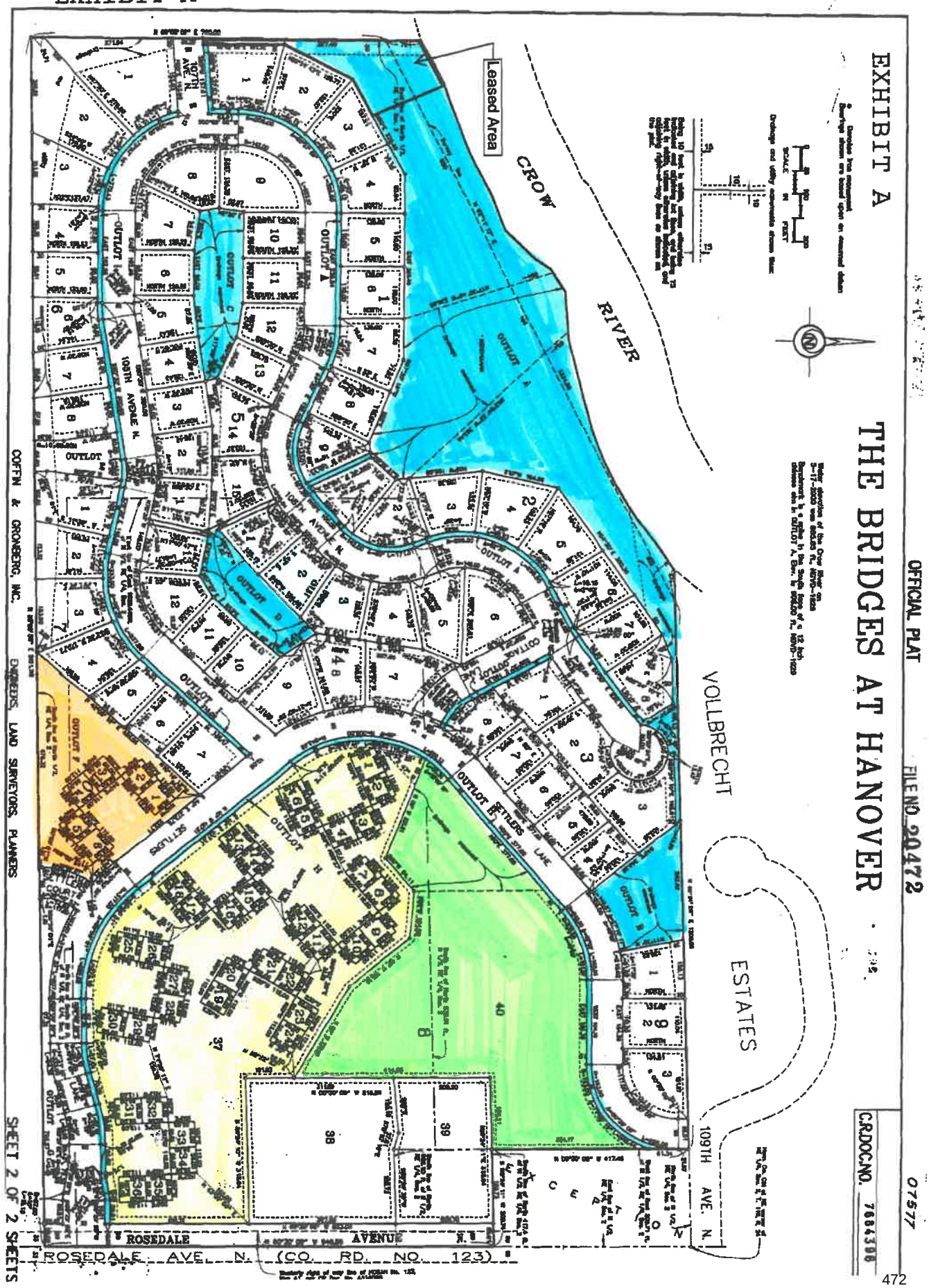

GROUND LEASE AND RECREATIONAL FACILITY COOPERATIVE AGREEMENT

THIS AGREEMENT is made and executed on this 5th day of September, 2007 by and between Bridges at Hanover ("Lessor") and the City of Hanover ("Lessee"), a municipal corporation organized and existing under the laws of the State of Minnesota.

1. DESCRIPTION AND USE OF PREMISES

Lessor, in consideration of the rent and covenants hereinafter stated, leases to Lessee and Lessee does hereby rent from Lessor approximately .25 acres of real property located in the City of Hanover, County of Hennepin, State of Minnesota, and more particularly described in Exhibit A, which is attached hereto and made a part of this Agreement. Lessee's use of the Leased Premises A will be limited to the construction, operation, maintenance, repair and replacement of playground and park equipment.

2. TERM

The term of this Agreement will be a period of 99 years, commencing on the Commencement Date, as defined below, and ending on a date ninety-nine (99) years hereafter.

The "Commencement Date" shall be a date specified in a written notice from Lessee to Lessor, which date shall be on or after the date on which each of the conditions set forth in section 6(E) has been satisfied. Said notice shall be sent in accordance with the provisions of Section 19, herein. Upon the occurrence of the Commencement Date, Lessor and Lessee shall execute an amendment to this Lease, pursuant to the provisions of Section 24, herein, which sets forth the Commencement Date.

3. RENT

Lessee will pay annual rent to Lessor in the amount of $1.00 (one dollar) payable on the Commencement Date and on every anniversary of the Commencement Date.

4. WARRANTIES OF TITLE AND QUIET POSSESSION

Lessor covenants that Lessor is seized of the Leased Premises in fee simple and has full right to make and enter into this Agreement and that Lessee shall have quiet and peaceable possession of the Leased Premises during the term of this Agreement.

5. REPRESENTATIONS BY LESSEE

Lessee represents and warrants to Lessor that Lessee has the requisite power and authority to enter into and to perform this Agreement.

6. CONSTRUCTION

A. *Plans and specifications.* Lessee has, at Lessee's sole expense, prepared, or caused to be prepared, plans and specifications for playground and site improvements, and has delivered such plans to Lessor. Lessor acknowledges that it has reviewed and approved the plans for the improvements, which are attached hereto as Exhibit B.

B. *Construction.* Lessee shall, at Lessee's sole expense, commence and shall thereafter diligently prosecute to completion the Exhibit B improvements. All such construction will be in accordance with applicable legal requirements, ordinances, zoning requirements, and will be in accordance with the plans and specifications for the project approved by Lessor.

C. *Post-Construction alterations, improvements, and changes permitted.* Lessee shall have the right to make such alterations, improvements, and changes to the

playground and site as Lessee may deem necessary, provided that prior to making any alterations, improvements or changes, Lessee shall provide written notice to Lessor.

D. *Disposition of new improvements.* The playground equipment and other park improvements installed by Lessee shall be the property of Lessee during the term of the Agreement, and Lessee shall be responsible for all obligations and duties arising out of such ownership.

E. *Conditions to Lessor's and Lessee's obligations.* This Agreement, and Lessor's and Lessee's obligations hereunder, is contingent upon the occurrence of the following:

(1) Lessee's City Council approval of this Lease.

(2) Authorization from individual homeowners and/or the Association Board, as may be required by Association Declarations and Bylaws, approving this Lease.

(3) Bids/proposals for the improvements meeting the allocated budget, and acceptance of the bid/proposal by the City Council.

7. REPAIRS AND DESTRUCTION OF IMPROVEMENTS

A. *Maintenance of improvements.* Lessee shall, throughout the term of this Agreement, at its own cost, and without expense to Lessor, keep and maintain the Leased Premises, including improvements of every kind that may be a part of the Premises, and all appurtenances to the Premises, in good condition and repair.

B. *Damage to and destruction of improvements.* In case of damage to or destruction of the playground improvements, Lessee will either elect to terminate this

Lease or alternatively, at its own expense, promptly repair and restore the improvements to a condition as good or better than that which existed prior to the damage or destruction.

In the event of an early termination by Lessee under this Section, Lessee shall have the remaining structure(s) removed from the Leased Premises and the Leased Premises restored to the condition it existed prior to the execution of this Agreement, at Lessee's sole expense.

8. REDELIVERY OF PREMISES

Lessee shall pay the rent and all other sums required to be paid by Lessee under this Agreement in the amounts, at the times, and in the manner provided in this Agreement, and shall keep and perform all the terms and conditions contained herein. At the expiration or earlier termination of this Agreement, Lessee shall peaceably and quietly quit and surrender to Lessor the Leased Premises in good order and condition subject to the other provisions of this Agreement.

9. DISPOSITION OF IMPROVEMENTS ON TERMINATION OF LEASE

On termination of this Agreement, Lessee shall provide for removal of the playground improvements.

10. USE OF PREMISES

Lessee shall maintain and operate the playground on the Leased Premises as a public park, and the playground shall be open to all members of the public. Lessee shall take no action which would discourage or inhibit public use.

11. PARKING AREAS

Lessee shall allow parking on designated portions of the 107th Avenue right-of-way. Should 107th Avenue be improved during the term of this lease, Lessee shall provide or require adequate pavement width to allow on-street parking. Lessee agrees to allow on-street parking on 108th Avenue and 106th Avenue.

12. SIGNAGE

Lessee shall provide signage directing the public to the playground. All signs will be placed in public rights-of-way.

13. INSURANCE

A. *Builder's Risk.* At all times during the term of construction of the improvements on the Leased Premises by Lessee, Lessee shall maintain or cause to be maintained Builder's Risk Insurance and extended coverages fully insuring the work as it progresses against damage or loss.

B. *Property Insurance coverage of Premises.* Lessee shall, at all times during the term of this Agreement and at Lessee's sole expense, keep the Leased Premises insured against loss or damage for full replacement value of the improvements, with loss payable to Lessee.

C. *Comprehensive General Liability Insurance.* Lessee shall maintain in effect throughout the term of this Agreement general liability insurance with limits of not less than those specified in Minn. Stat. Ch. 466.

14. TAXES AND ASSESSMENTS

A. *Payment of Taxes.* To the extent taxes are due, Lessor shall pay and discharge as they become due, promptly and before delinquency, all taxes, assessments, rates, charges, license fees, municipal liens, levies, excises, or imposts which may be levied, assessed, charged or imposed, or which may become a lien or charge on or against the Leased Premises or any part of the Leased Premises.

15. UTILITIES

Lessee shall fully and promptly pay for all water, gas, heat, light, power, telephone service, and other public or private utilities of every kind furnished to the Leased Premises, in conjunction with the park use, through the term of this Agreement, and Lessor shall have no responsibility of any kind for any such utilities.

16. EFFECT OF EMINENT DOMAIN

A. *Effect of total condemnation.* In the event the entire Leased Premises shall be appropriated or taken under the power of eminent domain by any public or quasi-public authority, including Lessee, this Agreement shall terminate and expire as of the date of such taking, and Lessees shall then be released from any liability thereafter accruing under this Agreement.

17. HAZARDOUS MATERIALS

To the best of Lessor's knowledge, no toxic or hazardous substances have been generated, treated, stored, released or disposed of, or otherwise deposited in or located upon the Leased Premises described in Section 1 of this Agreement.

18. NOTICES

All notices, demands, or other writings in this Agreement provided to be given or made or sent, or which may be given or made or sent, by either party to the other, shall be deemed to have been fully given or made or sent when made in writing and deposited in the United States mail, registered and postage prepaid, and addressed as follows:

TO LESSOR:	Bridges at Hanover Attn: Tina Goede 10862 Cottage Lane Hanover, MN 55341	Breena Natzel 10638 108th Avenue Hanover, MN 55341
TO LESSEE:	City of Hanover Attn: City Administrator 11250 5th St NE PO Box 278 Hanover, MN 55341	

The address to which any notice, demand, or other writing may be given or made or sent to any party as above provided may be changed by written notice given by such party as above provided.

19. NOTICE OF DEFAULT

Lessee shall not be deemed to be in default under this Agreement in the payment of rent or the payment of any other moneys as required or in the furnishing of any bond or insurance policy when required in this Agreement unless Lessor shall first give to Lessee 90 days written notice of the default and Lessee fails to cure the default within 90 days.

Except as to the provisions or events referred to in the preceding paragraph of this section, Lessee shall not be deemed to be in default under this Agreement unless Lessor shall first give to Lessee 90 days written notice of the default, and Lessee fails to cure the default within the 90-day period, or, if the default is of such a nature that it cannot be cured within 90 days, Lessee fails to commence to cure the default with all possible diligence.

20. PARTIES BOUND

The covenants and conditions contained in this Agreement shall, subject to the provisions as to assignment, transfer, and subletting, apply to and bind the heirs, successors, executors, administrators, and assigns of all the parties to the Agreement.

21. SECTION CAPTIONS

The captions appearing after the section number designations of this Agreement are for convenience only and are not a part of this Agreement and do not in any way limit or amplify the terms and provisions of this Agreement.

22. CONSTRUCTION OF AGREEMENT

It is agreed that this Agreement shall be governed by, construed, and enforced in accordance with the laws of the State of Minnesota. It is further agreed that both parties have participated in the drafting of this Agreement, and that the rule of construction that ambiguities in such agreements will be construed against the drafter will have no application in any interpretation or construction of this Agreement or the parties' rights and responsibilities hereunder.

23. MODIFICATION OF AGREEMENT

Any modification of this Agreement or additional obligation assumed by either party in connection with this Agreement shall be binding only if evidenced in a writing signed by each party or an authorized representative of each party.

24. ADDITIONAL DOCUMENTS

The parties agree to execute whatever papers and documents may be necessary to effectuate the terms of this Agreement, including without limitation, a memorandum of this Agreement in recordable form.

25. ENTIRE AGREEMENT

This Agreement shall constitute the entire agreement between the parties. Any prior understanding or representation of any kind preceding the date of this Agreement shall not be binding upon either party except to the extent incorporated in this Agreement.

IN WITNESS WHEREOF, the parties hereto have caused this Agreement to be executed as of the date first above written.

LESSOR:

Bridges at Hanover
Attn: Tina Goede
10862 Cottage Lane
Hanover, MN 55341

Breena Natzel
10638 108th Avenue
Hanover, MN 55341

LESSEE:

City of Hanover
11250 – 5th Street NE
P O Box 278
Hanover, MN 55341-0278

BY: _____

ITS: President

AND

BY: _____

ITS: _____

BY: Joyce Paulsen

ITS: Mayor

AND

BY: _____

ITS: City Administrator

This instrument was drafted by:

Jay T. Squires
Ratwik, Roszak & Maloney, P.A.
300 U.S. Trust Building
730 Second Avenue South
Minneapolis, MN 55402

RRM: #108904/sld

STATE OF MINNESOTA)
) ss.
COUNTY OF WRIGHT)

The foregoing instrument was acknowledged before me this 11th day of February, 2008, by Breena Natzel the President of the Bridges at Hanover Homeowners Association, with authority and on behalf of the association.

LORI F. HERWIG
NOTARY PUBLIC-MINNESOTA
My Comm. Expires Jan. 31, 2010

Notary Public

STATE OF MINNESOTA)
) ss.
COUNTY OF WRIGHT)

The foregoing instrument was acknowledged before me this 12th day of February, 2008, by Tina Goede the Vice President of the Bridges at Hanover Homeowners Association, with authority and on behalf of the association.

Melissa Lynn Baeker

Notary Public

Notary Public
Minnesota
Commission Expires January 31, 2010

STATE OF MINNESOTA)
) ss.
COUNTY OF WRIGHT)

The foregoing instrument was acknowledged before me this 8th day of February, 2008, by Joyce Paullin, Mayor and by Daniel Buchholtz, City Clerk, of the City of Hanover, a Minnesota municipal corporation, on behalf of the corporation and pursuant to the authority granted by its City Council.

Melissa Lynn Baeker

Notary Public

MELISSA LYNN BAEKER
Notary Public
Minnesota
Commission Expires January 31, 2010

EXHIBIT A

FILE NO. 20472

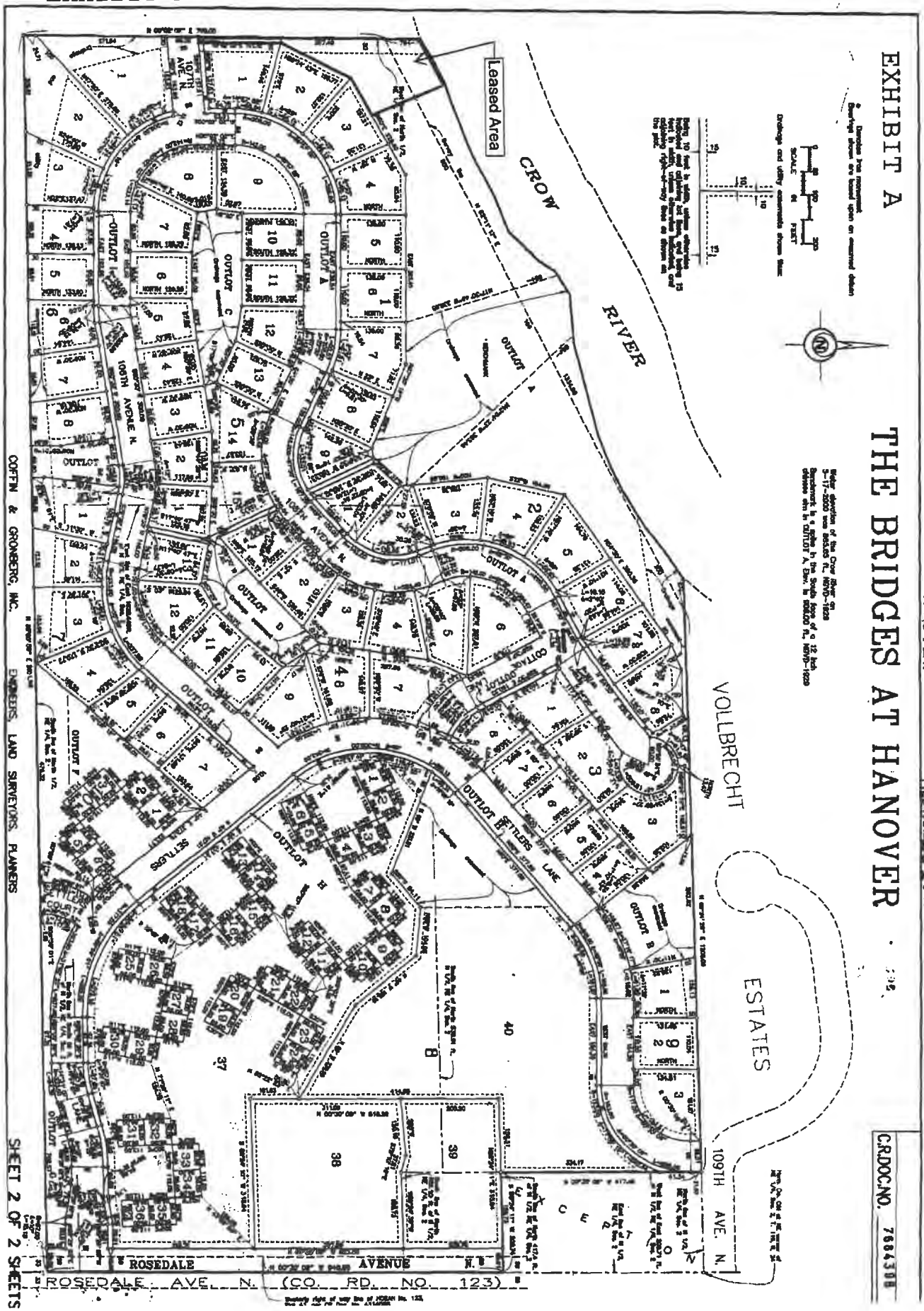

EXHIBIT B

PLAYGROUND IMPROVEMENTS

1. Purchase of Playground System

2. Supervised Installation Package (Bridges at Hanover neighborhood to provide 15 volunteers to assist with installation of playground system)

3. Landscaping, including installation of landscape berms abutting Lots 2 and 3, Block 1, The Bridges at Hanover Addition

BY-LAWS
OF
THE BRIDGES AT HANOVER ASSOCIATION

ARTICLE I.
Name and Location

The name of the corporation is The Bridges at Hanover Association, hereinafter referred to as the "Association". The principal office of the corporation shall be located at 9843-Pioneer Trail, Greenfield, Minnesota 55357, but meetings of members and directors may be held at such places within the State of Minnesota, County of Hennepin, as may be designated by the Board of Directors.

ARTICLE II.
Definitions

2.1 "**Association**" shall mean and refer to The Bridges at Hanover Association, its successors and assigns.

2.2 "**Properties**" shall mean and refer to that certain real property described in the Declaration of Covenants, Conditions and Restrictions, and such additions thereto as may hereafter be brought within the jurisdiction of the Association.

2.3 "**Lot**" shall mean and refer to any tract or parcel of land designated as a Lot shown upon any recorded plat or subdivision map of the Property, with the exception of any tracts or parcels designated as outlots.

2.4 "**Owner**" shall mean and refer to the record owner, whether one or more persons or entities, of the fee simple title to any Lot which is a part of the Properties (excluding contract sellers and including in place thereof their contract purchasers, except as to any Lot where Declarant or its lawful successors or assigns is the contract seller, in which case Declarant or its lawful successors or assigns shall be deemed the Owner of such Lot or Lots) and excluding those, except Declarant or its lawful successors and assigns, having such interest merely as security for the performance of an obligation.

2.5 "**Declarant**" shall mean and refer to John S. Geis, his heirs and assigns, if such heir or assign should acquire more than one undeveloped Lot from the Declarant for the purpose of development. Notwithstanding the foregoing, no individual or entity acquiring an undeveloped Lot from the named Developer shall become a "Developer" solely by such acquisition, but only as a result of a specific assignment of Developer and/or as a result of a specific assignment of Developer and/or Declarant rights, which assignment shall not be effective unless incorporated in the instrument of conveyance.

2.6 "**Declaration**" shall mean and refer to the Declaration of Covenants, Conditions and Restrictions applicable to the

Properties recorded in the Office of the County Recorder and/or Registrar of Titles, Hennepin County, Minnesota.

2.7 **"Member"** shall mean and refer to those persons entitled to membership as provided in the Declaration.

2.8 **"Special Common Areas"** shall mean and refer to that certain real property described in the Declaration of Covenants, Conditions and Restrictions in which Developer shall reserve, grant or charge the Association with certain exclusive and/or non-exclusive easements, rights or obligations.

ARTICLE III.
Membership and Voting Rights in the Association

3.1 **Membership.** Every person or entity who is an Owner of a fee or undivided fee simple interest in any Lot which is subject by covenants of record to assessment by the Association (excluding contract sellers and including in place thereof their contract purchasers, except as to any Lot where Declarant is the contract seller, in which case Declarant shall continue to be deemed the Owner of such Lot or Lots) shall be a Member of the Association. The foregoing is intended to exclude persons or entities, except Declarant, who hold an interest merely as a security for the performance of an obligation until such time such person acquires a fee simple interest in such Lot by foreclosure or by any proceeding in lieu thereof. Membership shall be appurtenant to and may not be separated from the ownership of any Lot which is subject to assessment by the Association. Ownership of such Lot shall be the sole qualification for membership.

3.2 **Voting Rights.** The Association shall not have nor shall it issue any capital stock, and may only have 2 classes of voting membership.

(a) **Class A.** Class A Members shall be all those Owners as defined in Section 1.1(i) of the Declaration with the exception of the Declarant. Each Class A Member shall be entitled to 1 vote for each Lot in which said Member holds the interest required for membership by Section 3.1. When more than 1 person holds such interest in any Lot, all such persons shall be Members. The vote for such Lot shall be exercised as they, among themselves, shall determine, but in no event shall more than 1 vote be cast with respect to any Lot.

(b) **Class B.** The Declarant shall be the sole Class B Member and shall be entitled to 3 votes for each Lot owned, including any Lot in which Declarant has an interest as the contract seller. Class B membership shall cease and be converted to Class A membership upon the occurrence of the first of the following events:

(i) when the total number of votes outstanding in the Class A membership equals or exceeds the total number of votes outstanding in the Class B

(ii) on December 31, 2011.

3.3 **Suspension of Voting Rights.** The right of any Member to vote shall be suspended during any period in which such Member shall be delinquent in the payment of any assessment levied by the Association. Such rights may also be suspended, after notice and hearing, for a period not to exceed 60 days for any infraction of any rules or regulations published by the Association.

ARTICLE IV.
Meetings of Members

4.1 **Annual Meetings.** The first annual meeting of the Members shall be held within 1 year from the date of incorporation of the Association, and each subsequent regular annual meeting of the Members shall be held on the first Tuesday of the same month of each year thereafter, at the hour of 7:00 o'clock p.m. If the day for the annual meeting of the Members is a legal holiday, the meeting will be held at the same hour on the first day following which is not a legal holiday.

4.2 **Special Meetings.** Special meetings of the Members may be called at any time by the President or by the Board of Directors, or upon written request of the Members who are entitled to vote 1/4 of all the votes of the Class A membership.

4.3 **Notice of Meetings.** Written notice of each meeting of I the Members shall be given by, or at the direction of, the Secretary or person authorized to call the meeting, by mailing a copy of such notice, postage prepaid, not less than 5 nor more than 30 days before such meeting to each Member entitled to vote thereat, addressed to the Member's address last appearing on the books of the Association or supplied by such Member to the Association for the purpose of notice. Such notice shall specify the place, day and hour of the meeting and, in the case of a special meeting, the purpose of the meeting.

4.4 **Quorum.** The presence at the meeting of Members entitled to cast, or of proxies entitled to cast, 1/10th of the votes of each class of membership shall constitute a quorum for any action, except as otherwise provided in the Articles of Incorporation, the Declaration or By-Laws. If, however, such quorum shall not be present or represented at any meeting, the Members entitled to vote thereat shall have power to adjourn the meeting from time to time, without notice other than announcement at the meeting, until a quorum as aforesaid shall be present and represented.

4.5 **Proxies.** At all meetings of Members, each Member may vote in person or by proxy. All proxies shall be in writing -and shall be filed with the Secretary. Every proxy shall be revocable and shall automatically cease upon conveyance by the Member of his Lot.

ARTICLE V.
Board of Directors; Selection; Term of Office

5.1 **Number.** The affairs of this Association shall be managed by a Board of 3 Directors, who need not be Members of the Association, until such time as there are 45 Class A memberships, at which time a special meeting will be held and a Board of 5 Directors shall be elected according to the procedure outlined in Section 2 of this article.

5.2 **Term of Office.** At such time as there are 45 Class A memberships, a special meeting of the Members shall be called, and said Members shall elect 1 director for a term of 1 year, 2 directors for a term of 2 years, and 2 directors for a term of 3 years; and at each annual meeting thereafter, the Members shall elect for a term of 3 years a director or directors for the director or directors whose term is expiring.

5.3 **Removal.** Any director may be removed from the board, with or without cause, by a majority vote of the Members of the Association. In the event of death, resignation or removal of a director, his or her successor shall be selected by the remaining members of the board and shall serve for the unexpired term of his predecessor.

5.4 **Compensation.** No director shall receive compensation for any service he or she may render to the Association. However, any director may be reimbursed for his or her actual expenses incurred in the performance of his or her duties.

5.5 **Action Taken Without a Meeting.** The directors shall have the right to take any action in the absence of a meeting which they could take at a meeting by obtaining the written approval of all the directors. Any action so approved shall have the same effect as though taken at a meeting of the directors.

ARTICLE VI.
Nomination and Election of Directors

6.1 **Nomination.** Nomination for election to the Board of Directors shall be made by a Nominating Committee. Nominations may also be made from the floor at the annual meeting. The Nominating Committee shall consist of a Chairman, who shall be a member of the Board of Directors, and 2 or more Members of the Association. The Nominating Committee shall be appointed by the Board of Directors prior to each annual meeting of the Members to serve from the close of such annual meeting until the close of the next annual meeting, and such appointment shall be announced

at each annual meeting. The Nominating Committee shall make any nominations for election to the Board of Directors as it shall in its discretion determine, but not less than the number of vacancies that are to be filled. Such nominations may be made from among Members or non-members.

6.2 **Election.** Election to the Board of Directors shall be by secret written ballot. At such election, the Members or their proxies may cast, in respect to each vacancy, as many votes as they are entitled to exercise under the provisions of the Declaration. The persons receiving the largest number of votes shall be elected. Cumulative voting is not permitted.

ARTICLE VII.
Meetings of Directors

7.1 **Regular Meetings.** Annual meetings of the Board of Directors shall be held following the annual meeting of the Members at the hour of 8:00 o'clock p.m. In addition, regular meetings of the Board of Directors shall be held quarterly at such place and on such date as established by a resolution of the Board of Directors at their annual meeting.

7.2 **Special Meetings.** Special meetings of the Board of Directors shall be held when called by the President of the Association, or by any 2 directors, after not less than 3 days notice to each director.

7.3 **Quorum.** A majority of the number of directors shall constitute a quorum for the transaction of business. Every act or decision done or made by a majority of the directors present at a duly held meeting at which a quorum is present shall be regarded as the act of the board.

ARTICLE VIII.
Powers and Duties of the Board of Directors

8.1 **Powers.** The Board of Directors shall have the power to:

(a) adopt and publish rules and regulations governing the Special Common Area and facilities, if any, and the personal conduct of the Members and their guests thereon, and to establish penalties for the infraction thereof;

(b) suspend the voting rights during any period in which such Member shall be in default in the payment of any assessment levied by the Association. Such rights may also be suspended, after notice and hearing, for a period not to exceed 60 days, for infraction of published rules and regulations;

(c) exercise for the Association all powers, duties and authority vested in or delegated to this Association and not reserved to the membership by other provisions of these By-Laws, the Articles of Incorporation or the Declaration;

(d) declare the office of a member of the Board of Directors to be vacant in the event such member shall be absent from 3 consecutive meetings of the Board of Directors; and

(e) employ a manager, an independent contractor or such other employees as they deem necessary, and to prescribe their duties.

8.2 **Duties.** It shall be the duty of the Board of Directors to:

(a) cause to be kept a complete record of all its acts and corporate affairs and to present a statement thereof to the Members at the annual meeting of the Members or at any special meeting when such statement is requested in writing by 1/4th of the Class A Members who are entitled to vote;

(b) supervise all officers, agents and employees of this Association, and to see that their duties are properly performed;

(c) as more fully provided in the Declaration to:

(i) fix the amount of the assessment against each Lot at least 30 days in advance of each assessment period;

(ii) send written notice of each assessment to every Owner subject thereto at least 30 days in advance of each assessment period; and

(iii) foreclose the lien against any property for which assessments are not paid within 30 days after the due date or to bring an action at law against the Owner personally obligated to pay the same;

(d) issue, or cause an appropriate officer to issue, upon demand by any person, a certificate setting forth whether or not any assessment has been paid. A reasonable charge may be made by the board for the issuance of these certificates. If a certificate states an assessment has been paid, such certificate shall be conclusive evidence of such payment;

(e) procure and maintain adequate liability and hazard insurance on property owned by the Association;

(f) cause all officers or employees having fiscal responsibilities to be bonded as it may deem appropriate;

(g) cause the performance of maintenance and enforcement as provided in the Declaration of Covenants, Conditions and Restrictions; and

(h) act as an Architectural Control Committee or appoint an Architectural Control Committee pursuant to the provisions of Article VI of the Declaration of Covenants, Conditions and Restrictions.

ARTICLE IX.
Officers and Their Duties

9.1 **Enumeration of Offices.** The officers of this Association shall be a President and Vice President, who shall at all times be members of the Board of Directors, a Secretary and a Treasurer, and such other officers as the board may from time to time by resolution create.

9.2 **Election of Officers.** The election of officers shall take place at the first meeting of the Board of Directors occurring subsequent to each annual meeting of the Members.

9.3 **Term.** The officers of this Association shall be elected annually by the board and each shall hold office for 1 year unless he or she shall sooner resign, or shall be removed, or otherwise disqualified to serve.

9.4 **Special Appointments.** The board may elect such other officers as the affairs of the Association may require, each of whom shall hold office for such period, have such authority, and perform such duties as the board may from time to time determine.

9.5 **Resignation and Removal.** Any officer may be removed from office, with or without cause, by the board. Any officer may resign at any time, giving written notice to the board, the President or the Secretary. Such resignation shall take effect on the date of receipt of such notice or any later time specified therein, and unless otherwise specified therein, the acceptance of such resignation shall not be necessary to make it effective.

9.6 **Vacancies.** A vacancy in any office may be filled by appointment by the board. The officer appointed to such vacancy shall serve for the remainder of the term of the officer he or she replaces.

9.7 **Multiple Offices.** The offices of Secretary and Treasurer may be held by the same person. No person shall simultaneously hold more than 1 of any of the other offices, except in the case of special offices created pursuant to Section

9.8 **Duties.** The duties of the officers are as follows:

(a) President. The President shall be the Chief Executive Officer and shall preside at all meetings of the Board of Directors, shall see that orders and resolutions of the board are carried out, shall sign all leases, mortgages, deeds and other written instruments, and may co-sign or sign all checks and promissory notes.

(b) Vice President. The Vice President shall act in the place and stead of the President in the event of his or her absence, inability or refusal to act, and shall exercise and discharge such other duties as may be required of him or her by the board.

(c) Secretary. The Secretary shall record the votes and keep the minutes of all meetings and proceedings of the board and of the Members, serve notice of meetings of the board and of the Members, keep appropriate current records showing the Members of the Association together with their addresses, and shall perform such other duties as required by the board.

(d) Treasurer. The Treasurer shall be the Chief Financial Officer and shall receive and deposit in appropriate bank accounts all monies of the Association, and shall disburse such funds as directed by resolution of the Board of Directors, shall sign all checks and promissory notes of the Association, keep proper books of account, cause an annual audit of the Association books to be made by a public accountant at the completion of each fiscal year, and shall prepare an annual budget and statement of income and expenditures to be presented to the membership at its regular annual meeting, and shall deliver a copy of each to the Members.

ARTICLE X.
Committees

The Board of Directors shall appoint an Architectural Control Committee, as provided in the Declaration, and a Nominating Committee, as provided in these By-Laws. In addition, the Board of Directors shall appoint such other committees as deemed appropriate in carrying out its purpose.

ARTICLE XI.
Books and Records

The books, records and papers of the Association shall at all times, during reasonable business hours, be subject to inspection by any Member. The Declaration, the Articles of Incorporation and the By-Laws of the Association shall be available for inspect-ion by any Member at the principal office of the Association, where copies may be purchased at a reasonable cost.

ARTICLE XII.
Maintenance Assessments

As more fully provided in the Declaration, each Member is obligated to pay to the Association annual and special assessments which are secured by a continuing lien upon the Property against which the assessment is made. If the assessment is not paid within 30 days after the due date, the assessment shall bear interest from the date of delinquency at the rate of 8% per annum, and the Association may bring an action at law against the Owner personally obligated to pay the same or foreclose the lien against the Property, and interest, costs and reasonable attorney's fees of any such action shall be added to the amount of such assessment. No Owner may waive or otherwise escape liability for the assessments provided for herein by abandonment of his or her Lot.

ARTICLE XIII.
Corporate Seal

The Association shall have no corporate seal.

ARTICLE XIV.
Amendments

14.1 These By-Laws may be amended, at a regular or special meeting of the Members, by a vote of a majority of a quorum of Members present in person or by proxy.

14.2 In case of any conflict between the Articles of Incorporation and these By-Laws, the Articles shall control; and in the case of any conflict between the Declaration and these By-Laws, the Declaration shall control; and in the case of any conflict between the Articles of Incorporation and the Declaration, the Declaration shall control.

ARTICLE XV.
Additional Associations

Any group of Owners who are Members of this Association shall have the right to establish a homeowners association or corporation, provided that the establishment of such an association or corporation shall in no way be derogatory of any rights or obligations established by and through the Declaration heretofore and hereafter recorded, and provided further:

(a) the property owned by said Owners is contiguous or has a specific common interest or purpose and encompasses at least 5 Lots or living units;

(b) the association or corporation includes within its boundaries all of the Lots or living units owned by its members.

The Owners of the lots, living units or sites included within the boundaries of said association or corporation shall continue to be Members of this Association and the establishment of such an association or corporation shall not relieve, remove or reduce in any manner whatsoever the obligations of its members to this Association, and any such association or corporation shall be subject to and subordinate to this Association in all respects. Such an association or corporation shall not have the power or right to exclude any of the Members of this Association who are not also members of such association or corporation from, or in any manner interfere with, their possession or enjoyment of the Special Common Areas. The establishment of any said association shall not in any manner contravene the rights of the Members as expressed in the Declaration.

ARTICLE XVI.
Non-Discrimination

The Association shall comply with all requirements imposed by any applicable statute relating to the properties or executive order prohibiting discrimination on the basis of race, color, sex, religion or national origin, and concerning equal opportunity and employment or use, sale, lease or other disposition of properties, or any housing or other facilities now or hereafter located thereon.

ARTICLE XVII.
Additional Developer Right

The Developer shall have the right to prohibit, stop or remedy any action to be, being or taken by the Association, as the case may be, if such action is or may be in violation of, or has or may have a detrimental effect on Developer, because of Developer's covenants and agreement under Development and Project Agreements with the City of Hanover or Conditional Use Permits issued by the City of Hanover, or as the same may be amended or modified by the City of Hanover. The jurisdiction of the Association shall be subject to any and all agreements between the Developer and the City of Hanover covering the property subject to the Declaration or any part thereof, whether such agreement or agreements are entered into before or after the date of filing Articles of Incorporation for the Association. It is provided, however, that the Developer shall exercise the rights provided for above only if the Association shall fail to remedy an action which is or may be a violation of such agreements after

notice from the Developer to do so. The Association shall comply with the terms of the above-described agreements and shall have the primary obligation therefore as to the Special Common Areas. These rights shall be exercised by the Developer to the extent consistent with the said agreements and as long as Developer holds Class A or Class B membership in the Association.

ARTICLE XVIII.
Miscellaneous

The fiscal year of the Association shall begin the 1st day of June and end on the 31 day of May of every year, except that the first fiscal year shall begin on the date of incorporation.

IN WITNESS WHEREOF, we, being all of the directors of the Bridges at Hanover Association, have set our hands this 21 day of February, 2002.

John S. Geis

Steven P. Geis

Charlotte A. Geis

THE BRIDGES AT HANOVER ASSOCIATION

FIRST AMENDMENT TO BYLAWS

THIS FIRST AMENDMENT TO BYLAWS is made in the County of Hennepin, State of Minnesota, on this ____ day of _____, 2013, by The Bridges at Hanover Association, a Minnesota non-profit corporation (the "Association").

WHEREAS, the Bylaws of The Bridges at Hanover Association were executed by all of the Directors serving on the Board of Directors on the 21st day of February, 2002 (the "Bylaws"); and

WHEREAS, on the ____ day of _____, 2013, at a meeting of the Board of Directors in which a quorum was established, a majority of the Directors present voted in favor of amending the Bylaws as indicated herein.

NOW THEREFORE, the Association, by and through its Members, hereby declares that the Bylaws shall be amended as follows:

1. Article 1 is hereby amended as follows:

   In line three, the wording "9843-Pioneer Trail, Greenfield, Minnesota 55357" shall be deleted and replaced with the following: "10600 108th Ave. N., Hanover, MN 55341". At the end of the paragraph, a sentence shall be added as follows: The principal office address of the corporation is subject to change from time to time without amending the Bylaws hereafter.

2. All references to "Class B Membership" shall be omitted; it being understood that there are no longer any valid Class B Members.

3. Section 4.1 is hereby deleted and replaced in its entirety to read as follows:

   Annual Meetings. The annual meeting of the Members shall be held on the last Tuesday in April, or such other date and time as the Board of Directors may determine by giving Sixty (60) days-notice, for the purposes of the election of Directors to serve on the Board of Directors for the ensuing year and to transact such other business as may properly come before the Members.

4. Section 5.4 is hereby deleted and replaced in its entirety to read as follows:

   Compensation. No Director shall receive compensation for any services he or she may render to the Association, but the Board of Directors may, from time to time,

allow for a reduction in the annual assessments for the Directors serving on the Board in an amount equal to twenty-five percent (25%) of the amount due and owing. The foregoing reduction shall only apply to the annual assessments and shall not be applicable to any special assessments. Notwithstanding the foregoing, Directors may also be reimbursed for his or her actual expenses incurred in the performance of his or her duties on behalf of the Board.

5. Section 7.1 is hereby deleted and replaced in its entirety to read as follows:

Regular Meetings. The annual meeting of the Board of Directors shall be held immediately after the annual meeting of the Members. In addition, regular meetings of the Board of Directors shall be held at least quarterly during the year at such place and on such date as established by a resolution of the Board of Directors.

6. **Article X. Committees** is hereby deleted and replaced in its entirety to read as follows:

The Board of Directors may nominate and appoint an Architectural Control Committee, as provided in the Declaration and a Nominating Committee for purposes of seeking candidates for future Director and Officer positions. In addition, the Board of Directors may appoint such other committees as deemed appropriate from time to time to carry out the business purposes of the Association.

7. **Article XI. Books and Records** is hereby deleted and replaced in its entirety to read as follows:

The books, records and papers of the Association shall, during reasonable business hours, be subject to inspection by any Member upon providing to such officer who has the duty of holding such books, records and/or papers, a forty-eight (48) hour notice prior to such inspection.

8. **Article XIX Conflict of Interest** is hereby added to read as follows:

Any Director, Officer or Member who has an interest in a contract or other transaction presented to the Board of Directors or committee thereof for authorization, approval or ratification shall make a prompt and full disclosure of his or her interest to the Board of Directors or committee prior to the Board acting on such contract or transaction. Such disclosure shall include any relevant or material facts known to such person about the contract or transaction, which might reasonably be construed to be adverse to the corporation's interest.

The body which such disclosure is made shall thereupon determine, by a vote of seventy-five percent (75%) of the votes entitled to vote, whether the disclosure shows that a conflict of interest exists or can reasonably be construed to exist. If a conflict is deemed to exist, such person shall not vote on, nor use his or her personal influence on, nor participate (other than to present factual information or to respond to questions) in the discussions and deliberations in respect to such contract or transaction. Such person may be counted in determining whether a quorum is present, but may not be counted when the Board of Directors or committee of the Board takes action on the contract or transaction. The minutes of the meeting shall reflect the disclosure made, the votes thereon and the abstinence from participation and voting.

9. **Definition of Terms.** Except as otherwise specifically provided in this Amendment, any capitalized words or terms shall have the meaning ascribed to them in the Bylaws.

10. **Relationship to Prior Documents.** Except as specifically herein amended, the Bylaws shall remain unchanged and in full force and effect.

The foregoing Amendments to the Bylaws were approved at a regular meeting of Members held on the _____ day of _____, 2013.

THE BRIDGES AT HANOVER

_____

By: _____

Its: President

Attest:

_____

Secretary