AGENDA
HANOVER ECONOMIC DEVELOPMENT AUTHORITY
JULY 12, 2018

TODD BARTELS - CHAIR
JESSICA JOHNSON – TREASURER
BRIAN DISMANG
TED ZRUST
TONY ROSS

KEN WARPULA – VICE CHAIR
MARYANN HALLSTEIN
HEIDI PEPER, EDA CONSULTANT

1. **Call to Order: 8:00 a.m.**

2. **Oath of Office – Tony Ross**

3. **Approval of:**
   a. **Agenda**
   b. **Minutes of May 10, 2018 Regular Meeting**
   c. **Accounts Payable and Financial Reports**

4. **Citizen's Forum**

5. **Unfinished Business**

6. **New Business**
   a. **Matching Grant Program Request – Hanover Dental**

7. **EDA Board and Staff Reports**
   a. **EDA Board Reports**
   b. **Staff Reports**

8. **Adjournment**

CITY OF HANOVER
ECONOMIC DEVELOPMENT AUTHORITY MEETING
MAY 10, 2018 – DRAFT MINUTES

Call to Order
Chair Bartels called the regular EDA meeting of May 10, 2018 to order at 8:00 a.m. Present were Members Todd Bartels, Jessica Johnson, Brian Dismang, Ted Zrust, Ken Warpula, and MaryAnn Hallstein. Also present was City Administrator Brian Hagen.

Approval of Agenda
MOTION by Warpula to approve the agenda as presented, seconded by Johnson. **Motion carried unanimously.**

Approval of Minutes from April 12, 2018 Regular Meeting
MOTION by Dismang to approve minutes as presented, seconded by Johnson. **Motion carried unanimously.**

Approval of Accounts Payable and Financial Reports
Johnson noted routine payments and that two outstanding loans are current.
MOTION by Johnson to approve the Accounts Payable and Financial Reports as presented, seconded by Dismang. **Motion carried unanimously.**

Citizen's Forum

Unfinished Business
Downtown Sign Replacement
Hagen presented colored renderings prepared by Leroy Signs. Consensus was to use a white background, remove the blue portion of the Hanover Logo, and to add Est. 1891 under Hanover. Hagen would present the final option and approval of the replacement to City Council.

New Business

Reports
Hagen informed that the downtown parking lot site plan will be discussed by Planning Commission at their May meeting, with June 5th City Council consideration. Discussion on upcoming agendas and lack of items to review until budget. Consensus of group was to cancel June and July meetings unless a business incentive program application is submitted.

Johnson inquired as to whether the group would want to address the annual Hanover Harvest Festival donation. Hagen noted that historically the EDA has donated $1,500 towards the event.
MOTION by Zrust to donate $1,500 to the Hanover Harvest Festival, seconded by Dismang. **Motion carried unanimously.**

Adjournment
MOTION by Warpula to adjourn at 8:25 a.m., seconded by Dismang. **Motion carried unanimously.**

ATTEST:

_____
Brian Hagen, City Administrator

HANOVER
Cash Balances
June 2018

Fund	Begin Month	GL Debits Month	GL Credits Month	Balance
100 GENERAL FUND	$281,012.67	$361,352.00	$171,124.23	$471,240.44
107 FIRE DEPT DONATIONS FUND	$21,019.28	$380.00	$0.00	$21,399.28
201 EDA SPECIAL REVENUE FUND	$59,593.07	$19,410.25	$3,588.00	$75,415.32
205 EDA BUSINESS INCENTIVE FUND	$249,068.36	$817.83	$0.00	$249,886.19
311 2008A GO CIP REFUNDING BOND	$45,006.28	$20,628.00	$0.00	$65,634.28
312 2009A GO IMP REFUNDING BOND	$5,242.50	$3,466.19	$0.00	$8,708.69
313 2010 GO EQUIPMENT CERTIFICATES	$0.00	$0.00	$0.00	$0.00
314 2011A GO IMP CROSSOVER REF BD	$428,550.03	$90,148.88	$0.00	$518,698.91
315 2016A GO CIP BOND	$5,422.25	$52,618.00	$0.00	$58,040.25
401 GENERAL CAPITAL PROJECTS	$1,343,879.87	$5,042.76	$0.00	$1,348,922.63
402 PARKS CAPITAL PROJECTS	$112,902.02	$12,500.00	$847.13	$124,554.89
403 FIRE DEPT CAPITAL FUND	$241,211.97	$30,000.00	$0.00	$271,211.97
404 HISTORICAL CAPITAL PROJ FUND	$0.00	$0.00	$0.00	$0.00
405 PARK DEDICATION FEE	$2,740.00	$0.00	$0.00	$2,740.00
407 TIF REDEV DIST #1	$7,068.92	$6,180.67	$0.00	$13,249.59
409 MAHLER PIT - 15TH ST IMP FUND	$10,230.12	$0.00	$0.00	$10,230.12
411 FACILITIES CAPITAL PROJ FUND	-$437,975.51	$0.00	$0.00	-$437,975.51
417 EQUIPMENT CAPITAL FUND	$114,335.90	$7,500.00	$0.00	$121,835.90
418 STREET CAPITAL PROJ FUND	$690,714.76	$76,440.00	$1,710.50	$765,444.26
601 WATER ENTERPRISE FUND	$867,874.49	$4,810.77	$11,821.82	$860,863.44
602 SEWER ENTERPRISE FUND	$414,601.93	$25,354.33	$25,927.50	$414,028.76
603 STORM WATER ENTERPRISE FUND	$121,651.68	$4,281.54	$887.38	$125,045.84
611 WATER CAPITAL IMP FUND	$137,857.92	$29,398.22	$0.00	$167,256.14
612 SEWER CAPITAL IMP FUND	$1,850,168.31	$91,245.07	$0.00	$1,941,413.38
613 STORM WATER CAPITAL IMP FUND	$552,929.07	$50,808.00	$0.00	$603,737.07
701 RIVER ROAD CEMETERY	$35,981.74	$0.00	$0.00	$35,981.74
804 SCHENDELS FIELD ESC FUND	$0.00	$0.00	$0.00	$0.00
809 BRIDGES AT HANOVER ESC FUND	$0.00	$0.00	$0.00	$0.00
811 EROSION CONTROL ESCROW FUND	$40,000.00	$0.00	$2,000.00	$38,000.00
815 LANDSCAPE ESCROW FUND	$36,000.00	$0.00	$2,000.00	$34,000.00
817 INFRASTRUCTURE ESCROW FUND	$22,000.00	$0.00	$1,000.00	$21,000.00
818 MISC ESCROWS FUND	$13,560.86	$1,512.75	$3,253.00	$11,820.61
820 BRIDGES TOWNHOMES ESC FUND	$3,606.78	$0.00	$0.00	$3,606.78
821 QUAIL PASS 2ND ADD ESCROW FD	$0.00	$0.00	$0.00	$0.00
823 CROW RVR HTS WEST 3RD / BACKES	$148,318.92	$0.00	$148,118.63	$200.29
824 CROW RVR HTS WEST 3RD PH2 EAW	$8,954.13	$0.00	$2,424.00	$6,530.13
825 CROW RVR HTS FUT WEST PLAT/PUD	$40,125.25	$0.00	$4,103.19	$36,022.06
826 CROW RVR HTS 4TH ADD FINL PLAT	$3,000.00	$0.00	$75.75	$2,924.25
900 INTEREST	$15,303.48	$0.00	$0.00	$15,303.48

HANOVER

Cash Balances

June 2018

Fund	Begin Month	GL Debits Month	GL Credits Month	Balance
	$7,491,957.05	$893,895.26	$378,881.13	$8,006,971.18

HANOVER

Revenue Budget by Source - EDA

Source Alt Code	Account Descr	May 2018 Amt	2018 YTD Amt	2018 YTD Budget	2018 YTD Variance	%YTD Budget
Fund 201 EDA SPECIAL REVENUE FUND						
TAXES	R 201-31000 Property Taxes - General	$0.00	$0.00	$49,000.00	$49,000.00	0.00%
TAXES	R 201-31010 Tax Abatement	$0.00	$0.00	$0.00	$0.00	0.00%
Source Alt Code TAXES		$0.00	$0.00	$49,000.00	$49,000.00	0.00%
MISC	R 201-36200 Miscellaneous Revenues	$0.00	$500.00	$0.00	-$500.00	0.00%
MISC	R 201-36210 Interest Earnings	$0.00	$209.45	$500.00	$290.55	41.89%
MISC	R 201-36215 Investment Income/Loss	$0.00	-$357.30	$500.00	$857.30	-71.46%
Source Alt Code MISC		$0.00	$352.15	$1,000.00	$647.85	35.22%
INTGOVT	R 201-33410 MV Credit	$0.00	$0.00	$0.00	$0.00	0.00%
Source Alt Code INTGOVT		$0.00	$0.00	$0.00	$0.00	0.00%
Fund 201 EDA SPECIAL REVENUE FUND		$0.00	$352.15	$50,000.00	$49,647.85	0.70%
Fund 205 EDA BUSINESS INCENTIVE FUND						
MISC	R 205-36200 Miscellaneous Revenues	$0.00	$0.00	$0.00	$0.00	0.00%
MISC	R 205-36210 Interest Earnings	$20.34	$914.14	$3,000.00	$2,085.86	30.47%
MISC	R 205-36215 Investment Income/Loss	$0.00	-$1,372.10	$0.00	$1,372.10	0.00%
MISC	R 205-36230 Contributions and Donations	$0.00	$0.00	$0.00	$0.00	0.00%
MISC	R 205-39203 Transfer from Other Fund	$0.00	$0.00	$15,000.00	$15,000.00	0.00%
Source Alt Code MISC		$20.34	-$457.96	$18,000.00	$18,457.96	-2.54%
INTGOVT	R 205-33400 State Grants and Aids	$0.00	$0.00	$0.00	$0.00	0.00%
Source Alt Code INTGOVT		$0.00	$0.00	$0.00	$0.00	0.00%
Fund 205 EDA BUSINESS INCENTIVE FUND		$20.34	-$457.96	$18,000.00	$18,457.96	-2.54%
		$20.34	-$105.81	$68,000.00	$68,105.81	-0.16%

HANOVER

Expenditure Budget Report - EDA

Dept Abbrev	Account Descr	May 2018 Amt	2018 YTD Amt	2018 YTD Budget	2018 YTD Balance	%YTD Budget
Fund 201 EDA SPECIAL REVENUE FUND						
Dept 41330 Boards and Commissions						
BRDCOM	E 201-41330-111 Committee Wages/Meetin	$0.00	$0.00	$3,000.00	$3,000.00	0.00%
BRDCOM	E 201-41330-306 Dues & Subscriptions	$0.00	$310.00	$1,000.00	$690.00	31.00%
BRDCOM	E 201-41330-310 Other Professional Service	$123.42	$859.42	$25,000.00	$24,140.58	3.44%
BRDCOM	E 201-41330-437 Other Miscellaneous	$3,481.59	$4,214.19	$5,000.00	$785.81	84.28%
Dept 41330 Boards and Commissions		$3,605.01	$5,383.61	$34,000.00	$28,616.39	15.83%
Dept 41570 Purchasing						
PURCHAS	E 201-41570-210 Operating Supplies (GENE	$0.00	$0.00	$1,000.00	$1,000.00	0.00%
Dept 41570 Purchasing		$0.00	$0.00	$1,000.00	$1,000.00	0.00%
Dept 49360 Transfers Out						
TRNSFER	E 201-49360-700 Transfers (GENERAL)	$0.00	$0.00	$15,000.00	$15,000.00	0.00%
Dept 49360 Transfers Out		$0.00	$0.00	$15,000.00	$15,000.00	0.00%
Fund 201 EDA SPECIAL REVENUE FUND		$3,605.01	$5,383.61	$50,000.00	$44,616.39	10.77%

HANOVER

Expenditure Budget Report - EDA

Dept Abbrev	Account Descr	May 2018 Amt	2018 YTD Amt	2018 YTD Budget	2018 YTD Balance	%YTD Budget
Fund 205 EDA BUSINESS INCENTIVE FUND						
Dept 46500 Economic Develop mt (GENERAL)						
ECODEVE	E 205-46500-810 Refunds & Reimbursemen	$0.00	$0.00	$0.00	$0.00	0.00%
Dept 46500 Economic Develop mt (GENERAL)		$0.00	$0.00	$0.00	$0.00	0.00%
Dept 49300 Other Finanacing Uses						
OTHFINU	E 205-49300-317 EDA BIF: Rent Reimburse	$0.00	$0.00	$0.00	$0.00	0.00%
OTHFINU	E 205-49300-318 EDA BIF: Matching Grant	$0.00	$0.00	$0.00	$0.00	0.00%
OTHFINU	E 205-49300-319 EDA BIF: EDA Loan	$0.00	$0.00	$0.00	$0.00	0.00%
Dept 49300 Other Finanacing Uses		$0.00	$0.00	$0.00	$0.00	0.00%
Fund 205 EDA BUSINESS INCENTIVE FUND		$0.00	$0.00	$0.00	$0.00	0.00%

HANOVER

Expenditure Budget Report - EDA

Dept Abbrev	Account Descr	May 2018 Amt	2018 YTD Amt	2018 YTD Budget	2018 YTD Balance	%YTD Budget
		$3,605.01	$5,383.61	$50,000.00	$44,616.39	10.77%

HANOVER

Revenue Budget by Source - EDA

Source Alt Code	Account Descr	June 2018 Amt	2018 YTD Amt	2018 YTD Budget	2018 YTD Variance	%YTD Budget
Fund 201 EDA SPECIAL REVENUE FUND						
TAXES	R 201-31000 Property Taxes - General	$19,410.25	$19,410.25	$49,000.00	$29,589.75	39.61%
TAXES	R 201-31010 Tax Abatement	$0.00	$0.00	$0.00	$0.00	0.00%
Source Alt Code TAXES		$19,410.25	$19,410.25	$49,000.00	$29,589.75	39.61%
MISC	R 201-36200 Miscellaneous Revenues	$0.00	$500.00	$0.00	-$500.00	0.00%
MISC	R 201-36210 Interest Earnings	$0.00	$209.45	$500.00	$290.55	41.89%
MISC	R 201-36215 Investment Income/Loss	$0.00	-$357.30	$500.00	$857.30	-71.46%
Source Alt Code MISC		$0.00	$352.15	$1,000.00	$647.85	35.22%
INTGOVT	R 201-33410 MV Credit	$0.00	$0.00	$0.00	$0.00	0.00%
Source Alt Code INTGOVT		$0.00	$0.00	$0.00	$0.00	0.00%
Fund 201 EDA SPECIAL REVENUE FUND		$19,410.25	$19,762.40	$50,000.00	$30,237.60	39.52%
Fund 205 EDA BUSINESS INCENTIVE FUND						
MISC	R 205-36200 Miscellaneous Revenues	$0.00	$0.00	$0.00	$0.00	0.00%
MISC	R 205-36210 Interest Earnings	$22.65	$936.79	$3,000.00	$2,063.21	31.23%
MISC	R 205-36215 Investment Income/Loss	$0.00	-$1,372.10	$0.00	$1,372.10	0.00%
MISC	R 205-36230 Contributions and Donations	$0.00	$0.00	$0.00	$0.00	0.00%
MISC	R 205-39203 Transfer from Other Fund	$0.00	$0.00	$15,000.00	$15,000.00	0.00%
Source Alt Code MISC		$22.65	-$435.31	$18,000.00	$18,435.31	-2.42%
INTGOVT	R 205-33400 State Grants and Aids	$0.00	$0.00	$0.00	$0.00	0.00%
Source Alt Code INTGOVT		$0.00	$0.00	$0.00	$0.00	0.00%
Fund 205 EDA BUSINESS INCENTIVE FUND		$22.65	-$435.31	$18,000.00	$18,435.31	-2.42%
		$19,432.90	$19,327.09	$68,000.00	$48,672.91	28.42%

HANOVER

Expenditure Budget Report - EDA

Dept Abbrev	Account Descr	June 2018 Amt	2018 YTD Amt	2018 YTD Budget	2018 YTD Balance	%YTD Budget
Fund 201 EDA SPECIAL REVENUE FUND						
Dept 41330 Boards and Commissions						
BRDCOM	E 201-41330-111 Committee Wages/Meetin	$0.00	$0.00	$3,000.00	$3,000.00	0.00%
BRDCOM	E 201-41330-306 Dues & Subscriptions	$0.00	$310.00	$1,000.00	$690.00	31.00%
BRDCOM	E 201-41330-310 Other Professional Service	$3,588.00	$4,447.42	$25,000.00	$20,552.58	17.79%
BRDCOM	E 201-41330-437 Other Miscellaneous	$0.00	$4,214.19	$5,000.00	$785.81	84.28%
Dept 41330 Boards and Commissions		$3,588.00	$8,971.61	$34,000.00	$25,028.39	26.39%
Dept 41570 Purchasing						
PURCHAS	E 201-41570-210 Operating Supplies (GENE	$0.00	$0.00	$1,000.00	$1,000.00	0.00%
Dept 41570 Purchasing		$0.00	$0.00	$1,000.00	$1,000.00	0.00%
Dept 49360 Transfers Out						
TRNSFER	E 201-49360-700 Transfers (GENERAL)	$0.00	$0.00	$15,000.00	$15,000.00	0.00%
Dept 49360 Transfers Out		$0.00	$0.00	$15,000.00	$15,000.00	0.00%
Fund 201 EDA SPECIAL REVENUE FUND		$3,588.00	$8,971.61	$50,000.00	$41,028.39	17.94%

HANOVER

Transaction Activity - EDA

Period Name	Refer	Check Nbr	Tran Nbr	Tran Name	Search Name	Invoice	Amount	Comments	Check/Receipt Date	Fund
Act Year 2018										
PL Type G General Ledger										
Account Descr G 201-10100 Cash										
January	377		30	Journal Entry			-$7,405.56	To Reverse 2017 YE JE #		201
March	384		30	Journal Entry			-$147.85	Allocate 1st Quarter 2018		201
Account Descr G 201-10100 Cash							-$7,553.41			
Account Descr G 201-10500 Taxes Receivable-Current										
January	379		30	Journal Entry			-$205.38	To Reverse 2017 YE JE #		201
Account Descr G 201-10500 Taxes Receivable-Current							-$205.38			
Account Descr G 201-20200 Accounts Payable										
January	377		30	Journal Entry			$7,405.56	To Reverse 2017 YE JE #		201
Account Descr G 201-20200 Accounts Payable							$7,405.56			
Account Descr G 205-10100 Cash										
January	377		30	Journal Entry			-$766.25	To Reverse 2017 YE JE #		205
March	384		30	Journal Entry			-$567.78	Allocate 1st Quarter 2018		205
Account Descr G 205-10100 Cash							-$1,334.03			
Account Descr G 205-12400 EDA Loan Receivable										
January	9487	084342	10	Cash Receipt	CP PROPERTIES GROUP LLC		$180.65	EDA Loan Principal Payme	01/26/18	205
January	9459	084245	10	Cash Receipt	PLUG TECHNOLOGIES, INC		$428.77	EDA Loan Principal Payme	01/04/18	205
February	9496	084381	10	Cash Receipt	PLUG TECHNOLOGIES, INC		$427.51	EDA Loan Principal Payme	02/06/18	205
March	9519	084450	10	Cash Receipt	CP PROPERTIES GROUP LLC		$180.73	EDA Loan Principal Payme	02/27/18	205
March	9563	084546	10	Cash Receipt	CP PROPERTIES GROUP LLC		$181.46	EDA Loan Principal Payme	03/27/18	205
March	9543	084492	10	Cash Receipt	MARIS EHLERS PHOTOGRAPY		$345.70	EDA Loan Principal Payme	03/12/18	205
March	9530	084474	10	Cash Receipt	PLUG TECHNOLOGIES, INC		$431.46	EDA Loan Principal Payme	03/06/18	205
April	9567	084585	10	Cash Receipt	PLUG TECHNOLOGIES, INC		$431.53	EDA Loan Principal Payme	04/04/18	205
May	9590	084721	10	Cash Receipt	CP PROPERTIES GROUP LLC		$181.56	EDA Loan Principal Payme	04/26/18	205
May	9605	084778	10	Cash Receipt	PLUG TECHNOLOGIES, INC		$431.63	EDA Loan Principal Payme	05/04/18	205
June	9692	084872	10	Cash Receipt	CP PROPERTIES GROUP LLC		$181.86	EDA Loan Principal Payme	05/29/18	205
June	9726	085031	10	Cash Receipt	CP PROPERTIES GROUP LLC		$182.09	EDA Loan Principal Payme	06/26/18	205
June	9700	849220	10	Cash Receipt	PLUG TECHNOLOGIES, INC		$431.23	EDA Loan Principal Payme	06/05/18	205
Account Descr G 205-12400 EDA Loan Receivable							$4,016.18			
Account Descr G 205-20200 Accounts Payable										

Period Name	Refer	Check Nbr	Tran Nbr	Tran Name	Search Name	Invoice	Amount	Comments	Check/Receipt Date	Fund
January	377		30	Journal Entry			$766.25	To Reverse 2017 YE JE #		205
Account Descr G 205-20200 Accounts Payable							$766.25			
PL Type G General Ledger							$3,095.17			
PL Type *R Revenue										
Account Descr R 201-31000 Property Taxes - General										
January	379		30	Journal Entry			$104.41	To Reverse 2017 YE JE #		201
January	379		30	Journal Entry			$100.97	To Reverse 2017 YE JE #		201
January	123118		10	Cash Receipt	HENNEPIN COUNTY TREASURER		$100.97	HC Tax Settlement - Janu		201
January	123119		10	Cash Receipt	WRIGHT COUNTY AUDITOR-TREAS		$104.41	WC Tax Settlement - Janu		201
June	53119		10	Cash Receipt	WRIGHT COUNTY AUDITOR-TREAS		$19,410.25	WC Tax Settlement - June	06/21/18	201
Account Descr R 201-31000 Property Taxes - General							$19,821.01			
Account Descr R 201-36200 Miscellaneous Revenues										
March	9531	124076	10	Cash Receipt	MELCHERT, HUBERT, SJODIN, PLLP		$500.00	Cummings Lot Adjustment	03/06/18	201
Account Descr R 201-36200 Miscellaneous Revenues							$500.00			
Account Descr R 201-36210 Interest Earnings										
March	384		30	Journal Entry			-$209.45	Allocate 1st Quarter 2018		201
Account Descr R 201-36210 Interest Earnings							-$209.45			
Account Descr R 201-36215 Investment Income/Loss										
March	384		30	Journal Entry			$357.30	Allocate 1st Quarter 2018		201
Account Descr R 201-36215 Investment Income/Loss							$357.30			
Account Descr R 205-36210 Interest Earnings										
January	9487	084342	10	Cash Receipt	CP PROPERTIES GROUP LLC		$3.65	EDA Loan Interest Payme	01/26/18	205
January	9459	084245	10	Cash Receipt	PLUG TECHNOLOGIES, INC		$20.46	EDA Loan Interest Payme	01/04/18	205
February	9496	084381	10	Cash Receipt	PLUG TECHNOLOGIES, INC		$21.72	EDA Loan Interest Payme	02/06/18	205
March	384		30	Journal Entry			-$804.32	Allocate 1st Quarter 2018		205
March	9519	084450	10	Cash Receipt	CP PROPERTIES GROUP LLC		$3.57	EDA Loan Interest Payme	02/27/18	205
March	9563	084546	10	Cash Receipt	CP PROPERTIES GROUP LLC		$2.84	EDA Loan Interest Payme	03/27/18	205
March	9543	084492	10	Cash Receipt	MARIS EHLERS PHOTOGRAPY		$1.77	EDA Loan Interest Payme	03/12/18	205
March	9530	084474	10	Cash Receipt	PLUG TECHNOLOGIES, INC		$17.77	EDA Loan Interest Payme	03/06/18	205
April	9567	084585	10	Cash Receipt	PLUG TECHNOLOGIES, INC		$17.70	EDA Loan Interest Payme	04/04/18	205
May	9590	084721	10	Cash Receipt	CP PROPERTIES GROUP LLC		$2.74	EDA Loan Interest Payme	04/26/18	205
May	9605	084778	10	Cash Receipt	PLUG TECHNOLOGIES, INC		$17.60	EDA Loan Interest Payme	05/04/18	205
June	9726	085031	10	Cash Receipt	CP PROPERTIES GROUP LLC		$2.21	EDA Loan Interest Payme	06/26/18	205
June	9692	084872	10	Cash Receipt	CP PROPERTIES GROUP LLC		$2.44	EDA Loan Interest Payme	05/29/18	205

Period Name	Refer	Check Nbr	Tran Nbr	Tran Name	Search Name	Invoice	Amount	Comments	Check/Receipt Date	Fund
June	9700	849220	10	Cash Receipt	PLUG TECHNOLOGIES, INC		$18.00	EDA Loan Interest Payme	06/05/18	205
Account Descr R 205-36210 Interest Earnings							-$671.85			
Account Descr R 205-36215 Investment Income/Loss										
March	384		30	Journal Entry			$1,372.10	Allocate 1st Quarter 2018		205
Account Descr R 205-36215 Investment Income/Loss							$1,372.10			
PL Type *R Revenue							$21,169.11			
PL Type -E Expenditure										
Account Descr E 201-41330-306 Dues & Subscriptions										
April	2343	033403	20	Cash Payment	INITIATIVE FOUNDATION	9978	$310.00	Endowment Pledge - 201	04/17/18	201
Account Descr E 201-41330-306 Dues & Subscriptions							$310.00			
Account Descr E 201-41330-310 Other Professional Services										
April	2344	033410	20	Cash Payment	ROBERT J. HIIVALA		$736.00	11234 River Road NE: Pro	04/17/18	201
May	9589	018348	10	Cash Receipt	JOINT POWERS WATER BOARD		$23.58	Refund of Fees since Hou	04/23/18	201
May	2361	002341	20	Cash Payment	WSB & ASSOCIATES, INC.	11753-1-	$147.00	Downtown Parking Lot: M	05/15/18	201
June	2355	002350	20	Cash Payment	S E H	349208	$640.00	EDA Services - April 2018	06/05/18	201
June	2386	002367	20	Cash Payment	WSB & ASSOCIATES, INC.	11753-2-	$2,948.00	Downtown Parking Lot: A	06/05/18	201
Account Descr E 201-41330-310 Other Professional Services							$4,494.58			
Account Descr E 201-41330-437 Other Miscellaneous										
February	2299	033255	20	Cash Payment	VISA - BANKWEST		$75.01	EDA Property: Asbestos R	02/06/18	201
February	2258	033257	20	Cash Payment	WEX BANK - PW	5283116	$137.64	Trac Hoe for EDA House	02/06/18	201
March	2309	033311	20	Cash Payment	HANOVER HISTORICAL SOCIETY		$500.00	Donation from EDA	03/06/18	201
April	2316	033374	20	Cash Payment	VISA - BANKWEST	LP-11706	$19.95	EDA Website Domain	04/03/18	201
May	2381	033458	20	Cash Payment	HANOVER HARVEST FESTIVAL		$1,500.00	Hanover Harvest Festival	05/15/18	201
May	2344	033431	20	Cash Payment	RAMBOW	590803	$1,740.00	EDA Social 2018 - Yeti 20	05/01/18	201
May	2354	002340	20	Cash Payment	RIVER INN		$241.59	EDA Social 2018: 30 Gue	05/15/18	201
Account Descr E 201-41330-437 Other Miscellaneous							$4,214.19			
PL Type -E Expenditure							$9,018.77			
Act Year 2018							$33,283.05			
							$33,283.05			

HANOVER

Expenditure Budget Report - EDA

Dept Abbrev	Account Descr	June 2018 Amt	2018 YTD Amt	2018 YTD Budget	2018 YTD Balance	%YTD Budget
Fund 205 EDA BUSINESS INCENTIVE FUND						
Dept 46500 Economic Develop mt (GENERAL)						
ECODEVE	E 205-46500-810 Refunds & Reimbursemen	$0.00	$0.00	$0.00	$0.00	0.00%
Dept 46500 Economic Develop mt (GENERAL)		$0.00	$0.00	$0.00	$0.00	0.00%
Dept 49300 Other Finanacing Uses						
OTHFINU	E 205-49300-317 EDA BIF: Rent Reimburse	$0.00	$0.00	$0.00	$0.00	0.00%
OTHFINU	E 205-49300-318 EDA BIF: Matching Grant	$0.00	$0.00	$0.00	$0.00	0.00%
OTHFINU	E 205-49300-319 EDA BIF: EDA Loan	$0.00	$0.00	$0.00	$0.00	0.00%
Dept 49300 Other Finanacing Uses		$0.00	$0.00	$0.00	$0.00	0.00%
Fund 205 EDA BUSINESS INCENTIVE FUND		$0.00	$0.00	$0.00	$0.00	0.00%

HANOVER

Expenditure Budget Report - EDA

Dept Abbrev	Account Descr	June 2018 Amt	2018 YTD Amt	2018 YTD Budget	2018 YTD Balance	%YTD Budget
		$3,588.00	$8,971.61	$50,000.00	$41,028.39	17.94%

Borrower	6/29/2018	Paid Through
CP Properties	$ 1,100.47	June
Maris Ehlers Photography	$ -	Paid In Full
Plug Technologies, Inc.	$ 9,695.16	June
	$ -	
Total	**$ 10,795.63**	

To: **Members of the Hanover EDA**

From: **Brian Hagen, City Administrator**

Re: **Matching Grant Request – Hanover Dental Signage**

Date: **July 6, 2018**

The purpose of this memo is to outline the request and options to consider regarding an application to the EDA's Matching Grant Program. Hanover Dental is a new business currently under construction with plans to open October of 2018. As part of Site Plan approval, the City Council encouraged Hanover Dental to apply for EDA incentive funds to add to the exterior aesthetics of the building. On April 17, 2018, the City Council approved the EDA's support of grant funds up to $7,500 towards the addition of masonry block to the front of the building.

Enclosed with this memo is an application from Hanover Dental to the EDA's Matching Grant Program for signage. The request outlines a plan to install wall signage on the south gable of the building as well as a monument sign near the intersection of 5th St. NE and CSAH 19. In reviewing the City Code, the applicant meets City Code requirements of signage area, setbacks, and height restrictions.

Below are options for the EDA to consider:

Option 1:
Deny the request with a finding that the request does not meet the program guidelines.

Option 2:
Approve the request in whole with a finding that the request meets program guidelines and the EDA's intent to promote economic development. The request calls for $5,491 in both grant and loan funds. Loan funds would be awarded upon final approval by the City Council and grant funds would be reimbursable upon completion of the project. Should loan funds be approved, a term shall be set with a max of 36 months. This request at a 36-month repayment period would equal $152.53/mo. payments. The loan would be administered by staff.

Option 3:
Approve a variation of the request. This is possible due to the EDA programs being considered on a case by case basis. Given that signage is typical of businesses, the EDA could support funding for the extra signage and added aesthetics of the monument sign. The EDA could also support a variation to the funding request as well. I.e. only loan portion, only grant portion, a different amount than requested.

I have included a copy of the Hanover Matching Grant Program Guidelines to reference.

City of Hanover
Economic Development
Authority

11250 5th St NE
Hanover, Minnesota 55341
763-497-3777
cityhall@ci.hanover.mn.us

HANOVER MATCHING GRANT PROGRAM APPLICATION

Business Name: Hanover Dental **Time in Operation:** ____yrs. ____mos. opening in October!

Description of Business:
General Dentistry Practice

Description of Improvements: Signage for the south gable and a monument. The monument sign will have iron lattice work, ~~to~~ which will mimic the historic bridge.

Total Project Costs: $21,965
**Please include an itemized list of estimated costs you will incur.*

Amount Requested:
Grant Portion: $5,491 **Loan Portion:** $5,491
**Please reference the program guidelines for details.*

Applicant Signature: [signature] **Date:** 6/25/18

Address: 1192 Bice Ave NW; Buffalo, MN 55313

Email: tytv.kavisto@gmail.com **Phone:** 763 226 7379

Property Owner Signature: [signature] **Date:** 6/25/18

Email: " " **Phone:** " "

Gmail

Tyler Koivisto <tyler.koivisto@gmail.com>

steel & sign

Tim Keppel <Tim@heritageconstructionmn.com> Tue, Jun 5, 2018 at 4:07 PM
To: Tyler Koivisto <tyler.koivisto@gmail.com>
Cc: Tim Keppel <Tim@heritageconstructionmn.com>

Tyler, I would figure $14,000 for the sign. This cost most likely will be less than this though. My concrete guy needs more information on the footings to get a hard number.

Tim Keppel

Project Manager

Heritage Construction Companies, LLC.

10908 171st Ave. NW, Suite C, Elk River, MN 55330

tim@heritageconstructionmn.com EMAIL

763.633.4080 OFFICE

763.633.4082 FAX

763.486.5259 MOBILE

763.200.1588 DIRECT

MN LIC# 20626330 WI LIC# 1229175

Lead Cert# NAT-64226-2

www.HeritageConstructionMN.com

→ The $14,000 here is from the contractor (steel, electrical and concrete). Hard number coming.

→ The sign guy (Bob's sign company) will do lit portion of the signs for $7,965.

→ [$3,885 for monument and $4,080 for gable].

This message is privileged and confidential. The information contained in this message and any attachment hereto is confidential and is for the sole use of the intended recipient(s). If you are not the intended recipient, or an employee or agent responsible for delivering this message to the intended recipient, you are hereby notified that any review, dissemination, distribution or copying of this message may be a violation of law and is strictly prohibited. If you have received this message in error, please notify the sender immediately and delete the original and all copies of this message.

From: Tim Keppel
Sent: Wednesday, May 30, 2018 2:02 PM
To: Tyler Koivisto <tyler.koivisto@gmail.com>

QUOTE

5-26-15
DATE

Hanover

[redacted]

~~ANOKA~~ DENTAL

BOB'S SIGN COMPANY

421 Van Buren St.
Anoka, MN 55303
(763) 441-8021

Large or Small Signs
Vehicle Lettering & Graphics
Magnetic Signs
Banners
Installation & Repairs

Qty Ordered	Description	Price	Total
	1 - LIGHTED SIGN		
	90" X 126" L.E.D. LIGHTED SIGN, SINGLE FACE,		
	WALL MOUNT, ALUM. EXTRUSION, PANNED		
	FORMED FACE. U.L. APPROVED		$5,730.00
*	2 - LIGHTED LETTERS		
	35" X 126" L.E.D. LIGHTED LETTERS ON		
	RACEWAY, U.L. APPROVED		$4,080.00
	Selecting option #2		

Thank You

QUOTE

421 Van Buren St.
Anoka, MN 55303
(763) 441-8021

Large or Small Signs
Vehicle Lettering & Graphics
Magnetic Signs
Banners
Installation & Repairs

3-9-18
DATE

[redacted]

HANOVER DENTAL
411 LEBEAUX AVE NE
HANOVER, MN

Qty Ordered	Description	Price	Total
	LIGHTED MONUMENT SIGN		
	4' X 10' X 12 5/8" DEEP ALUMINUM EXTRUTION		
	.177 FLAT POLYCARBONATE FACES		
	VINYL GRAPHICS, U.L. APPROVED		$3,885.00

Thank You

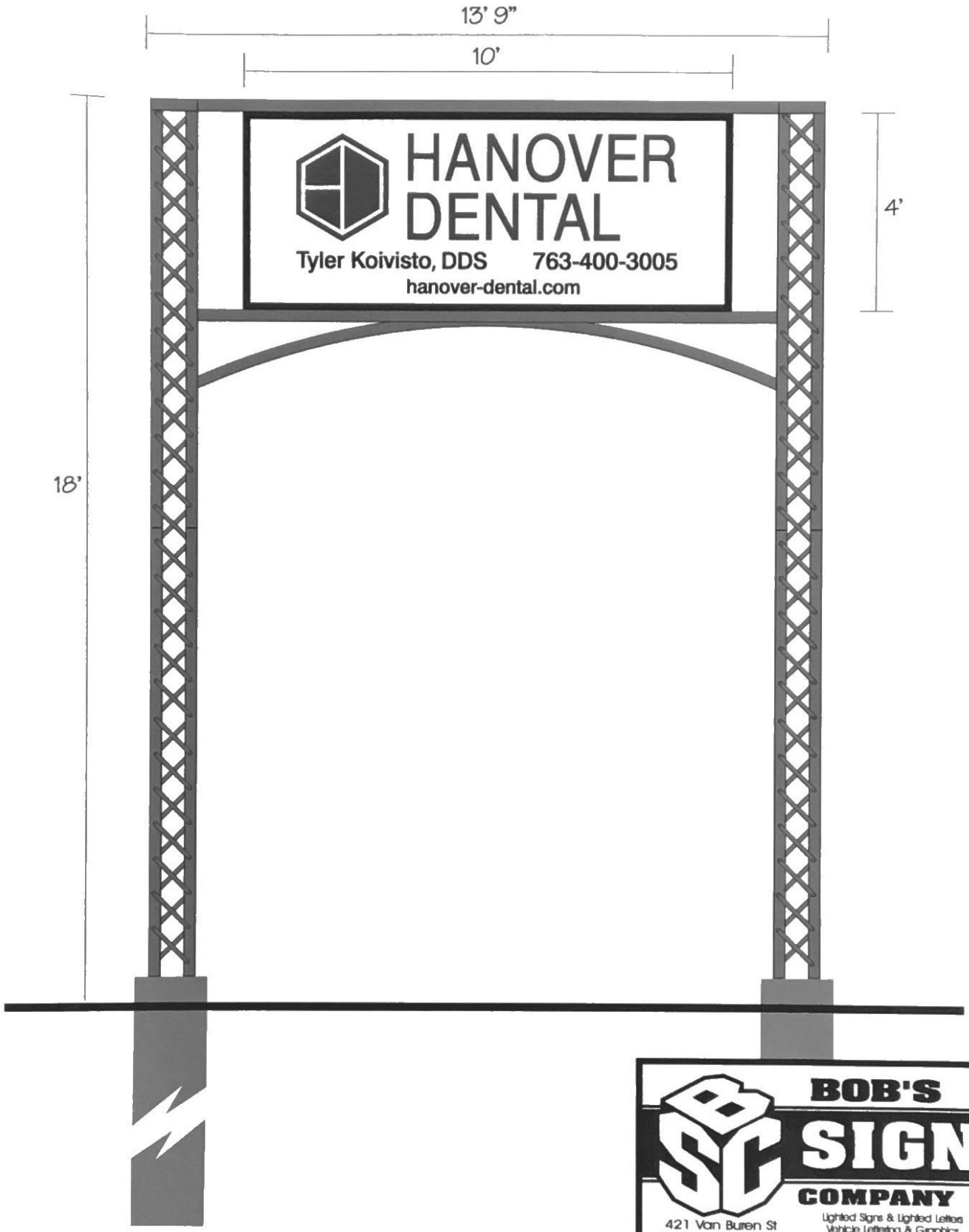

This Drawing Is Not To Be Copied Or Reproduced Without Permission From B.S.C.

BOB'S SIGN COMPANY
421 Van Buren St
Anoka, MN 55303
(763) 441-8021

Lighted Signs & Lighted Letters
Vehicle Lettering & Graphics
Magnetic Signs
Banners
Installation & Repairs

2

A2
A-201
EXTERIOR ELEVATION

NORTH

Sjoquist Architects, Inc
2800 University Avenue SE #100
Minneapolis, Minnesota 55414
612.379.9233 Fax 612.379.9263

1728
2018.02.15
ACK CLR

HANOVER DEN
HANOVER, MINNESO

LIGHTED LETTERS 3'4" x 11'9" = 39.16 sq. ft.

This Drawing Is Not To Be Copied Or Reproduced Without Permission From B.S.C.

BOB'S SIGN COMPANY
421 Van Buren St
Anoka, MN 55303
(763) 441-8021
Lighted Signs & Lighted Letters
Vehicle Lettering & Graphics
Magnetic Signs
Banners
Installation & Repairs

Sjöquist Architects, Inc
2800 University Avenue Southeast, Suite 100
Minneapolis, Minnesota 55414
612. 379. 9233, Fax 612. 379. 9263

Request For Information

TO:	Heritage Construction Companies, LLC Suite 300, 10908 171st Avenue NW Elk River, MN 55330	DATE:	June 22, 2018
		RFI #:	Two
		PROJECT #:	1728
		BY:	Carl Robertson
PROJECT:	Hanover Dental	CC:	

Please provide price implications for the following change(s) to this project.

1. Final prices for pylon sign as per attached details

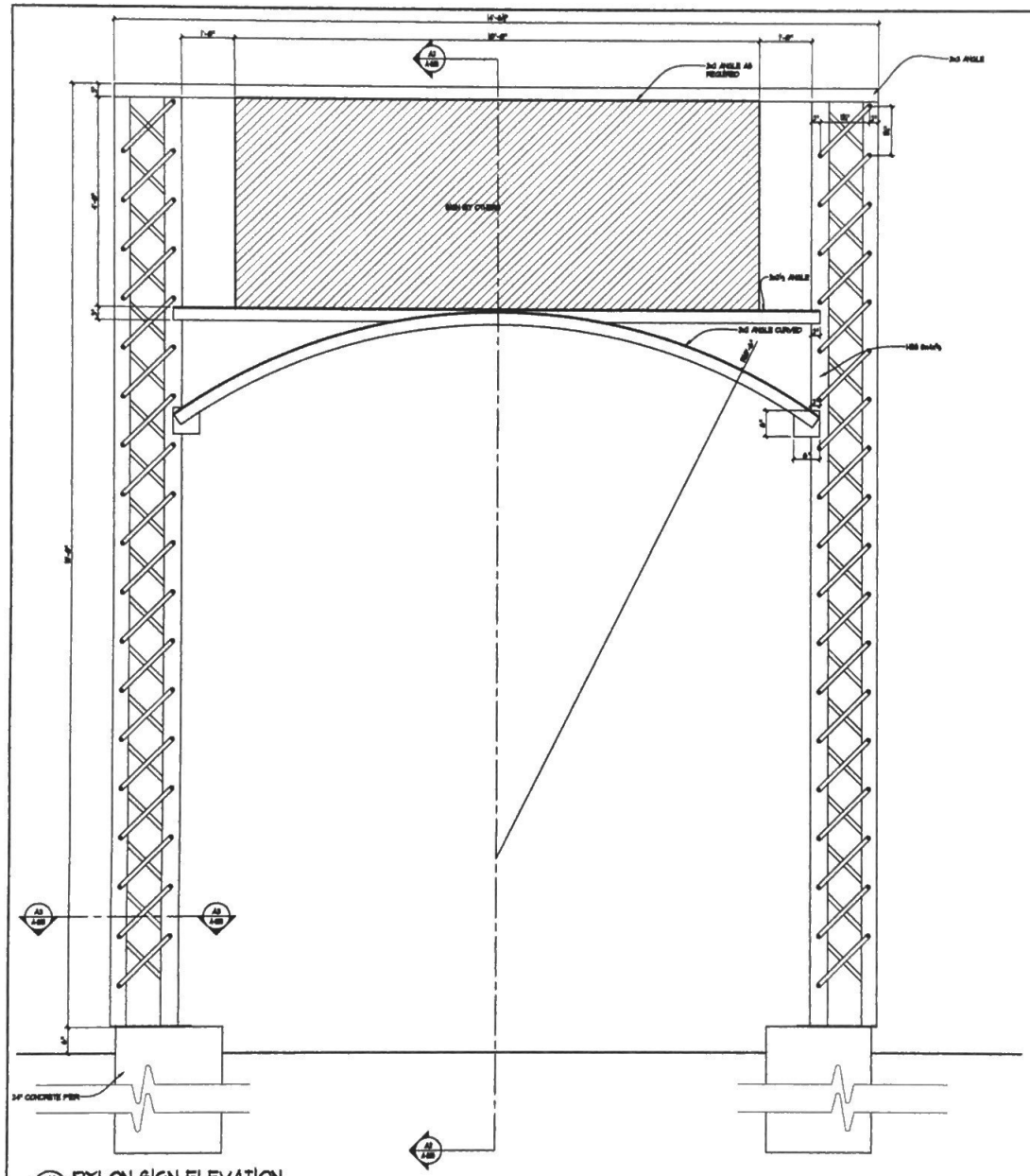

A1 A-803 PYLON SIGN ELEVATION
P = 1'-0"

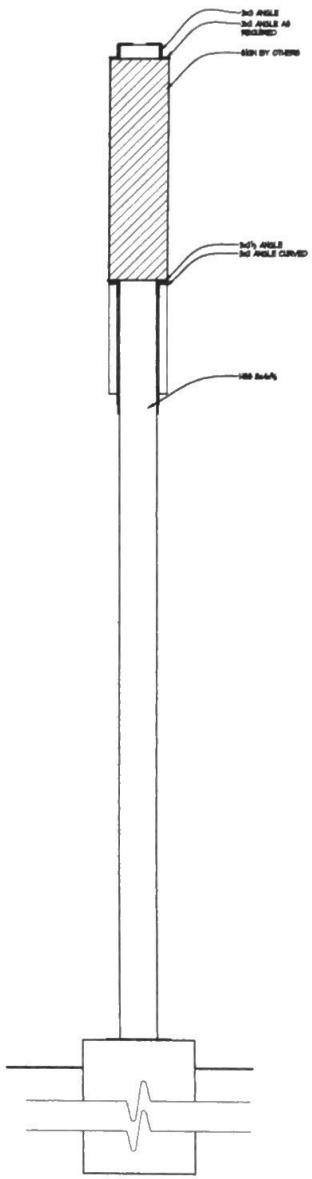

A2 A-803 SECTION @ SIGN
P = 1'-0"

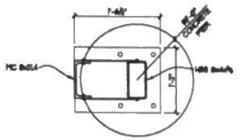

A3 A-803 SECTION @ COLUMN
P = 1'-0"

Sjoquist Architects, Inc
3800 University Avenue NE, Suite 100
Minneapolis, Minnesota 55414
612.379.9353 Fax 612.379.9363
http://www.sjoquist.com

I hereby certify that this plan, specification, or report was prepared by me or under my direct supervision and that I am a duly Licensed Architect under the laws of the state of

MINNESOTA

Signature

C.L. ROBERTSON / 22779
Printed / Registration

10.9.09
Date

ACK
Drawn

CLR
Checked

Revisions

1728
Project Number

NEW BUILDING
HANOVER
DENTAL

411 LABEAUX AVENUE NE

HANOVER
MINNESOTA

1" = 1'-0"

PYLON SIGN DETAILS

A-803

PARKING REQUIREMENTS 6 SPACES PER DR = 6 SPACES

PARKING PROVIDED = 12 SPACES

SEE AS102 FOR ENLARGED SITE PLAN

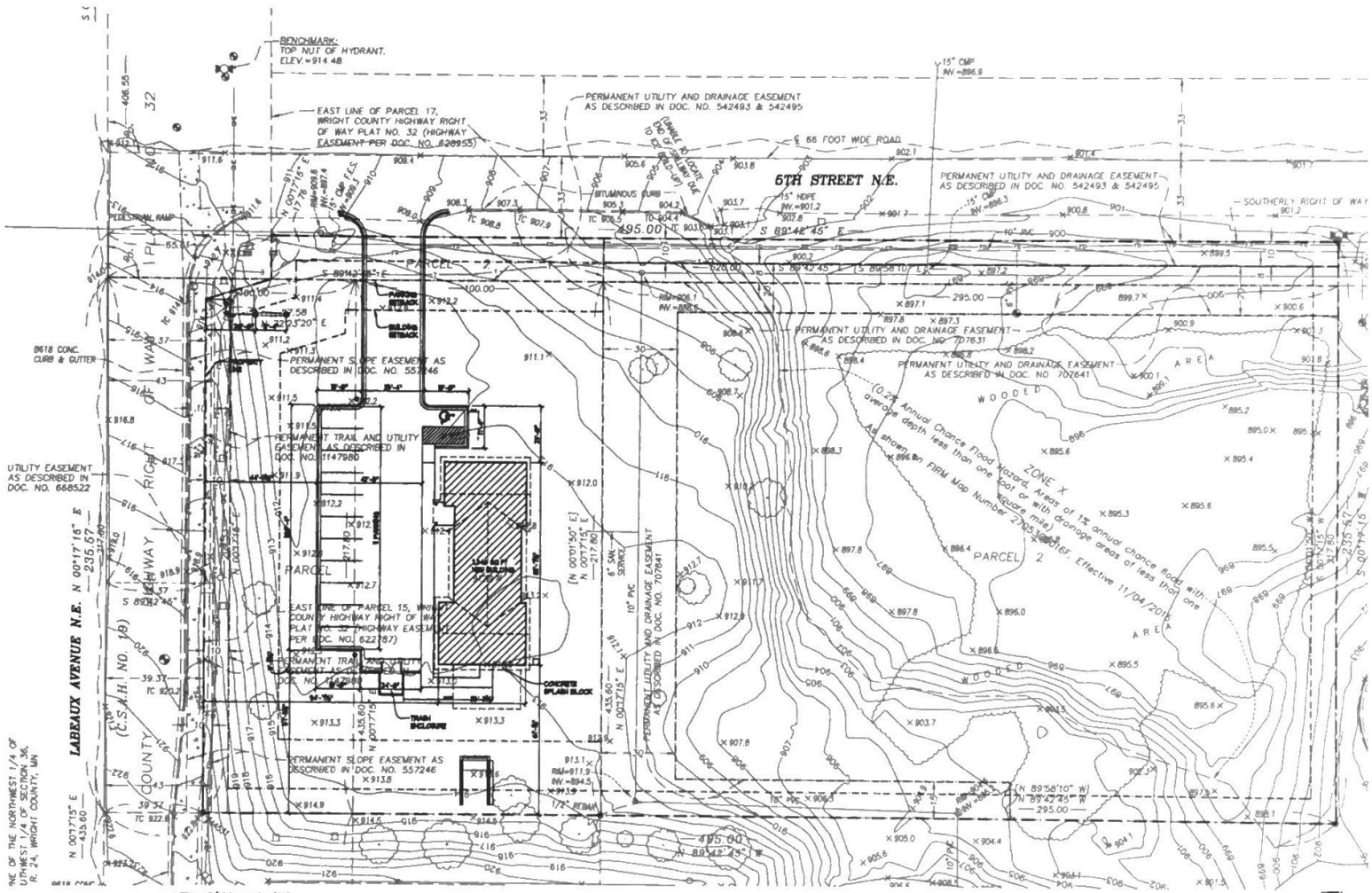

A1 SITE PLAN
1" = 30'

Sjoquist Architects, Inc
3800 University Avenue SE, Suite 100
Minneapolis, Minnesota 55414
612.379.9283 Fax 612.379.9363
http://www.sjoquist.com

I hereby certify that this plan, specification, or report was prepared by me or under my direct supervision and that I am a duly Licensed Architect under the laws of the state of

MINNESOTA

Signature

C. L. ROBERTSON / 22779
Architect / Registration

10.09.09
Date

SCK CLR
Drawn Checked

Revisions

1728
Project Number

NEW BUILDING
HANOVER DENTAL

411 LABEAUX AVENUE NE
HANOVER
MINNESOTA

SITE PLAN

AS101

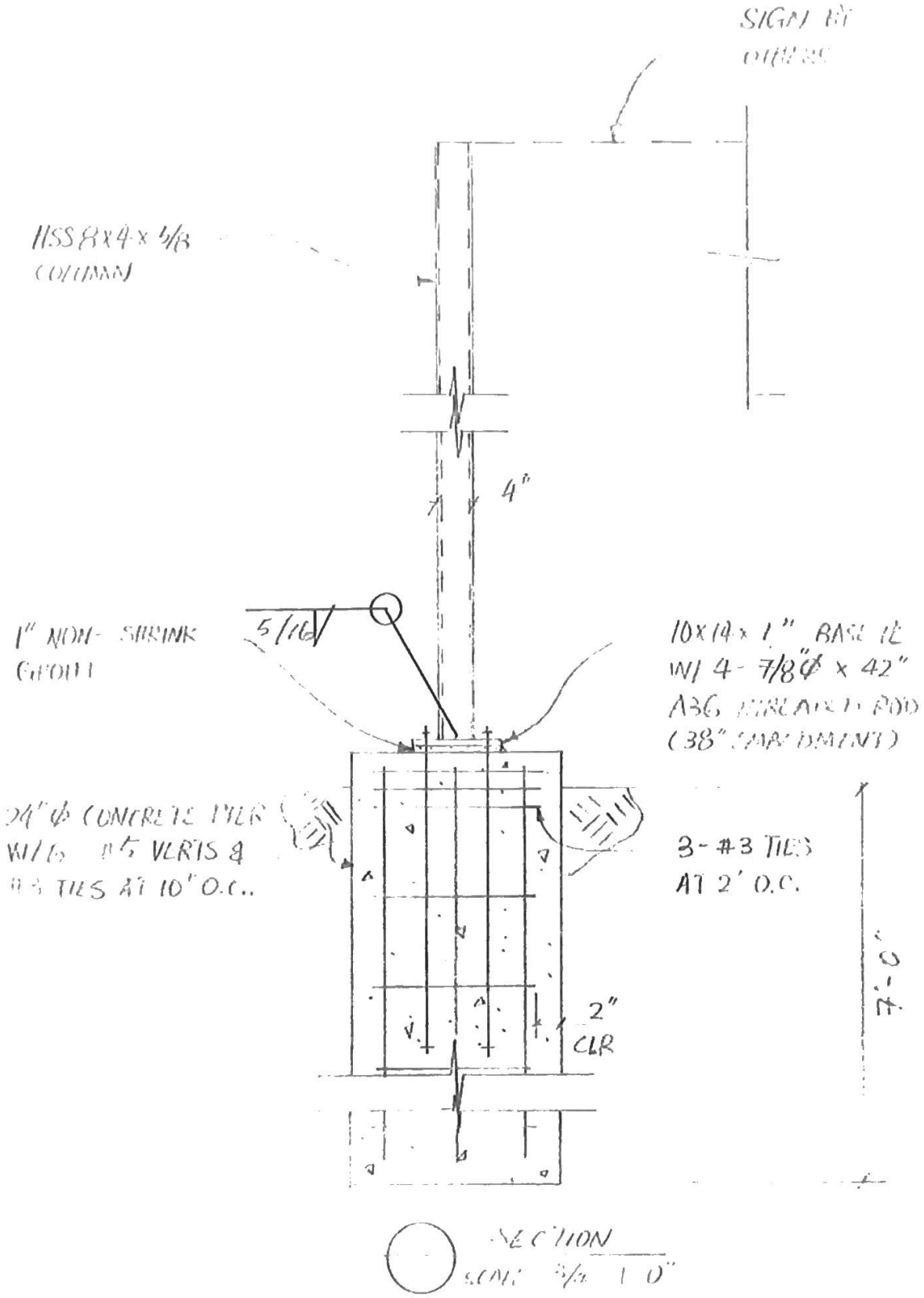
SIGN BY
OTHERS
HSS 8x4x 5/8
COLUMN
4"
1" NON-SHRINK
GROUT
5/16
10x14x 1" BASE PL
W/ 4- 7/8"Ø x 42"
A36 THREADED ROD
(38" EMBEDMENT)
24"Ø CONCRETE PIER
W/ 6 #5 VERTS &
#3 TIES AT 10" O.C..
3-#3 TIES
AT 2' O.C.
7'-0"
2"
CLR
SECTION
SCALE 3/4" = 1'-0"

City of Hanover
Economic Development
Authority

11250 5th St NE
Hanover, Minnesota 55341
763-497-3777
cityhall@ci.hanover.mn.us

HANOVER MATCHING GRANT PROGRAM GUIDELINES

I. PURPOSE OF THE MATCHING GRANT PROGRAM

The purpose of the fund is to promote and encourage economic development and retention in compliance with the existing Business and River District performance standards and historical guidelines.

II. ELIGIBLE APPLICANTS

Eligible applicants include businesses located in existing structures within the corporate limits of the City of Hanover. Home based businesses are not eligible.

III. GENERAL GUIDELINES

- 50% of project costs privately funded
- 25% of project costs grant funded through EDA
  - Maximum contribution of $7,500
- 25% of project costs zero percent interest loan through EDA – max 36 month term
  - Maximum contribution of $7,500
- Loan balance must be paid in full upon sale of property
- Applicant may request only grant proceeds portion of EDA contribution of project costs

IV. ELIGIBLE ACTIVITIES/EXPENDITURES

- Landscaping
- Exterior Upgrades
- Ornamental Lighting
- Planters
- Benches
- Signage
- To conform to State building codes
- To conform to City codes and ordinances
- Parking enhancements
- Residential Conversions of 50% or more
- Security Improvements

V. INELIGIBLE ACTIVITIES

- Paint
- Routine Maintenance & Repairs
- Interior Renovations
- In house labor
- Residential Conversions under 50%

VI. APPROVAL PROCESS

- A current financial statement must be submitted with this application. In the event that this is a new start up and no financial statements exist, then a business plan must be submitted with this application.
- The City Administrator shall review the application for compliance and will then present it to the EDA Board for recommendation to the Hanover City Council.
- The Hanover Economic Development Authority will review each application on its own merit. The EDA will then make a recommendation on the application and forward it to the Hanover City Council for final action.
- Upon action by the Hanover City Council, the City Administrator will notify the applicant of the decision.
- The loan portion of the contribution shall be issued to the applicant upon final approval.
- The applicant shall perform the work as described in the application within 180 days. If the 180 day requirement is not met, the applicant will be required to reapply for the funds. Upon completion they shall request a final inspection and provide proof of all expenditures to the City Administrator. Once verified that all work has been done and the expenditures are in compliance with the terms of the Renovation Program, the City Administrator shall release the grant portion of the contribution.
- This program will not retroactively reimburse costs. Application must be received and approved prior to work commencing.

VII. EXAMPLES

- $20,000 estimated project costs
  - Eligible EDA contribution of $10,000 total
    - $5,000 grant proceeds
    - $5,000 loan proceeds
  - Loan balance provided at beginning of project with grant balance provided following completion of project
  - Loan repaid over max 36 month term

- $20,000 estimated project costs
  - Eligible EDA contribution of $10,000 total
    - Applicant desires only grant portion of $5,000
  - Grant balance provided following completion of project