ARTICLE 6

PRELIMINARY PLAT

SECTION:

30-06-01: Preliminary Plat
30-06-02: Information Required for Preliminary Plat
30-06-03: Determination of Requirement for Environmental Review Documents
30-06-04: Additional Information Required
30-06-05: Filing and Review of Application

30-06-01: PRELIMINARY PLAT: After the completion of the concept plan process, the owner or developer shall file with the City of Hanover an application for preliminary plat. The preliminary plat stage is the point in the process that all information pertinent to the proposed development is furnished by the developer for review by the City Staff, City advisory committees, and the City Council, any other applicable agencies, and the public. The information provides a basis for approval or denial of the application. The information submitted in the application shall address both existing conditions and changes that will occur during and after development. The preliminary plat is a plan of how property will be subdivided and developed.

A. Additional information or modifications may be required by the City Staff, City advisory committees, or City Council and additional information may be requested during the review process. In certain cases, some information required by these standards may not be appropriate or may need to be modified in order to provide an adequate basis for making a decision.

30-06-02: INFORMATION REQUIRED FOR PRELIMINARY PLAT: Preliminary plat information is typically furnished on plan sheets. However, some information is more appropriately submitted in other forms. The plat, and associated information, shall be submitted in a form that is legible, organized and understandable. The preliminary plat application shall consist of maps and accompanying documents.

A. Upon filing of the preliminary plat the applicant will also be required to make a deposit as set by the City Council by Ordinance into an escrow account. All time, services, and material will be billed to the escrow account, and shall be itemized. Upon completion of payments of all required engineering, legal, planning and other fees the remainder in the escrow account shall be refunded to the applicant. If at any time it appears that a deficit will occur in an escrow account, the Clerk-Treasurer may then require an additional deposit made to the escrow account to sufficiently cover additional expenses. Failure by the applicant to make such deposits or to pay the City money owed for legal, engineering,

planning or other services for which the applicant is responsible, shall be grounds for denial or cessation of work on the particular project.

B. An owner or applicant shall submit ten (10) large-scale copies (not less than one (1) inch equals one hundred (100) feet) and one (1) reduced scale copy (11" by 17") of detailed written materials, plans and specifications to include the following information:

C. Additional large-scale copies shall be provided for each of the following, if applicable:

1. Project is adjacent to a county road or county state aid highway (2)

2. Project lies within a Shoreland Management Overlay District or Floodplain Overlay District (1)

3. Project lies adjacent to Rockford or Hassan Township or within an Orderly Annexation Area (2)

4. Project lies next to a county or regional park (1).

D. Plans:

1. Certificate of survey.

2. Resource inventory.

3. Preliminary plat.

4. Preliminary grading, drainage and erosion control plan.

5. Storm Water Pollution Control Plan.

6. Preliminary utility plan.

7. Wetland delineation and mitigation plan.

8. Yield plan (if determined necessary by the Zoning Administrator).

9. Environmental evaluations (if determined necessary by the Zoning Administrator).

E. Certificate of Survey prepared by a licensed land surveyor identifying the following:

1. Scale (engineering only) at not larger than one (1) inch equals one hundred (100) feet.

2. North point indication.

3. Existing parcel boundaries to be platted with dimensions and area.

4. Existing legal description.

5. Easements of record.

6. Delineated wetland boundary, to include the ordinary high water level (OHWL) of any lakes or Department of Natural Resources (DRY) waters. Floodplains as shown on Federal Emergency Management Agency (FEMA) FIRM map.

7. Shoreland Tier locations if the project is a Planned Unit Development located within a Shoreland Management Overlay District.

8. All encroachments.

9. Existing buildings structures and improvements within the parcel to be platted and those three hundred (300) feet outside the boundaries of the subject parcel.

10. Location, widths and names of all public streets, rights-of-way or railroad rights-of-way showing type, width and condition of the improvements, if any, which pass through and/or are within three hundred (300) feet.

11. The outside boundary of the subject property is to be clearly marked with survey monuments.

F. Resource Inventory.

1. Topographic contours at two (2) foot intervals and showing slopes of more than twelve (12) percent.

2. Soil type locations and identification of soil type characteristics such as hydric soils, agricultural capability, depth to bedrock, and suitability for wastewater disposal systems, if applicable. (General soils information available from Hennepin and Wright County Soil Survey). Soil borings are to be provided at reasonable intervals, both within the area to be subdivided and within 300 feet of the perimeter, in sufficient quantity to indicate water table level and soil types.

3. Hydrologic characteristics, including surface watercourses, floodplains, delineated wetlands, natural swales, and drainage ways. Ordinary high water level and 100 year storm elevations of adjoining water courses, lakes, wetlands, streams, etc. at the date of the survey and approximate high and low water elevations.

4. Tree inventory identifying vegetation of the site, according to general cover type (pasture, woodland, etc.), defining boundaries of woodland areas and individual significant trees as defined by this Chapter and a tree preservation plan as required by this Chapter. Vegetative types shall be classified as generally deciduous, coniferous or mixed and described by plant community, relative age and condition.

5. Neighborhood Context. General outlines of existing buildings, land use, and natural features such as water bodies or wooded areas, roads, driveways, and property boundaries within three hundred (300) feet of the tract. This information may be presented on an aerial photograph at a scale of no less than one (1) inch to two hundred (200) feet.

6. Photographs, identifying camera location, directions of views, and key numbers.

G. Preliminary Plat

1. The proposed name of the plat which name shall not duplicate the name of any plat theretofore recorded in the County. The first phase of the development shall be called out as the “First Addition.” All subsequent phases shall be consecutively numbered.

2. Date of application, name, address, phone number and applicable license or registration number of the owner, developer, agent, applicant, engineer, surveyor, planner, attorney lien holders or other principle involved in the development of the plat.

3. Proof of ownership or legal interest in the property in order to make application.

4. Existing Comprehensive Plan land use and zoning designation within and abutting the proposed plat. Any zoning changes needed, or reference to any zoning or similar land use actions that are pertinent to the proposed development.

5. Proposed uses of the lots and parcels, and an outline of proposed deed restrictions or protective covenants.

6. Total acreage of the land to be subdivided and total upland area (land above the ordinary high water mark of existing wetlands, lakes and rivers).

7. Boundary line survey and legal description.

8. North arrow and graphic engineering scale of one (1) inch equals one hundred (100) feet.

9. Existing covenants, liens, or encumbrances.

10. Proposed lot lines, dimensions, and the gross and buildable acreage of all lots. When lots are located on a curve in a road or cul-de-sac, the lot width at the building setback line shall be shown. Proposed lot and block numbers.

11. Building pad, minimum building setbacks shown on each lot indicating dimensions of the setbacks. Location and width of buffer yards where the subdivision adjoins a collector or arterial street, railroad right-of-way or overhead transmission lines.

12. Layout of streets, showing right-of-way widths, centerline street grades (proposed grade of center lines of streets shall be shown at intervals of not more than fifty (50) feet on preliminary plat and profiles) and approximate radii of all curbs, proposed contours within the entire plat, and names of streets. The name of any street heretofore used in the City or its environs shall not be used, unless the proposed street is an extension of an already named street, in which event the name shall be used. Street names shall conform to the respective Hennepin or Wright County street naming and numbering system.

13. Access, right-of-way widths, driveways, and street classifications shall be consistent with the Hanover Transportation Plan.

14. Parks, trails, or other areas intended for public use or common ownership and their stated purpose.

15. Any additional information as requested by the Zoning Administrator.

16. Dates of plan preparation and revision dates.

17. All delineated wetlands, the ordinary high water level (OHWL) of public waters and location of all watercourses and drainage ditches, including floodways, flood fringe, floodplain and Shoreland Management Overlay District boundaries.

H. Preliminary Grading, Drainage, Storm Water Pollution Control Plan and Erosion Control Plan. The developer shall submit a preliminary grading, drainage and erosion control plan utilizing a copy of the current certificate of survey as a base for the site in question, prepared by a licensed engineer. The grading plan shall be designed to avoid premature disruption of land and long-term storage of excess materials. The grading plan shall depict the following information:

1. Scale (engineering only) not larger than one (1) inch equals one hundred (100) feet.

2. North point indication.

3. Location of natural features including, but not limited to, tree lines, delineated wetlands, water courses, ponds, lakes, streams, drainage channels, ordinary high water level (OHWL) and 100 year storm elevations, bluffs, steep slopes, etc.

4. Existing contours at two (2) foot intervals shown as dashed lines for the subject property and extending three hundred (300) feet beyond the outside boundary of the proposed plat.

5. Proposed grade elevations at two (2) foot intervals shown as solid lines.

6. Proposed plan for surface water management, ponding, drainage and flood control, including the normal water level and high water level of all ponds and watercourses.

7. Provision for groundwater management including sub-surface drains, disposals, ponding, and flood controls.

8. Location of all existing storm sewer facilities including pipes, manholes, catch basins, ponds, swales and drainage channels within three hundred (300) feet of the subject property. Existing pipe sizes, grades, rim and invert elevations and normal and high water elevations must be included.

9. If the subject property is within or adjacent to a floodplain, flood elevation and locations must be shown.

10. Spot elevations at drainage break points and directional arrows indicating site, swale and lot drainage.

11. Lot and block numbers, building style, building pad location and elevations at the lowest floor and garage slab for each lot.

12. Locations, sizes, grades, rim and invert elevations of all proposed storm water facilities, including ponds, proposed to serve the subject property.

13. Phasing of grading.

14. The location and purpose of all oversize, non-typical easements.

15. All soil erosion and sediment control measures to be incorporated during and after construction must be shown. The plan shall include gradients of waterways, design of velocity and erosion control measures, design of sediment control measures, and landscaping of the erosion and sediment control system. Such plans are to be in accordance with the technical standards and specifications of the Soil Conservation Service, as provided by the Wright or Hennepin County Soil and Water Conservation District Office and the Minnesota Department of Transportation.

16. All re-vegetation measures proposed for the subject property must be included on the plan, including seed and mulch types and application rates.

17. Drainage plan, including the configuration of drainage areas and calculations for one (1) year, ten (10) year, and one hundred (100) year storm events.

18. Layout of proposed streets showing centerline gradients, section widths, and typical cross sections.

19. Date of plan preparation and dates of all revisions.

I. Preliminary Utility Plan. The developer shall submit a preliminary utility plan utilizing a copy of the current certificate of survey as a base for the site in question, prepared by a licensed engineer, depicting the following information:

1. Scale (engineering only) not larger than one (1) inch equals one hundred (100) feet.

2. The location, dimensions, and purpose of all easements.

3. Location and size of existing sanitary sewers, water mains, culverts, or other underground facilities within the subject property and to a distance of three hundred (300) feet beyond the outside boundary of the proposed plat. Data such as grades, invert elevations, and location of catch basins, manholes and hydrants shall also be shown.

4. Location and size of proposed sanitary sewers, water mains, culverts and other stormwater facilities, or other underground facilities within the subject project and to a distance of three hundred (300) feet beyond the outside boundary of the proposed plat. Data such as grades, invert

elevations, and location of catch basins, manholes and hydrants shall also be shown.

5. Water mains shall be provided to serve the subdivision by extension of an existing municipal system.

6. Municipal sanitary sewer trunk facilities, laterals and service connections shall be designed and installed in accordance with the design standards approved by the City Engineer.

7. The location of hydrants and valves for all proposed water mains.

8. All other utilities shall be located and designed in accordance with the requirements of the City Engineer.

9. Date of plan preparation and dates of all revisions.

J. Yield Plan. If the project includes a conservation subdivision design or cluster planned unit development, the applicant shall submit a yield plan showing the maximum number of dwelling units that would be permitted given the minimum lot size and lot widths for conventional subdivisions and other requirements of the Hanover Zoning Ordinance and Subdivision Ordinance. The yield plan need not be engineered, however, it shall be drawn to scale and it shall identify all the major physical features on the parcel and shall include:

1. Any required zoning changes.

2. Minimum lot areas and widths shall conform to the proposed zoning for the site.

3. Lot areas shall consist of buildable land as defined by the Hanover Zoning Ordinance.

K. Property corners, proposed parks and trails shall be staked in the field to allow City Staff, Board and Commission Members and the City Council to view the subject site and areas proposed to be dedicated for public parks, open space and trails.

30-06-03: DETERMINATION OF REQUIREMENT FOR ENVIRONMENTAL REVIEW DOCUMENTS:

A. The Zoning Administrator shall review the preliminary plat and shall determine if the project crosses any mandatory thresholds for an Environmental Assessment Worksheet (EAW), Environmental Impact Statement (EIS), or Alternative Urban

Area-Wide Review (AUAR) pursuant to Minnesota Rules. If such documents are required, the Zoning Administrator shall notify the developer of the requirement.

B. An escrow deposit in addition to the standard requirements shall be submitted by the applicant to cover City costs reviewing and administering an EAW, EIS or AUAR.

30-06-04: ADDITIONAL INFORMATION REQUIRED:

A. Evaluation by the applicant that the subdivision would not be determined to be premature pursuant to the criteria outlined by the Comprehensive Plan and this Chapter.

B. Phasing Plan. All preliminary plats shall include a phasing plan that includes:

1. The sequence of development and approximate areas, number of lots in each phase, and total area and buildable area per phase serially numbered with a description of each phase. Information shall be provided regarding the number of dwelling units, proposed improvements, and common facilities for each.

2. Any trail/sidewalks within the approved phase of the preliminary plat shall be constructed along with streets and utilities and shall be clearly marked on a site map that shall be an attachment to all sales agreements for individual lots.

3. A site grading plan that is coordinated with the phasing plan to avoid premature disruption of land or long-term storage of excess materials.

4. A development agreement that includes a financial security to ensure completion of common facilities, trails, and landscaping shall be provided.

C. Documents outlining the content of proposed conservation easements, restrictive covenants, deed restrictions, and establishment of homeowners associations for review. Where the plat is intended to include common open spaces, these documents shall address ownership and long-term maintenance of open space areas.

D. Information or easements showing how public utilities, drainage, and roads can be extended to serve adjacent property.

E. Landscape and screening plans showing landscape plantings for street boulevards, subdivision entrances, and buffer yards, and specifying plant locations, varieties, sizes, including elevations of monument signs and the location, ownership, and maintenance responsibilities for the monument signs.

F. Traffic study for the subdivision including traffic generation, traffic distribution of the existing capacity of existing streets, and resulting level of service (LOS) of existing streets at the subdivision build out.

G. Examples of Housing Product. Illustration of typical building footprint, floor plans, and building elevations.

H. Soil tests for areas where streets are proposed and other soil information as requested by the City Engineer.

I. Three (3) copies of a wetland replacement plan shall be provided (if applicable).

J. The preliminary plat submittal must include a build out plan illustrating a realistic future urban lot and block layout and street system in the following situations. Development represented by this build out plan must be consistent with the future land use as depicted in the Comprehensive Plan.

1. If the proposed development would fully or partially isolate adjacent land such that development of the adjacent land would involve access through the proposed development, a build out plan for the adjacent land shall be submitted to show that the proposed development will not isolate the adjacent land and make it undevelopable according to City standards.

30-06-05: FILING AND REVIEW OF APPLICATION:

A. Procedure:

1. Pre-Application Meeting. Prior to submitting a preliminary plat application (following concept plan review), the property owner/applicant shall meet with the City Staff to discuss the preliminary plat application. Through this meeting, the Zoning Administrator may summarize the City's concept plan review comments and offer suggestions pertaining to additional information or design changes that may assist in expediting the preliminary plat review.

2. Neighborhood Meeting. The City strongly recommends the property owner/applicant hold a neighborhood meeting for informal comment and feedback prior to preliminary plat application.

3. The person applying for preliminary plat approval shall submit to the City a complete application and all other information required according to the deadline and meeting schedule established by the City. The application shall address the informational requirements of this Chapter and issues identified through the concept plan review procedure.

4. A complete preliminary plat application shall include:

   a. A graphic and written description of the information requirements outlined in this Chapter.

   b. Applications shall be accompanied by a fee and processing escrow established by the City Council.

5. The Zoning Administrator, upon receipt of the application, shall notify the applicant in writing within fifteen (15) business days if the application is found to be incomplete.

6. The Zoning Administrator shall refer copies of the preliminary plat to other staff, committees, consultants, or agencies as appropriate.

7. A preliminary plat abutting upon any existing or proposed trunk highway, county road or highway or county state-aid highway shall be subject to review of the Minnesota Department of Transportation and/or Hennepin or Wright County Highway Department. Written notice and a copy of the proposed preliminary plat shall be filed with the Minnesota Department of Transportation and/or Hennepin or Wright County Highway Department for review and comment. Final action on a preliminary plat shall not be taken until the minimum thirty (30) day review period has elapsed.

8 Preliminary plats located within a Shoreland Management Overlay District or Floodplain Overlay District shall be subject to review of the Minnesota Department of Natural Resources. Written notice and a copy of the proposed preliminary plat shall be filed with the Minnesota Department of Natural Resources at least ten (10) days prior to the public hearing.

9. Inconsistent Plats Reviewed by Commission of Natural Resources. All plats that are inconsistent with the City's Floodplain Overlay District and/or Shoreland Management Overlay District Articles of the Zoning Ordinance shall be reviewed by the Commissioner before approval by the City may be granted. Such review shall require that the proposed plats be received by the Commissioner at least ten (10) days prior to a public hearing for preliminary plat.

10. Upon receipt of a complete application, the Zoning Administrator shall prepare a report and refer the application to the City Engineer, City Attorney, City Planner and City advisory committees, including but not limited to the Park Commission, Economic Development Authority, the Planning Commission, as well as the City Council.

11. The application shall be reviewed by City advisory committees consultants and applicable agencies. The recommendations will be forwarded to the Planning Commission for their consideration of the application at a public hearing. The recommendation(s) of the Planning Commission shall be forwarded to the City Council for formal review of the preliminary plat.

12. The Planning Commission shall hold a public hearing on the proposed preliminary plat. Notice of the public hearing shall be published in the official newspaper designated by the City Council at least ten (10) days prior to the hearing. The City shall mail written notification of the proposed preliminary plat to property owners located within three hundred fifty (350) feet of the subject site. Timing of the mailed notice shall be the same as that for the published notice. The failure to give mailed notice to individual property owners or defects in the notice shall not invalidate the proceedings, provided a bona fide attempt to comply has been made.

13. The Planning Commission shall take public testimony at the public hearing and evaluate the requested preliminary plat against the premature subdivision criteria of this Chapter, the performance standards of this Chapter, the performance standards of the Hanover Zoning Ordinance, policies of the Comprehensive Plan, and other City requirements. The Planning Commission shall make findings and offer a recommendation for either preliminary plat approval or denial. The Planning Commission may offer a recommendation of approval with conditions necessary to satisfy City regulations.

14. The Zoning Administrator shall prepare a staff report of the findings and recommendations of the Planning Commission. The findings may include specific conditions of approval or findings related to denial of the plat.

15. The City Council shall take action on the application within one hundred twenty (120) days following delivery of a complete application in accordance with the regulations of this Chapter, unless an extension is agreed to in writing by the applicant. If it approves the preliminary plat, the City Council may impose conditions it considers necessary to protect the public health, safety and welfare.

    a. Conditional approval of a preliminary plat shall not constitute approval of the final plat. Rather it shall be deemed to be an expression of approval to the layout submitted on the preliminary plat, and act as an authorization and guide to proceed with the preparation of the final plat.

    b. The approval of the preliminary plat shall be effective for a period of one (1) year, unless an extension is granted by the City Council. The developer may file a final plat limited to such portion of the

preliminary plat that is proposed to be recorded and developed at the time, provided that such portion must conform to all requirements of this Chapter and the phasing plan approved as part of the preliminary plat.

16. Denial of Plat. The City Council may deny the subdivision if it makes any one or more of the following findings:

    a. That the proposed subdivision is in direct conflict with adopted applicable general and specific Comprehensive Plans of the City, Hennepin or Wright County.

    b. That the physical characteristics of this site, including but not limited to topography, percolation rate, soil conditions, susceptibility to erosion and siltation, susceptibility to flooding, water storage, drainage and retention, are such that the site is not suitable for the type of development, design, or use contemplated.

    c. That the site is not physically suitable for the proposed density of development.

    d. That the design of the subdivision or the proposed improvements are likely to cause substantial environmental damage.

    e. That the design of the subdivision or the type of improvements are likely to cause serious public health problems.

    f. That the design of the subdivision or the type of improvements will conflict with easements of record or with easements established by judgment of a court.

    g. That the proposed subdivision, its site, or its design adversely affects the flood-carrying capacity of the floodway, increases flood stages and velocities, or increases flood hazards within the floodway fringe or within other areas of the City.

    h. The proposed subdivision is inconsistent with the policies and standards of the State defined Shoreland, Floodplain and/or Wetland Overlay Districts.

17. The City Council shall take action on the application that shall include findings of fact, and shall be entered in the proceedings of the City Council and transmitted to the applicant in writing. The lack of a simple majority Council vote to affirmatively approve a preliminary plat shall be a denial of the requested application.

18. Grading of the site included in the preliminary plat may occur after approval of the preliminary plat and the approval and recording of a development agreement for the grading work, including financial securities. The grading development agreement shall comply with the requirements of this Chapter.

NEW CONSTRUCTION STANDARDS

Performance Standard	Current Ordinance
Minimum Lot Area	Interior: 12,000 sq. ft. Corner: 15,000 sq. ft.
Minimum Lot Width	80 feet
Minimum Lot Depth	No current regulation
Maximum Building Height	2.5 stories or 35 feet whichever is less
Minimum Building Height	14 feet
Minimum Dwelling Width	24 feet
Minimum Square Footage	1,000 sq. ft. above grade
House Orientation	Parallel to street Front facing to street
Roof Pitch	5:12
Front Yard Setback	30 feet
Side Yard Setback	10 feet
Side Yard Setback on Corner Lot abutting Street	Same as Front Yard Setback
Rear Yard Setback	30 feet
Minimum Garage Size	576 sq. ft.
Driveway Regulations	Minimum width of 10 feet Maximum width of 28 feet located between curb cut and property line. No closer than 5 feet from side or rear lot line Access point restrictions Corner clearance: 30 feet
Wetland Setback	30 feet
Arterial Road Setback	50 feet
Collector Road Setback	45 feet
Bluff Setback (Top of Bluff)	30 feet
GD and RD Waters Setback	75 feet
NE Waters Setback	200 feet

RESIDENT GUIDE #1

CROW RIVER HEIGHTS WEST THIRD ADDITION

May 5, 2018

Application:

The City has received an application from Backes Companies for a **Planned Unit Development and Preliminary Plat** (included) review of the property located west of the Crow River Heights neighborhood, south of Beebe Lake Road, and north of Jandel Avenue NE. An **Environmental Assessment Worksheet (EAW)** has also been prepared and is available for review and comment.

Access to the site is proposed from an extension of both Jasmine Avenue NE, Jordan Avenue NE and Jandel Avenue NE.

Single-family homes are proposed to be constructed, with a total of 159 homes constructed in multiple phases.

The lots included in this plan were graded by the previous developer. Building pads were also previously constructed under a "coving" concept, which staggered the setback of the homes from the street. The developer is intending to utilize the existing work that had been completed on the site, and to install the remaining road and utility infrastructure generally similar to the past plans for the property.

The submitted plans are detailed and show how roads, utilities, and grading are proposed to be constructed. The EAW provides additional information on impacts the development are anticipated to have. The detailed plans and the EAW can be found at www.hanovermn.org.

Process:

The EAW, PUD and Preliminary Plat are currently scheduled to be reviewed at the following meetings:

Planning Commission Public Hearing: **Wednesday, May 23, 2018, at 7:00 p.m.**

City Council Decision: **Tuesday, June 5, 2018, at 7:00 p.m.**

Information / Contacts:

Contact	E-Mail	Phone Number
Cindy Nash, City Planner	cnash@collaborative-planning.com	763-473-0569
Brian Hagen, City Administrator	bhagen@ci.hanover.mn.us	763-497-3777

Follow the development process by reviewing the Crow River Heights project page at www.hanovermn.org!

Collaborative Planning, LLC

MEMORANDUM

TO: Planning Commission

FROM: Cindy Nash, AICP, City Planner

DATE: May 14, 2018

SUBJECT: **Crow River Heights West Future Additions** for (1) Planned Unit Development; and (2) Preliminary Plat

APPLICANT: Backes Companies

LOCATION: Generally located south of Beebe Lake Road, and west of Jasmine Ave NE and Jordan Ave NE.

COMPREHENSIVE PLAN: Neighborhood Residential

Description of Request

The applicant is proposing to plat 159 single-family lots, outlots, and right of way. Preliminary plat approval previously existed for this property, but that preliminary plat expired in 2010. The previous developer had graded much of the property and established the building pads on most of the site. Roads were graded, but utilities were not installed. The current developer is proposing a similar preliminary plat to the one previously approved, but modified as necessary to comply with current ordinance requirements.

This development is requesting the following approvals:

1. Planned Unit Development
2. Preliminary Plat.

The following items are included in the packet for review:

1. City Engineer Comment letter
2. City Planner Comment letter
3. Project Narrative
4. Preliminary Plat and Plan Set

Item 1: Planned Unit Development

Public Hearing: May 23, 2018 Planning Commission

Planned Unit Development (PUD)

The Developer is proposing to construct a 159-lot subdivision that is similar to the previously approved plans from 2000 for the site. The neighborhood to the east of the Subject Property has been developed under the previously approved plans, so the current proposal would be similar to the rest of the existing neighborhood. The property is zoned R-1A.

A PUD is intended to allow for the development of residential areas under a flexible regulatory process that allows for a joint planning design effort by the developer and the City. This process should result in benefits that preserve natural resources and amenities, assure a higher quality living environment, and develop a variety of housing types and densities as a single planned entity. The City may authorize departures from the strict requirements of the underlying zoning district after finding that the proposal is consistent with the Comprehensive Plan, the general purposes of the Zoning Ordinance, and if the project complies with the requirements outlined below (staff comments in italics).

1. The consistency of the proposed PUD with the comprehensive plan.
   Staff Comments: The proposed PUD is consistent with the Comprehensive Plan guidance of Neighborhood Residential (as amended).

2. The extent to which the proposed PUD is designed to form a desirable and unified environment within its own boundaries in terms of relationship of structure and open space, circulation patterns, visual character and sufficiency of drainage and utilities.
   Staff Comments: The proposed PUD consists of two street extensions that are not unified to each other, but rather to the original PUD development that already was constructed. Taken together with the original development, it maintains a unified environment within its own boundaries and with the previous phases.

3. The extent to which the proposed uses will be compatible with present and planned uses in the surround area.
   Staff Comments: The proposed PUD maintains a compatible development pattern with the existing portions of Crow River Heights. Adjustments have been made to the plans previously approved to incorporate more recent ordinance requirements. In the 2000 plan, townhomes were also planned for the site but these have been removed from the current plans and replaced with single-family homes. The original design of the

neighborhood including the coving of front yard setbacks is being maintained.

4. That any exceptions to this article are justified by the design or the development.
   Staff Comments: Exceptions to the standard requirements of the Zoning Ordinance are justified by the design in order to maintain the existing development pattern of the neighborhood. Lot size reductions are appropriate in order to have the non-usable (pond) areas included within outlots rather than lots for better control over what occurs within them.

5. The sufficiency of each planned unit development phase's size, composition, and arrangement in order that its construction, and operation is feasible without dependence upon subsequent phases.
   Staff Comments: No further phases are planned.

6. The burden or impact created by the PUD on parks, schools, streets, and other public facilities and utilities.
   Staff Comments: An Environmental Assessment Worksheet (EAW) has been prepared for the property, which explores these impacts. The EAW is currently under review for public and agency comment.

7. The impact of the PUD on environmental quality and on the reasonable enjoyment of the surrounding properties.
   Staff Comments: The PUD was designed to continue the existing development pattern of the neighborhood in the same manner as previously planned. Staff has reviewed the proposed development plans and find that they are generally in compliance with ordinances as modified by conditions in staff memos, which ordinances are sufficient to protect the environmental quality.

<u>Variances from Zoning Requirements in Planned Unit Developments</u>

The City may vary the regulations of the Zoning Ordinance in PUDs, and the development is requesting the following variations from the standard zoning requirements:

Requirement	Standard Zoning	Variance Requested
Lot Size	12,000 square feet	7,342 square feet
Lot Width (at front setback)	80 feet	70 feet
Corner (Street) Side Yard Setback	30 feet	25 feet

Front Yard Setback	Minimum 30 feet	"Build to" line as specified by lot in plans to complete coving
Rear Yard Setback	30 feet	10 or 20 feet for lots specified in plans

An analysis of why the applicant feels these changes are necessary is included within the narrative.

Staff Recommendation

Staff recommends approving the PUD subject to the conditions below:

1. A Developer's Agreement acceptable to the City is entered into by and between the Developer and the City.

2. Adoption and publication of the ordinance as required by law.

3. All conditions of the City Engineer, City Attorney and City Planner are met.

4. The development must be constructed in substantial conformance with the Site Plans.

5. Single-family homes are the permitted use on the lots.

6. Outlots containing stormwater ponding shall be owned and maintained by the City.

7. The developer must submit foundation as-builts for each home constructed for the review of the Building Official.

8. Each lot is required to have a minimum of two (2) trees per lot and five (5) shrubs per lot, all located within the front yard. All portions of a lot that do not have landscape beds shall be sodded.

9. Variations from the City's Zoning Ordinance requirements are approved as follows:
    a. The lot size is reduced to 7,930 square feet.
    b. The lot width is reduced to 64 feet.
    c. The rear yard setback shall vary as shown on the plans.
    d. The front yard setbacks shall vary as shown on the plans.
    e. The corner side setback shall vary as shown on the plans.

10. All other requirements of the City's Zoning Ordinance not specifically exempted above must be met.

Item 3: Recommendation on Preliminary Plat

Public Hearing: May 23, 2018 Planning Commission

Preliminary plats provide the layout for lots and blocks for future sale and ownership of specific parcels. The preliminary plat is "preliminary", however approval of a preliminary plat gives the property rights by State law.

Land Use

The proposed land use is 159 single-family lots, and outlots for stormwater ponding and trail connections.

Access, Roads, Guest Parking Pedestrian Circulation

Jasmine Avenue NE and Jordan Ave NE are both proposed to be extended. The development is also connecting to Jandel Avenue NE. Additional cul-de-sac streets are also proposed.

A temporary cul-de-sac and easement at the western end of Jasmine Avenue NE will be required, along with a cash security to ensure removal of those temporary cul-de-sacs in the future.

A traffic study was included as part of the Environmental Assessment Worksheet (EAW).

Street names are not being reviewed at this time.

Utilities

Utilities are proposed to be installed within the rights of way.

Ponding is located in outlots that will be deeded to the City. In the past, much of the ponding has been included within the lots.

Wetlands

There are numerous wetlands on the site as shown on the site plans. A portion of the wetlands will be impacted by the project and are proposed to be mitigated on-site in Outlot F.

Park Dedication

Park dedication is required for this plat, and will be calculated at the time of execution of the developers agreement.

Landscaping

Sheets L1-1 through L2-1 contains the proposed landscaping plan. The landscaping plans identify 2 trees and 5 shrubs per lot. In addition, the specific plants called for on each lot could be selected by the homeowner.

Engineering

The development should comply with the requirements of the City Engineers memo.

Staff Recommendation on Preliminary and Final Plat

Staff recommends approving the Preliminary and Final Plat subject to the following conditions to be included in the resolution:

1. All comments contained within the memo from WSB dated May 3, 2018 and the memo from Collaborative Planning dated May 11, 2018 are incorporated herein (collectively referred to as the "Staff Memos").

2. The Subject Property shall be constructed in substantial compliance with the Site Plans as revised to conform to the requirements of the Staff Memos.

3. No construction shall be permitted on the Subject Property until updated Site Plans addressing the comments of the Staff Memos and the conditions of this Resolution are provided for review and approval by the City Engineer and City Planner.

4. To the extent that there are differences or conflicts between the Site Plans and this resolution, the terms of this resolution shall be controlling.

5. A title commitment shall be provided for the review of the City Attorney before the final plat is released for recording.

6. Financial security in a form approved by the City Attorney and in an amount approved by the City Engineer must be provided by the Developer prior to release of the final plat for recording. The Developer's Agreement shall specify the amount of the financial security.

7. The Developer must reimburse the City for all costs incurred by the City and its consultants in relation to review of the proposed development plans as well as the preparation of the Developer's Agreement.

8. Any new utility lines installed to serve the Subject Property are required to be placed underground.

9. The Developer shall be responsible for securing necessary easements and for constructing all streets, utility, trail, stormwater, and other improvements shown on the Approved Construction Plans at their own expense. However, to the extent that such utilities are oversized at the request of the City, the City shall reimburse the Developer for the cost of the extra diameter of the pipe. All reimbursements by the City under this paragraph are subject to the submittal by the Developer of the engineer's estimate and other supporting information as requested by the City. The engineer's estimate will be reviewed by the City to verify that the costs requested for reimbursement are reasonable at the sole determination of the City, and the amount determined by the City to be eligible for reimbursement shall be included within the Developers Agreement.

10. The Developer shall be responsible for obtaining and complying with all necessary permits from the Minnesota Department of Health, DNR, MPCA, and any other governmental agencies prior to commencement of development activities on the site.

11. The Developer shall incorporate the standards and procedures of the Best Management Practices Handbook for site restoration and erosion control measures during the construction process.

12. The Developer must submit details on corrected building pads including compaction tests, limits of the pads and elevations of the excavations. The general soils report for the development must also be submitted to the City Engineer for review and approval prior to the issuance of building permits.

13. Park dedication, sanitary sewer trunk, water trunk, storm sewer trunk and storm warning siren fees shall be paid prior to release of the final plat for recording as per the City fee schedule in effect at the time of the execution of the Developer's Agreement.

14. The Developer shall survey all storm water holding ponds (if any are constructed) as required by the City. The Developer shall be responsible for storm sewer cleaning and holding pond dredging, as required, by the City prior to completion of the development of the Subject Property.

15. Additional conditions as determined necessary by the City Planner, City Engineer, and City Attorney as review of the project progresses and is completed.

178 East 9th Street Suite #200 | St. Paul, MN 55101 | (651) 286-8450

Memorandum

To: ***Cindy Nash – Hanover City Planner***

From: ***Justin Messner, PE – Hanover City Engineer***

Cc: ***Brian Hagen – Hanover City Administrator***
Todd McLouth, PE – Loucks, Inc.

Date: ***May 3, 2018***

Re: ***Crow River Heights West Future Additions Preliminary Plat Review***
WSB Project No. 011855-000

As requested, we have reviewed the Crow River Heights West future additions preliminary plat documents as prepared by Loucks, dated April 20, 2018, and we offer the following comments:

Stormwater Management

General

1. An NPDES General Construction Permit will need to be obtained prior to the start of any construction.
2. An operations and maintenance plan for the proposed stormwater system should be included with future submittals.
3. Owners of private stormwater facilities shall enter into an agreement with the City describing responsibility for the long-term operation and maintenance of the stormwater facilities and shall be executed and recorded with the final plat.

SWMP

1. As stated in the SWMP, due to the clay soils onsite water cannot be infiltrated. Because water is not being infiltrated, volume control requirements are not met and flexible treatment option 2 is pursued by the applicant to meet City water quality requirements. The SWMP should be updated to accurately depict which City requirements the applicant is attempting to meet.
2. The SWMP states the City requires a 55% removal of TP, however the City ordinances state a 60% removal of TP is required for flexible treatment option 2. It appears the applicant will still be meeting water quality requirements, however the reference to City requirements should be updated to be accurate.

Plan Set

1. The City requires that the lowest floor elevation of any structure be at least three feet above the high water elevation. It appears this requirement is not being met around Pond 1, Pond 6, and Outlot 1 Existing Wetland. The applicant should check all proposed structures and update the plans to meet the freeboard requirement.
2. The applicant will need to model and demonstrate all proposed backyard catch basin structures are meeting City freeboard requirements, and if requirements are not being met applicant needs to update plans accordingly.
3. Pretreatment must be provided to discharging into the proposed basins. Applicant should include narrative about how pretreatment will be provided.
4. The NWL should be shown at the inside edge of the filter bench on the filter bench detail, not on the outside edge because the berm will draw down the water level. The 10:1 bench should start at the inside edge of the filter bench and be graded below the NWL. Applicant should update the grading contours and the HydroCAD model as necessary.

5. Smooth out pond corner contours so they are constructible.
6. Slopes and cleanout locations for the proposed drain tile should be included on the utility plan. The MPCA Stormwater Manual recommends a minimum slope of 0.5% for drain tile and at least two cleanouts per drain tile.
7. It is recommended the applicant use MPCA Type C or D biofiltration mix instead of the 70/30 mix for the filtration media for better total phosphorus removal.
8. Riprap is shown at the outlets on the plans however no quantities were provided. Please add riprap quantities to the plans, matching the City's standard plate requirements.
9. A rock construction entrance should be added to the connection with existing Jandel Avenue NE or this entrance should be blocked off.

HydroCAD Model and P8 Model

1. The table below shows the volume that can be drawn down in 48 hours with the proposed filtration benches. It also shows the volume shown in HydroCAD between the filtration bench and the outlet for the ponds. The HydroCAD volumes were interpolated assuming a linear increase between contours. Since the HydroCAD volume is larger than the treatment volume, the filtration bench portion of the pond will not draw down within the allowed 48 hours.

Pond Number	Length of 4' Wide Trench	Volume Treated with 48 hours	Pond volume at filtration bench elevation	Pond volume at outlet elevation	Volume between filtration bench and outlet
	[ft]	[ac-ft]	[ac-ft]	[ac-ft]	[ac-ft]
Pond 1	1137	**0.681**	9.199	10.314	**0.743**
Pond 6	348	**0.208**	1.195	1.698	**0.503**

2. The P8 Model inputs were included in Appendix B of the SWMP, but the P8 Model results were not included. Applicant should include the P8 Model or the modeling results with future submittals.

Preliminary Plan Set

Watermain Comments

1. There is a conflict between the watermain and CBMH 101 (10' depth).

2. There is a conflict between the watermain and CBMH 141 (22' depth).

3. There is a conflict between the watermain and CBMH 147 (11' depth).

4. The curb at the southeast corner of Jordan Ave and Kadler Circle will need to be removed as part of removing the existing hydrant. Continue removing the existing watermain back into the intersection enough to install the new gate valve within the paved roadway.

5. Provide additional gate valves at all intersections.

6. Provide additional hydrants to meet fire protection requirements as well as for flushing, air release, etc.

7. Verify the Hydraulics will work for supporting the entire proposed 'dead-ended' north area with only the 8" watermain from Jasmine Ave NE.

Sanitary Sewer Comments

8. Sanitary structures should be placed on the centerlines of the roadway.

Storm Sewer Comments

9. Storm sewer structures should be a minimum 3.5 feet in depth.

10. There is minimal cover over several storm sewer structures (CBMH 150, CB 140, CB 152, etc.). Provide a minimum of 2.5' cover over storm sewer pipe in the roadway and 2.0' in the green space.

11. Label the FES downstream of CBMH 101.

12. Label the FES downstream of CBMH 147.

13. Increase the easements for the lots adjacent to storm sewer crossings exceeding 10' depth to meet a 1' to 1' ratio including;

    a. CBMH 141 to FES 142 (25'+ deep)

    b. FES 131 to FES 142 (20'+ deep)

    c. CBMH 147 to Outlot C

    d. CBMH 153 to FES 154

    e. CBMH 101 to Outlot H

Grading Plan Comments

14. See attached red-lined plan sheets for locations of grading issues described below.

15. Many of the contours on the plan appear to be automatically generated and do not necessarily make logical sense with how they tie into existing contours and adjacent lots including;

    a. Lot 2,9 Block 13

    b. Lot 3 Block 14

    c. Lots 4,5,19,20 Block 15

16. Several contours are shown directing drainage into house pads including

    a. Lot 4 Block 3

    b. Lots 5,6 Block 5

    c. Lots 2,4,8 Block 7

    d. Lot 6 Block 11

    e. Lots 2,9 Block 13

    f. Lot 16 Block 14

    g. Lot 17 Block 15

17. Several drainage swales are shown running across private property without drainage and utility easements including;

a. Lots 3-18 Block 10

b. Lot 2,9 Block 13

c. Lots 4-14 Block 15

18. Proposed contours do not blend into existing contours in several areas including;

    a. Lots 1-7 Block 11

    b. Blocks 1,2,8,9,11,12

Miscellaneous Comments

19. Install a cul de sac on the west end of Jasmine Avenue NE.

20. Use S-style curb as described in the City of Hanover General Specifications and Detail Plates for Street and Utility Construction

21. Add a utility note that references the current version of the City of Hanover General Specifications and Detail Plates for Street and Utility Construction for utility construction

22. Use the City standard detail plates from the current version of the City of Hanover General Specifications and Detail Plates for Street and Utility Construction

SCALE IN FEET 0 50 100

EXISTING	CIVIL LEGEND	PROPOSED
	SANITARY MANHOLE	
	STORM MANHOLE	
	CATCH BASIN	
	CULVERT	
	HYDRANT	
	GATEVALVE	
	POST INDICATOR VALVE	
	LIGHT POLE	
	POWER POLE	
	SIGN	
	BENCHMARK	
	SOIL BORINGS	
	WATER MANHOLE	
	TELEPHONE MANHOLE	
	UTILITY MANHOLE	
	ELECTRIC MANHOLE	
	WATER SERVICE	
	SANITARY SERVICE	
	HANDICAP PARKING	
	DIRECTION OF FLOW	
	SPOT ELEVATION	
	CONTOURS	
	SANITARY SEWER	
	STORM SEWER	
	WATERMAIN	
	FORCEMAIN	
	DRAINTILE	
	SILT FENCE	
	CURB & GUTTER	
	RETAINING WALL	
	TREELINE	
	EASEMENT LINE	
	SETBACK LINE	
	FENCE LINE	
	UNDERGROUND TELE	
	UNDERGROUND GAS	
	OVERHEAD UTILITY	

CALL BEFORE YOU DIG!
Gopher State One Call
TWIN CITY AREA: 651-454-0002
TOLL FREE: 1-800-252-1166

WARNING:

THE CONTRACTOR SHALL BE RESPONSIBLE FOR CALLING FOR LOCATIONS OF ALL EXISTING UTILITIES. THEY SHALL COOPERATE WITH ALL UTILITY COMPANIES IN MAINTAINING THEIR SERVICE AND / OR RELOCATION OF LINES.

THE CONTRACTOR SHALL CONTACT GOPHER STATE ONE CALL AT 651-454-0002 AT LEAST 48 HOURS IN ADVANCE FOR THE LOCATIONS OF ALL UNDERGROUND WIRES, CABLES, CONDUITS, PIPES, MANHOLES, VALVES OR OTHER BURIED STRUCTURES BEFORE DIGGING. THE CONTRACTOR SHALL REPAIR OR REPLACE THE ABOVE WHEN DAMAGED DURING CONSTRUCTION AT NO COST TO THE OWNER.

CROW RIVER HEIGHTS WEST FUTURE ADD.

HANOVER, MN

BACKES COMPANIES
11413 ASHBURY CIRCLE N.
CHAMPLIN, MN 55316
PHONE: (612) 369-7750
FAX (612) 566-1525

LOUCKS
PLANNING
CIVIL ENGINEERING
LAND SURVEYING
LANDSCAPE ARCHITECTURE
ENVIRONMENTAL
7200 Hemlock Lane, Suite 300
Maple Grove, MN 55369
763.424.5505
www.loucksinc.com

CADD QUALIFICATION

CADD files prepared by the Consultant for this project are instruments of the Consultant's professional services for use solely with respect to this project. These CADD files shall not be used on other projects, for additions to this project, or for completion of this project by others without written approval by the Consultant. With the Consultant's approval, others may be permitted to obtain copies of the CADD drawing files for information and reference only. All intentional or unintentional revisions, additions, or deletions to these CADD files shall be made at the full risk of that party making such revisions, additions or deletions and that party shall hold harmless and indemnify the Consultant from any & all responsibilities, claims, and liabilities.

SUBMITTAL/REVISIONS

04/20/18	CITY SUBMITTAL

PROFESSIONAL SIGNATURE

I hereby certify that this plan, specification or report was prepared by me or under my direct supervision and that I am a duly Licensed Professional Engineer under the laws of the State of Minnesota.

PRELIMINARY

Licensed Name: Todd W. Lidbeck - PE
Date: License No. 20383

QUALITY CONTROL

Loucks Project No.	16101A
Project Lead	TWM
Drawn By	ZHW
Checked By	TWM
Review Date	04/02/18

SHEET INDEX

C0-1	COVER SHEET
C1-1	EXISTING CONDITIONS
C1-2	PRELIMINARY PLAT
C2-0 - C2-2	SITE PLAN
C3-0 - C3-2	GRADING PLAN
C3-3 - C3-5	SWPPP PLAN & NOTES
C4-0 - C4-2	UTILITY PLAN
C8-1 - C8-2	DETAILS
L0-1 - L0-3	TREE PRESERVATION
L0-4	TREE INVENTORY
L1-1 - L1-2	LANDSCAPE PLANS
L2-1	LANDSCAPE DETAILS

NORTH GRADING PLAN

C3-1

Plotted: 04/19/2018 9:36 AM W:\2016\16101A\CADD DATA\CIVIL dwg\Sheet Files\C3-1 GRADING PLAN

EXISTING	CIVIL LEGEND	PROPOSED
	SANITARY MANHOLE	
	STORM MANHOLE	
	CATCH BASIN	
	CULVERT	
	HYDRANT	
	GATEVALVE	
	POST INDICATOR VALVE	
	LIGHT POLE	
	POWER POLE	
	SIGN	
	BENCHMARK	
	SOIL BORINGS	
	WATER MANHOLE	
	TELEPHONE MANHOLE	
	UTILITY MANHOLE	
	ELECTRIC MANHOLE	
	WATER SERVICE	
	SANITARY SERVICE	
	HANDICAP PARKING	
	DIRECTION OF FLOW	
	SPOT ELEVATION	
	CONTOURS	
	SANITARY SEWER	
	STORM SEWER	
	WATERMAIN	
	FORCEMAIN	
	DRAINTILE	
	SILT FENCE	
	CURB & GUTTER	
	RETAINING WALL	
	TREELINE	
	EASEMENT LINE	
	SETBACK LINE	
	FENCE LINE	
	UNDERGROUND TELE	
	UNDERGROUND GAS	
	OVERHEAD UTILITY	

0 50 100
SCALE IN FEET

CALL BEFORE YOU DIG!
Gopher State One Call
TWIN CITY AREA: 651-454-0002
TOLL FREE: 1-800-252-1166

WARNING:

THE CONTRACTOR SHALL BE RESPONSIBLE FOR CALLING FOR LOCATIONS OF ALL EXISTING UTILITIES. THEY SHALL COOPERATE WITH ALL UTILITY COMPANIES IN MAINTAINING THEIR SERVICE AND / OR RELOCATION OF LINES.

THE CONTRACTOR SHALL CONTACT GOPHER STATE ONE CALL AT 651-454-0002 AT LEAST 48 HOURS IN ADVANCE FOR THE LOCATIONS OF ALL UNDERGROUND WIRES, CABLES, CONDUITS, PIPES, MANHOLES, VALVES OR OTHER BURIED STRUCTURES BEFORE DIGGING. THE CONTRACTOR SHALL REPAIR OR REPLACE THE ABOVE WHEN DAMAGED DURING CONSTRUCTION AT NO COST TO THE OWNER.

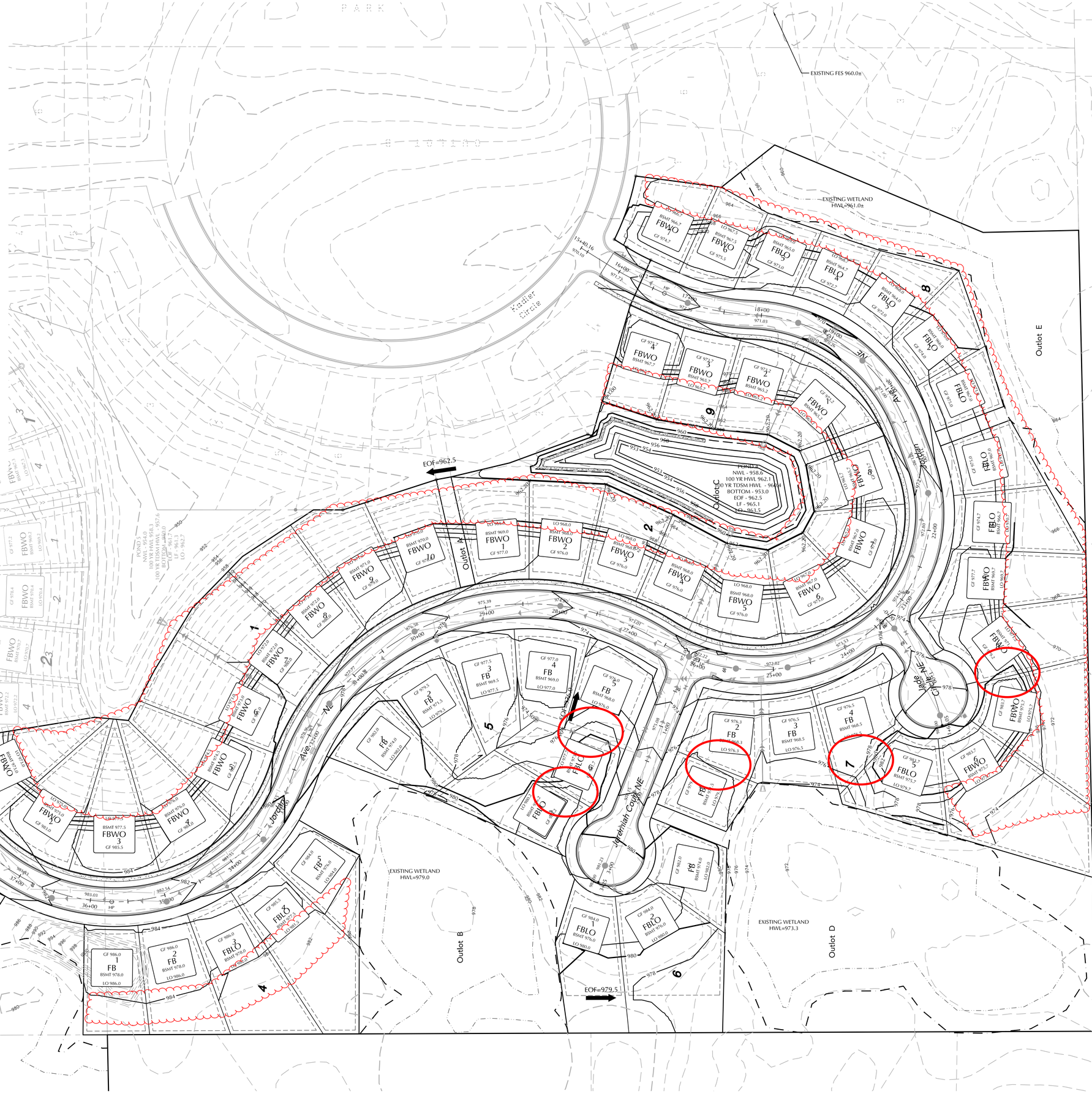

CROW RIVER HEIGHTS WEST FUTURE ADD.
HANOVER, MN

BACKES COMPANIES
11413 ASHBURY CIRCLE N.
CHAMPLIN, MN 55316
PHONE: (612) 369-7750
FAX (612) 566-1525

LOUCKS
PLANNING
CIVIL ENGINEERING
LAND SURVEYING
LANDSCAPE ARCHITECTURE
ENVIRONMENTAL
7200 Hemlock Lane, Suite 300
Maple Grove, MN 55369
763.424.5505
www.loucksinc.com

CADD QUALIFICATION

CADD files prepared by the Consultant for this project are instruments of the Consultant professional services for use solely with respect to this project. These CADD files shall not be used on other projects, for additions to this project, or for completion of this project by others without written approval by the Consultant. With the Consultant's approval, others may be permitted to obtain copies of the CADD drawing files for information and reference only. All intentional or unintentional revisions, additions, or deletions to these CADD files shall be made at the full risk of that party making such revisions, additions or deletions and that party shall hold harmless and indemnify the Consultant from any & all responsibilities, claims, and liabilities.

SUBMITTAL/REVISIONS

04/20/18	CITY SUBMITTAL

PROFESSIONAL SIGNATURE

I hereby certify that this plan, specification or report was prepared by me or under my direct supervision and that I am a duly Licensed Professional Engineer under the laws of the State of Minnesota.

PRELIMINARY

License or Registration Number 20383
Date

QUALITY CONTROL

Loucks Project No.	16101A
Project Lead	TWM
Drawn By	ZHW
Checked By	TWM
Review Date	04/02/18

SHEET INDEX

C0-1	COVER SHEET
C1-1	EXISTING CONDITIONS
C1-2	PRELIMINARY PLAT
C2-0 - C2-2	SITE PLAN
C3-0 - C3-2	GRADING PLAN
C3-3 - C3-5	SWPPP PLAN & NOTES
C4-0 - C4-2	UTILITY PLAN
C8-1 - C8-2	DETAILS
L0-1 - L0-3	TREE PRESERVATION
L0-4	TREE INVENTORY
L1-1 - L1-2	LANDSCAPE PLANS
L2-1	LANDSCAPE DETAILS

SOUTH GRADING PLAN

C3-2

Plotted: 04/19/2018 9:36 AM W:\2016\16101A\CADD DATA\CIVIL dwg Sheet Files\C3-1 GRADING PLAN

PROJECT NARRATIVE

April 20, 2018

Ms. Cindy Nash, City Planner
Hanover Planning Commission
City of Hanover
11250 5th Street NE
Hanover, MN 55341

Re: Application for Preliminary and Residential Planned Unit Development (PUD)
CROW RIVER HEIGHTS WEST – FUTURE ADDITIONS

Dear Ms. Nash and Members of the Planning Commission:

Backes Development is pleased to submit this application for preliminary plat review and PUD of the CROW RIVER HEIGHTS WEST - FUTURE ADDITIONS. This narrative is intended to generally describe the project and address specific development topics.

Development History
The original preliminary plat of Crow River Heights was approved by the City in 2000. It was approved as a PUD with an underlying R1A zoning. The PUD included varied front setbacks and lot area. In 2006 the second phase of the plat was started which included the extension of Jasmine Ave., Jasmine Court and Jordan Ave. Utilities were stubbed for future extension and the site was graded per the preliminary plan for the future streets and lots.

In 2017, Backes Development proposed to complete the remaining lots. The city approved the development of 30 lots - CROW RIVER HEIGHTS WEST 3RD ADDITION. The development consisted of 14 new lots on a westerly extension of Jasmine Ave. and 16 new lots on a westerly extension of Jordan Ave

The CROW RIVER HEIGHTS WEST 3RD ADDITION was approved with a condition of a new EAW submittal for the remaining 160 lots. The EAW has been submitted separately as part of this application.

The preliminary plat shows a total of 159 lots within the total site area of 72 acres, resulting in a density of 2.2 lots per acre.

Location / Current Use
A portion of the site is currently graded with street subcuts and partial ponding areas. The site is vacant and was used partially for agricultural use. There are several wetland basins throughout the site with a grouping of trees in the southwest corner.

Proposed PUD
CRHWA proposes to use the same current underlying zoning requirements for the R1A zone along with a PUD overlay to continue the original planning concept. However, certain ordinances have changed that are incorporated into the proposed plat. (See Table 1 for lot tabulation)

Lot Area
R1A minimum lot area – 12,000 sf

PUD minimum lot area – 7,342 sf
PUD average lot area - 11,968 sf

The impetus for smaller lots are the City's updated stormwater and wetland requirements. The City now requires that all stormwater ponding areas be located within an Outlot. This reduced the backyard areas that were originally extended out into the ponding areas. The proposed outlots encompass the high water level (HWL) so no flooding occurs in the lots. The outlots also provide the City with access to the pond area for maintenance.

The City requires that all wetlands be protected with a 30 foot wetland buffer area. This also reduced backyard areas that extended closer to the wetland edge. The proposed lots do not extend into the wetland buffer area.

Lot Width
R1A minimum width at the front setback - 80 ft

PUD minimum width at the front setback for 55' wide house pad - 75 ft
PUD minimum width at the front setback for 50' wide house pad – 70 ft
PUD side yard setbacks - 10 ft

Front Setback
R1A minimum front setback- 30 ft

PUD minimum front setback- 25 - 45 ft

The original preliminary plat showed a variable front setback based upon a 'coving' concept. In 2006 +/- a portion of the proposed streets were graded according to the preliminary plan. Therefore, a few of the proposed house pads are located with varied front setbacks. In addition, to preserve and provide the 30 foot buffer around the wetlands some of the lot's building pads are pushed forward toward the street.

Rear Setback
R1A minimum rear setback- 30 ft

PUD minimum rear setback- 10 ft

The majority of the lots conform to the 30 foot rear setback. There are lots that require a reduced setback. The impetus for smaller rear setbacks are to allow for the Outlots to encompass the stormwater ponding and to provide the 30 foot wetland buffer area.

All of the lots have at least 10 feet from the back of the building pad to the rear setback line to provide space for a deck or patio. The majority of these lots are all full-basement walkouts. A deck will most likely be level with the main floor – above ground -to allow access underneath it to the lowest walk-out entry. Therefore, the deck will not cover any backyard area, nor hinder any usage of the backyard area giving full use of the rear green space.

Side Setback
R1A minimum side setback – 10 ft

PUD minimum side setback – 10 ft

R1A minimum street side setback – 30 ft

PUD minimum street side setback – 25 ft

There are a few lots which have a side street setback of 25 feet. This is to provide adequate lot and house pad width.

Table 1

Block	Lot	Area (sf)	Width @ Front Setback	Front Setback	Rear Setback	Side Setback	Side Street Setback	House Pad Width	House Pad Depth
1	1	13167	106	30	30	10	N/A	55	50
	2	13232	107	30	30	10	N/A	55	50
	3	13236	107	30	30	10	N/A	55	50
	4	13459	104	30	30	10	N/A	55	50
	5	13706	97	35	30	10	N/A	55	50
	6	16530	76	35	30	10	N/A	55	50
	7	16226	76	37	30	10	N/A	55	50
	8	15525	77	40	30	10	N/A	55	50
	9	13936	78	43	30	10	N/A	55	50
	10	12385	78	41	30	10	N/A	55	50
2	1	11965	79	30	30	10	N/A	55	50
	2	11476	79	30	30	10	N/A	55	50
	3	11071	79	30	30	10	N/A	55	50
	4	9952	80	30	30	10	N/A	55	50
	5	11784	113	30	30	10	N/A	55	50
	6	11438	112	30	30	10	N/A	55	50
	7	10848	126	25	30	10	N/A	55	50
	8	9219	89	25	20	10	N/A	55	50
3	1	12134	79	45	30	10	N/A	55	50
	2	13556	79	45	30	10	N/A	55	50
	3	14838	79	45	30	10	N/A	55	50
	4	14686	79	45	30	10	N/A	55	50
4	1	11591	75	30	30	10	N/A	55	50
	2	13480	75	30	30	10	N/A	55	50
	3	17092	75	40	30	10	N/A	55	50
	4	19716	75	40	30	10	N/A	55	50
	5	10436	75	30	20	10	N/A	55	50
5	1	11838	98	30	30	10	N/A	55	50
	2	12023	93	30	30	10	N/A	55	50
	3	11441	93	30	30	10	N/A	55	50
	4	10175	93	30	20	10	N/A	55	50
	5	11315	95	30	20	10	25	55	50
	6	10838	86	25	30	10	N/A	55	50
	7	13944	77	25	30	10	N/A	55	50

6	1	14982	71	25	30	10	N/A	50	50
	2	23736	77	25	30	10	N/A	55	50
	3	9720	84	25	10	10	N/A	55	50
7	1	8044	75	25	10	10	N/A	55	50
	2	10111	91	30	10	10	25	55	50
	3	10430	75	30	20	10	N/A	55	50
	4	12362	98	30	10	10	30	55	50
	5	12307	77	25	20	10	N/A	55	50
	6	25873	77	25	30	10	N/A	55	50
	7	18974	77	25	30	10	N/A	55	50
	8	16660	107	25	30	10	N/A	55	50
	9	14432	84	25	30	10	N/A	55	50
	10	12316	75	25	30	10	N/A	55	50
	11	9022	75	25	20	10	N/A	55	50
8	1	7516	70	25	10	10	N/A	50	50
	2	10294	75	25	20	10	N/A	55	50
	3	9889	75	25	20	10	N/A	55	50
	4	7342	75	25	10	10	N/A	55	45
	5	7574	75	25	10	10	N/A	55	45
	6	9039	75	25	20	10	N/A	55	50
	7	10885	97	25	20	10	30	55	50
9	1	10546	121	25	20	10	N/A	55	50
	2	9788	83	25	30	10	N/A	55	50
	3	9563	77	25	30	10	N/A	55	50
	4	9954	77	25	30	10	N/A	55	50
10	1	11490	75	30	30	10	N/A	55	50
	2	12314	75	30	30	10	N/A	55	50
	3	17170	75	30	30	10	N/A	55	50
	4	18589	75	32	30	10	N/A	55	50
	5	12928	75	32	30	10	N/A	55	50
	6	10718	75	30	30	10	N/A	55	50
	7	9750	75	30	30	10	N/A	55	50
	8	9750	75	30	30	10	N/A	55	50
	9	9750	75	30	30	10	N/A	55	50
	10	9750	75	30	30	10	N/A	55	50
	11	9750	75	30	30	10	N/A	55	50
	12	9750	75	30	30	10	N/A	55	50
	13	10195	75	30	30	10	N/A	55	50
	14	11310	75	30	30	10	N/A	55	50
	15	13642	75	30	30	10	N/A	55	50
	16	13141	96	30	20	10	30	55	50
	17	14344	77	30	30	10	N/A	55	50
	18	13964	77	30	30	10	N/A	55	50
	19	16615	77	30	30	10	N/A	55	50

	20	11668	76	30	20	10	N/A	55	50
	21	12462	96	30	20	10	30	55	50
11	1	11344	75	30	30	10	N/A	55	50
	2	10896	75	30	30	10	N/A	55	50
	3	11033	75	30	30	10	N/A	55	50
	4	10802	75	32	30	10	N/A	55	50
	5	10340	75	32	30	10	N/A	55	50
	6	11676	75	30	20	10	30	55	50
	7	10558	75	30	20	10	N/A	55	50
	8	10422	75	30	30	10	N/A	55	50
12	1	9230	70	30	30	10	N/A	50	50
	2	9240	70	30	30	10	N/A	50	50
	3	8795	70	30	20	10	N/A	50	50
	4	9366	75	30	20	10	N/A	55	50
	5	10298	75	30	20	10	N/A	55	50
	6	11125	75	30	30	10	N/A	55	50
	7	11979	75	30	30	10	N/A	55	50
	8	15626	77	30	30	10	N/A	55	50
	9	8649	78	25	10	10	N/A	55	45
13	1	12514	99	25	30	10	25	55	50
	2	9890	90	25	20	10	25	55	50
	3	9409	75	25	30	10	N/A	55	50
	4	9122	75	25	20	10	N/A	55	50
	5	7908	88	25	10	10	N/A	55	45
	6	8580	76	25	20	10	N/A	55	50
	7	8794	75	25	20	10	N/A	55	50
	8	8794	75	25	20	10	N/A	55	50
	9	11201	95	30	20	10	30	55	50
	10	8960	75	30	20	10	N/A	55	50
14	1	9909	75	30	20	10	N/A	55	50
	2	10171	75	30	20	10	N/A	55	50
	3	12118	95	30	30	10	30	55	50
	4	9563	75	30	30	10	N/A	55	50
	5	9928	87	30	20	10	N/A	55	50
	6	9757	88	30	20	10	N/A	55	50
	7	9778	86	30	20	10	N/A	55	50
	8	9315	75	30	20	10	N/A	55	50
	9	11959	136	30	20	10	N/A	55	50
	10	11855	137	30	20	10	N/A	55	50
	11	9130	75	30	20	10	N/A	55	50
	12	9406	75	30	20	10	N/A	55	50
	13	9734	75	30	20	10	N/A	55	50
	14	9951	75	30	30	10	N/A	55	50
	15	10611	75	30	30	10	N/A	55	50

	16	13145	95	25	30	10	30	55	50
	17	10807	106	25	30	10	N/A	55	50
	18	9446	75	25	20	10	N/A	55	50
	19	8773	70	25	20	10	N/A	50	50
	20	9199	75	25	20	10	N/A	55	50
	21	9531	75	25	30	10	N/A	55	50
	22	11622	95	25	30	10	30	55	50
	23	10080	75	30	20	10	N/A	55	50
15	1	17544	80	30	30	10	N/A	55	50
	2	14281	80	30	30	10	N/A	55	50
	3	15284	114	30	30	10	45	55	50
	4	11671	95	30	20	10	30	55	50
	5	10254	75	30	30	10	N/A	55	50
	6	11818	75	30	30	10	N/A	55	50
	7	16244	70	30	30	10	N/A	50	50
	8	13483	71	30	30	10	N/A	50	50
	9	11222	75	30	30	10	N/A	55	50
	10	11777	75	30	30	10	N/A	55	50
	11	16767	75	30	30	10	N/A	55	50
	12	21468	75	30	30	10	N/A	55	50
	13	14738	77	30	30	10	N/A	55	50
	14	19994	77	30	30	10	N/A	55	50
	15	14730	77	30	30	10	N/A	55	50
	16	15387	76	30	30	10	N/A	55	50
	17	16473	166	30	20	10	N/A	55	50
	18	10093	75	30	30	10	N/A	55	50
	19	9134	75	30	20	10	N/A	55	50
	20	12387	102	30	20	10	N/A	55	50
	21	10312	81	30	30	10	N/A	55	50
	22	10478	78	30	30	10	N/A	55	50
	23	10328	78	30	30	10	N/A	55	50
	24	11006	78	30	30	10	N/A	55	50
	25	11356	78	30	30	10	N/A	55	50
	26	11394	78	30	30	10	N/A	55	50
16	1	12712	106	30	20	10	40	55	50
	2	11877	75	30	30	10	N/A	55	50
	3	17538	75	30	30	10	N/A	55	50

Wetlands

There are intermittent wetlands on the site. The wetlands have been delineated by Kjolhaug Environmental. The final wetland locations have been reviewed and approved by the Technical Evaluation Panel (TEP). Wetland impacts are proposed.

A meeting was held at the City on March 2, 2018 to discuss the wetland impacts. Representatives from the City, Kjolhaug, the TEP and the developer were in attendance. It

was mutually agreed that the small isolated wetlands have little value and even if saved would ultimately be impacted by any surrounding development. It was stressed that the larger wetland areas should be saved.

The proposed plan shows that the small wetland areas are to be impacted. The larger wetland areas are not impacted and preserved. These large wetland areas are shown with a 30 foot buffer area which are not impacted. The entire buffer and wetland area is encompassed by Outlots which will be dedicated to the City. An access is provided from these Outlots to the adjacent street right-of-way for maintenance purposes.

Total wetland area on site – 267,156 sf
Total wetland impact – 24,901 sf
Wetland mitigation – 49,802 sf

Wetland mitigation is proposed to be on-site creation of wetlands.

Cul-De-Sac Streets
Maximum cul-de-sac length – 500 ft

PUD maximum cul-de-sac length – 664 ft

Jandel Cove is a cul-de-sac street which provides access to a land-locked area in the far southwest corner of the site. This area is surrounded by the City of St. Michael along the west side; the existing WHITETAIL PRESERVE development along the south side and the extension of Jandel Ave. along the east side. To provide access to the available developable land the cul-de-sac is 664 feet in length.

Intended Market
The anticipated sale prices of the homes are $325,000 – 375,000, which serves a medium family household income market.

City Goals
If approved, the proposed project will proceed as a PUD housing development intent on accomplishing the following goals:

- Continue the previously approved plat in conformance with current regulations.
- Utilize existing infrastructure including graded house pads; water and sanitary sewer stubs and street extensions.
- Protect the wetland on site with buffers
- Keep ponds and wetlands/buffers out of the lots to have city control of their maintenance and function.
- Develop residential property that is harmonious to the surrounding area and grows the city tax base.

Thank you for considering this development project. We look forward to your recommendations and approvals.

Dennis "Buck" Backes
Backes Development

CROW RIVER HEIGHTS WEST

FUTURE ADDITIONS

HANOVER, MINNESOTA

PRELIMINARY PLANS FOR:
SITE GRADING, SANITARY SEWER, WATERMAIN,
STORM SEWER AND STREET CONSTRUCTION

VICINITY MAP

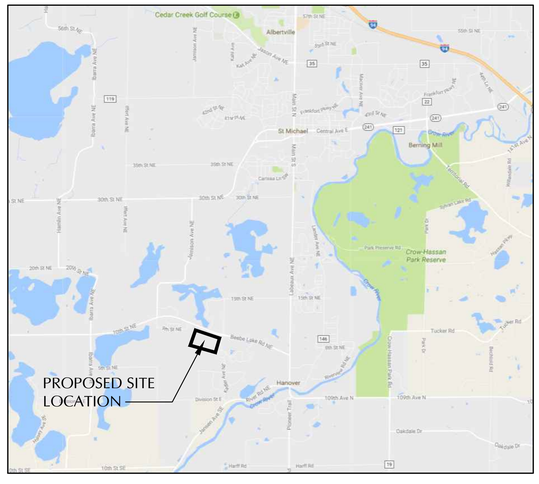

WARNING:

THE CONTRACTOR SHALL BE RESPONSIBLE FOR CALLING FOR LOCATIONS OF ALL EXISTING UTILITIES. THEY SHALL COOPERATE WITH ALL UTILITY COMPANIES IN MAINTAINING THEIR SERVICE AND / OR RELOCATION OF LINES.

THE CONTRACTOR SHALL CONTACT GOPHER STATE ONE CALL AT 651-454-0002 AT LEAST 48 HOURS IN ADVANCE FOR THE LOCATIONS OF ALL UNDERGROUND WIRES, CABLES, CONDUITS, PIPES, MANHOLES, VALVES OR OTHER BURIED STRUCTURES BEFORE DIGGING. THE CONTRACTOR SHALL REPAIR OR REPLACE THE ABOVE WHEN DAMAGED DURING CONSTRUCTION AT NO COST TO THE OWNER.

DEVELOPER

BACKES DEVELOPMENT, LLC
11413 ASHBURY CIRCLE N.
CHAMPLIN, MN 55316

DENNIS BACKES
TEL: 612.369.7750
FAX: 612.566.1525

CALL BEFORE YOU DIG!
Gopher State One Call
TWIN CITY AREA: 651-454-0002
TOLL FREE: 1-800-252-1166

BENCHMARKS

TOP NUT HYDRANT AT END OF JASMINE CT
CUL-DE-SAC, Elevation = 975.48 feet (NGVD1929).

CROW RIVER HEIGHTS WEST FUTURE ADD.
HANOVER, MN

BACKES COMPANIES
11413 ASHBURY CIRCLE N.
CHAMPLIN, MN 55316
PHONE: (612) 369-7750
FAX (612) 566-1525

LOUCKS
PLANNING
CIVIL ENGINEERING
LAND SURVEYING
LANDSCAPE ARCHITECTURE
ENVIRONMENTAL
7200 Hemlock Lane, Suite 300
Maple Grove, MN 55369
763.424.5505
www.loucksinc.com

CADD QUALIFICATION

CADD files prepared by the Consultant for this project are instruments of the Consultant professional services for use solely with respect to this project. These CADD files shall not be used on other projects, for additions to this project, or for completion of this project by others without written approval by the Consultant. Given the inherent instability of CADD files, it is permitted to distribute copies of the CADD drawing files for information and reference only. All intentional or unintentional revisions, additions, or deletions to these CADD files shall be made at the full risk of that party making such revisions, additions or deletions and that party shall hold harmless and indemnify the Consultant from any & all responsibilities, claims, and liabilities.

SUBMITTAL/REVISIONS

04/20/18	CITY SUBMITTAL

PROFESSIONAL SIGNATURE

I hereby certify that this plan, specification or report was prepared by me or under my direct supervision and that I am a duly Licensed Professional Engineer under the laws of the State of Minnesota.

PRELIMINARY

Licensed Professional Engineer: Zachary H. Louth - PE
Date: License No. 20383

QUALITY CONTROL

Loucks Project No.	16101A
Project Lead	TWM
Drawn By	ZHW
Checked By	TWM
Review Date	04/02/18

SHEET INDEX

C0-1	COVER SHEET
C1-1	EXISTING CONDITIONS
C1-2	PRELIMINARY PLAT
C2-0 - C2-2	SITE PLAN
C3-0 - C3-2	GRADING PLAN
C3-3 - C3-5	SWPPP PLAN & NOTES
C4-0 - C4-2	UTILITY PLAN
C8-1 - C8-2	DETAILS
L0-1 - L0-3	TREE PRESERVATION
L0-4	TREE INVENTORY
L1-1 - L1-2	LANDSCAPE PLANS
L2-1	LANDSCAPE DETAILS

COVER SHEET
C0-1

Plotted: 04 /18 / 2018 8:21 AM W:\2016\16101A\CADD DATA\CIVIL_dwg\ Sheet Files\C0-1 COVER SHEET

0 100 200
SCALE IN FEET

SURVEY LEGEND

AS	ASH	CATCH BASIN	STORM SEWER
AP	APPLE	STORM MANHOLE	SANITARY SEWER
BA	BASSWOOD	SANITARY MANHOLE	WATERMAIN
BI	BIRCH	WATER MANHOLE	SANITARY SEWER SERVICE
BO	BOXELDER	HYDRANT	WATER SERVICE
BU	BUCKEYE	GATE VALVE	CULVERT
BS	BUSH	POWER POLE	UNDERGROUND CABLE TV
CA	CATULPA	LIGHT POLE	UNDERGROUND ELECTRIC
CE	CEDAR	YARD LIGHT	UNDERGROUND FIBER OPTIC
CO	COTTONWOOD	GUY WIRE	UNDERGROUND GAS
DE	DEAD TREE	SIGN	UNDERGROUND TELEPHONE
EL	ELM	972.5 SPOT ELEVATION	UNDERGROUND UTILITY
FR	MISC FRUIT	A/C UNIT	OVERHEAD UTILITY
FI	FIR	CABLE TV PEDESTAL	UNDERGROUND TRAFFIC
HA	HACKBERRY	ELECTRIC TRANSFORMER	DRAIN TILE
HI	HICKORY	TELEPHONE PEDESTAL	FORCE MAIN
IR	IRONWOOD	UTILITY PEDESTAL	CHAIN LINK FENCE
LI	LINDEN	ELECTRIC MANHOLE	POST FENCE
LO	LOCUST	GAS VALVE	WOOD FENCE
MA	MAPLE	TELEPHONE MANHOLE	GUARDRAIL
OA	OAK	UTILITY MANHOLE	RETAINING WALL
PA	PALM	ELECTRIC METER	TRAFFIC SIGNAL
PI	PINE	GAS METER	CONCRETE CURB
PO	POPLAR	HAND HOLE	CONCRETE
SP	SPRUCE	ROOF DRAIN	BITUMINOUS
TR	TREE (GEN)	ELECTRIC OUTLET	PAVERS
WA	WALNUT	FIRE CONNECTION	872 CONTOUR
WI	WILLOW	MAILBOX	RAILROAD TRACKS
TC	TOP OF CURB	FLAG POLE	CONIFEROUS TREE
TW	TOP OF WALL	GUARDPOST	DECIDUOUS TREE
THSD	ELEV @ THRESHOLD	MONITORING WELL	
		POST INDICATOR VALVE	WETLAND DELINATION KJOLHAUG ENV. 05/17/18
		SOIL BORING	

CROW RIVER HEIGHTS WEST FUTURE ADD.

HANOVER, MN

BACKES COMPANIES
11413 ASHBURY CIRCLE N.
CHAMPLIN, MN 55316
PHONE: (612) 369-7750
FAX (612) 566-1525

LOUCKS
PLANNING
CIVIL ENGINEERING
LAND SURVEYING
LANDSCAPE ARCHITECTURE
ENVIRONMENTAL
7200 Hemlock Lane, Suite 300
Maple Grove, MN 55369
763.424.5505
www.loucksinc.com

CADD QUALIFICATION

CADD files prepared by the Consultant for this project are instruments of the Consultant's professional services for use solely with respect to this project. These CADD files shall not be used on other projects, for additions to this project, or for completion of this project by others without written approval by the Consultant. Upon request, Consultant will provide copies of the CADD drawing files for information and reference only. All intentional or unintentional revisions, additions, or deletions to these CADD files shall be made at the full risk of that party making such revisions, additions or deletions and that party shall hold harmless and indemnify the Consultant from any & all responsibilities, claims, and liabilities.

SUBMITTAL/REVISIONS

04/20/18 CITY SUBMITTAL

PROFESSIONAL SIGNATURE

I hereby certify that this plan, specification, or report was prepared by me or under my direct supervision and that I am a duly Licensed Professional Engineer under the laws of the State of Minnesota.

PRELIMINARY

Licensed Zachary H. Lounsbury - PE
Date: 20383

QUALITY CONTROL

Loucks Project No.	16101A
Project Lead	TWM
Drawn By	ZHW
Checked By	TWM
Review Date	04/02/18

SHEET INDEX

C0-1	COVER SHEET
C1-1	EXISTING CONDITIONS
C1-2	PRELIMINARY PLAT
C2-0 - C2-2	SITE PLAN
C3-0 - C3-2	GRADING PLAN
C3-3 - C3-5	SWPPP PLAN & NOTES
C4-0 - C4-2	UTILITY PLAN
C8-1 - C8-2	DETAILS
L0-1 - L0-3	TREE PRESERVATION
L0-4	TREE INVENTORY
L1-1 - L1-2	LANDSCAPE PLANS
L2-1	LANDSCAPE DETAILS

CALL BEFORE YOU DIG!
Gopher State One Call
TWIN CITY AREA: 651-454-0002
TOLL FREE: 1-800-252-1166

WARNING:

THE CONTRACTOR SHALL BE RESPONSIBLE FOR CALLING FOR LOCATIONS OF ALL EXISTING UTILITIES. THEY SHALL COOPERATE WITH ALL UTILITY COMPANIES IN MAINTAINING THEIR SERVICE AND / OR RELOCATION OF LINES.

THE CONTRACTOR SHALL CONTACT GOPHER STATE ONE CALL AT 651-454-0002 AT LEAST 48 HOURS IN ADVANCE FOR THE LOCATIONS OF ALL UNDERGROUND WIRES, CABLES, CONDUITS, PIPES, MANHOLES, VALVES OR OTHER BURIED STRUCTURES BEFORE DIGGING. THE CONTRACTOR SHALL REPAIR OR REPLACE THE ABOVE WHEN DAMAGED DURING CONSTRUCTION AT NO COST TO THE OWNER.

EXISTING CONDITIONS

C1-0

Plotted: 04/18/2018 8:22 AM W:\2016\16101A\CADD DATA\CIVIL\ dwg Sheet Files\C1-1 EXISTING CONDITIONS

Preliminary Plat: CROW RIVER HEIGHTS WEST FUTURE ADDITIONS

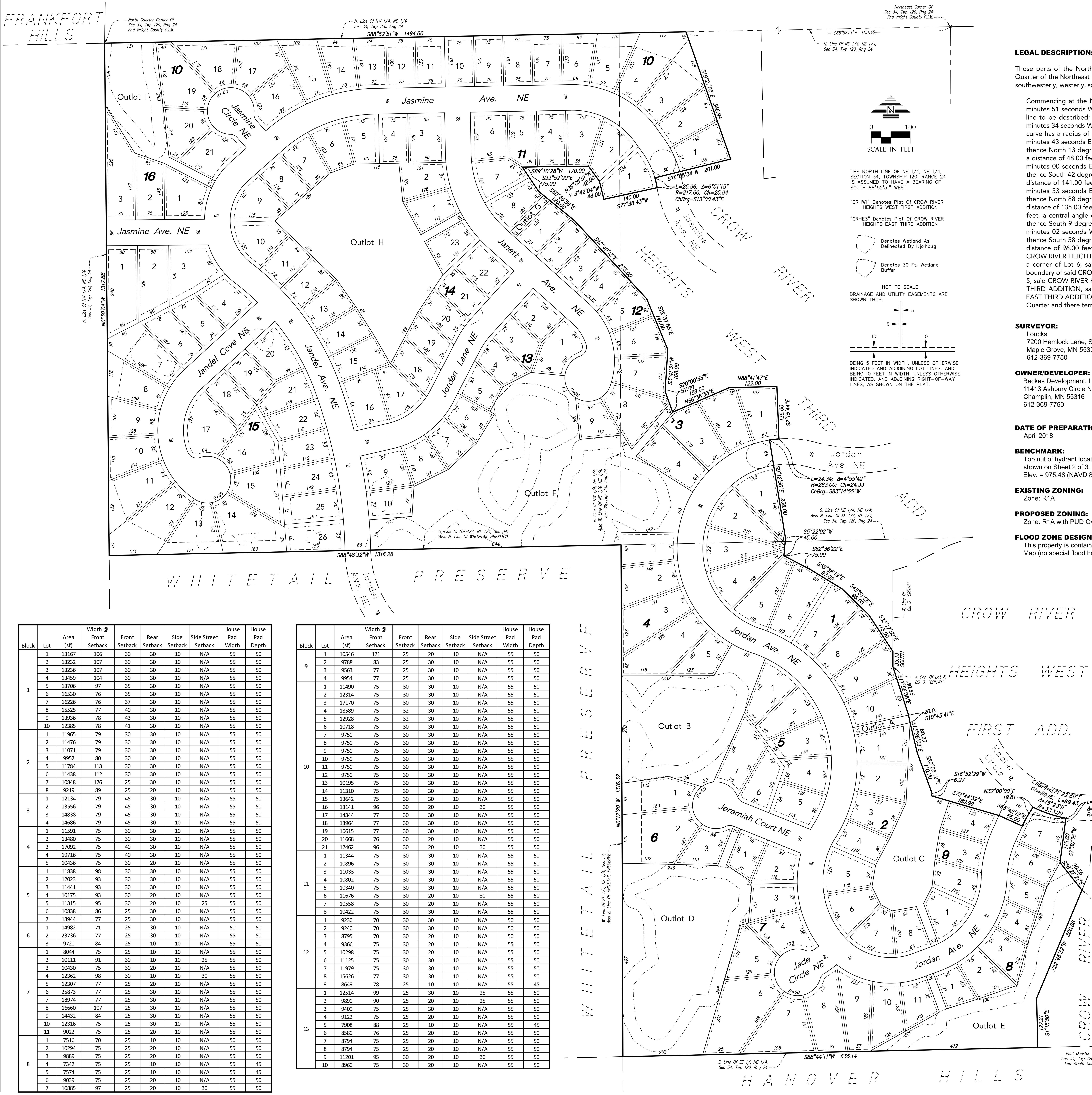

Block	Lot	Area (sf)	Width @ Front Setback	Front Setback	Rear Setback	Side Setback	Side Street Setback	House Pad Width	House Pad Depth
1	1	13167	106	30	30	10	N/A	55	50
	2	13232	107	30	30	10	N/A	55	50
	3	13236	107	30	30	10	N/A	55	50
	4	13459	104	30	30	10	N/A	55	50
	5	13706	97	35	30	10	N/A	55	50
	6	16530	76	35	30	10	N/A	55	50
	7	16226	76	37	30	10	N/A	55	50
	8	15525	77	40	30	10	N/A	55	50
	9	13936	78	43	30	10	N/A	55	50
	10	12385	78	41	30	10	N/A	55	50
2	1	11965	79	30	30	10	N/A	55	50
	2	11476	79	30	30	10	N/A	55	50
	3	11071	79	30	30	10	N/A	55	50
	4	9952	80	30	30	10	N/A	55	50
	5	11784	113	30	30	10	N/A	55	50
	6	11438	112	30	30	10	N/A	55	50
	7	10848	126	25	30	10	N/A	55	50
	8	9219	89	25	20	10	N/A	55	50
3	1	12134	79	45	30	10	N/A	55	50
	2	13556	79	45	30	10	N/A	55	50
	3	14838	79	45	30	10	N/A	55	50
	4	14686	79	45	30	10	N/A	55	50
4	1	11591	75	30	30	10	N/A	55	50
	2	13480	75	30	30	10	N/A	55	50
	3	17092	75	40	30	10	N/A	55	50
	4	19716	75	40	30	10	N/A	55	50
	5	10436	75	30	20	10	N/A	55	50
5	1	11838	98	30	30	10	N/A	55	50
	2	12023	93	30	30	10	N/A	55	50
	3	11441	93	30	30	10	N/A	55	50
	4	10175	93	30	20	10	N/A	55	50
	5	11315	95	30	20	10	25	55	50
	6	10838	86	25	30	10	N/A	55	50
	7	13944	77	25	30	10	N/A	55	50
6	1	14982	71	25	30	10	N/A	50	50
	2	23736	77	25	30	10	N/A	55	50
	3	9720	84	25	10	10	N/A	55	50
7	1	8044	75	25	10	10	N/A	55	50
	2	10111	91	30	10	10	25	55	50
	3	10430	75	30	20	10	N/A	55	50
	4	12362	98	30	10	10	30	55	50
	5	12307	77	25	20	10	N/A	55	50
	6	25873	77	25	30	10	N/A	55	50
	7	18974	77	25	30	10	N/A	55	50
	8	16660	107	25	30	10	N/A	55	50
	9	14432	84	25	30	10	N/A	55	50
	10	12316	75	25	30	10	N/A	55	50
	11	9022	75	25	20	10	N/A	55	50
8	1	7516	70	25	10	10	N/A	50	50
	2	10294	75	25	20	10	N/A	55	50
	3	9889	75	25	20	10	N/A	55	50
	4	7342	75	25	10	10	N/A	55	45
	5	7574	75	25	10	10	N/A	55	45
	6	9039	75	25	20	10	N/A	55	50
	7	10885	97	25	20	10	30	55	50

Block	Lot	Area (sf)	Width @ Front Setback	Front Setback	Rear Setback	Side Setback	Side Street Setback	House Pad Width	House Pad Depth
9	1	10546	121	25	20	10	N/A	55	50
	2	9788	83	25	30	10	N/A	55	50
	3	9563	77	25	30	10	N/A	55	50
	4	9954	77	25	30	10	N/A	55	50
10	1	11490	75	30	30	10	N/A	55	50
	2	12314	75	30	30	10	N/A	55	50
	3	17170	75	30	30	10	N/A	55	50
	4	18589	75	32	30	10	N/A	55	50
	5	12928	75	32	30	10	N/A	55	50
	6	10718	75	30	30	10	N/A	55	50
	7	9750	75	30	30	10	N/A	55	50
	8	9750	75	30	30	10	N/A	55	50
	9	9750	75	30	30	10	N/A	55	50
	10	9750	75	30	30	10	N/A	55	50
	11	9750	75	30	30	10	N/A	55	50
	12	9750	75	30	30	10	N/A	55	50
	13	10195	75	30	30	10	N/A	55	50
	14	11310	75	30	30	10	N/A	55	50
	15	13642	75	30	30	10	N/A	55	50
	16	13141	96	30	20	10	30	55	50
	17	14344	77	30	30	10	N/A	55	50
	18	13964	77	30	30	10	N/A	55	50
	19	16615	77	30	30	10	N/A	55	50
	20	11668	76	30	20	10	N/A	55	50
	21	12462	96	30	20	10	30	55	50
11	1	11344	75	30	30	10	N/A	55	50
	2	10896	75	30	30	10	N/A	55	50
	3	11033	75	30	30	10	N/A	55	50
	4	10802	75	30	30	10	N/A	55	50
	5	10340	75	30	30	10	N/A	55	50
	6	11676	75	30	20	10	30	55	50
	7	10558	75	30	20	10	N/A	55	50
	8	10422	75	30	30	10	N/A	55	50
12	1	9230	70	30	30	10	N/A	50	50
	2	9240	70	30	30	10	N/A	50	50
	3	8795	70	30	20	10	N/A	50	50
	4	9366	75	30	20	10	N/A	55	50
	5	10298	75	30	20	10	N/A	55	50
	6	11125	75	30	30	10	N/A	55	50
	7	11979	75	30	30	10	N/A	55	50
	8	15626	77	30	30	10	N/A	55	50
	9	8649	78	25	10	10	N/A	55	45
13	1	12514	99	25	30	10	25	55	50
	2	9890	90	25	20	10	25	55	50
	3	9409	75	25	30	10	N/A	55	50
	4	9122	75	25	20	10	N/A	55	50
	5	7908	88	25	10	10	N/A	55	45
	6	8580	76	25	20	10	N/A	55	50
	7	8794	75	25	20	10	N/A	55	50
	8	8794	75	25	20	10	N/A	55	50
	9	11201	95	30	20	10	30	55	50
	10	8960	75	30	20	10	N/A	55	50

PRELIMINARY PLAT GENERAL NOTES

LEGAL DESCRIPTION:

Those parts of the Northeast Quarter of the Northeast Quarter, the Northwest Quarter of the Northeast Quarter, and the Southeast Quarter of the Northeast Quarter of Section 34, Township 120 North, Range 24 West, Wright County, Minnesota, lying westerly, northerly, southwesterly, westerly, southwesterly and westerly of the following described line:

Commencing at the Northeast corner of said Northeast Quarter; thence westerly, on an assumed bearing of South 88 degrees 52 minutes 51 seconds West, along the north line of said Northeast Quarter, a distance of 1151.45 feet to the point of beginning of the line to be described; thence South 19 degrees 21 minutes 05 seconds East a distance of 346.94 feet; thence South 76 degree 05 minutes 34 seconds West a distance of 201.00 feet; thence southerly 25.96 feet along a non-tangential curve concave to the west, said curve has a radius of 217.00 feet, a central angle of 6 degrees 51 minutes 15 seconds, and a chord that bears South 13 degrees 00 minutes 43 seconds East; thence South 77 degrees 38 minutes 43 seconds West, not tangent to said curve a distance of 140.00 feet; thence North 13 degrees 42 minutes 04 seconds West a distance of 48.00 feet; thence North 36 degrees 05 minutes 51 seconds West a distance of 48.00 feet; thence South 89 degrees 10 minutes 28 seconds West a distance of 170.00 feet; thence South 33 degrees 52 minutes 00 seconds East a distance of 75.00 feet; thence South 50 degrees 45 minutes 56 seconds East a distance of 120.00 feet; thence South 42 degrees 40 minutes 13 seconds East a distance of 273.00 feet; thence South 22 degrees 37 minutes 55 seconds East a distance of 141.00 feet; thence South 3 degrees 41 minutes 31 seconds West a distance of 108.00 feet; thence South 20 degrees 00 minutes 33 seconds East a distance of 57.00 feet; thence North 66 degrees 36 minutes 33 seconds East a distance of 159.00 feet; thence North 88 degrees 41 minutes 47 seconds East a distance of 122.00 feet; thence South 2 degrees 15 minutes 44 seconds East a distance of 135.00 feet; thence westerly 24.34 feet along a non-tangential curve concave to the south, said curve has a radius of 283.00 feet, a central angle of 4 degrees 55 minutes 42 seconds, and a chord that bears South 83 degrees 14 minutes 55 seconds West; thence South 9 degrees 12 minutes 56 seconds East, not tangent to said curve a distance of 256.00 feet; thence South 5 degrees 22 minutes 02 seconds West a distance of 45.00 feet; thence South 62 degrees 36 minutes 22 seconds East a distance of 75.00 feet; thence South 58 degrees 38 minutes 19 seconds East a distance of 97.00 feet; thence South 45 degrees 51 minutes 28 seconds East a distance of 96.00 feet; thence South 33 degrees 17 minutes 50 seconds East a distance of 113.00 feet to the west line of Block 3, CROW RIVER HEIGHTS WEST FIRST ADDITION, Wright County, Minnesota; thence on a bearing of SOUTH, a distance of 39.13 feet to a corner of Lot 6, said Block 3; thence southeasterly, northeasterly, easterly, southerly and southeasterly, along the southwesterly boundary of said CROW RIVER HEIGHTS WEST FIRST ADDITION, a distance of 945.55 feet to the most southerly corner of Lot 1, Block 5, said CROW RIVER HEIGHTS WEST FIRST ADDITION, which corner is also on the west line of Block 4, CROW RIVER HEIGHTS EAST THIRD ADDITION, said Wright County; thence southwesterly and southerly, along the westerly line of said CROW RIVER HEIGHTS EAST THIRD ADDITION, and said line extended, a distance of 428.09 feet, to the south line of said Southeast Quarter of the Northeast Quarter and there terminating.

SURVEYOR:
Loucks
7200 Hemlock Lane, Suite 300
Maple Grove, MN 55330
612-369-7750

OWNER/DEVELOPER:
Backes Development, LLC
11413 Ashbury Circle N.
Champlin, MN 55316
612-369-7750

DATE OF PREPARATION:
April 2018

BENCHMARK:
Top nut of hydrant located in cul-de-sac of Jasmine Court as shown on Sheet 2 of 3.
Elev. = 975.48 (NAVD 88)

EXISTING ZONING:
Zone: R1A

PROPOSED ZONING:
Zone: R1A with PUD Overlay

FLOOD ZONE DESIGNATION:
This property is contained in an unprinted Flood Insurance Rate Map (no special flood hazard areas).

AREAS:

Proposed Lots =	1,902,756 SF or 43.68 Acres
Proposed Outlot A =	2,938 SF or 0.07 Acres
Proposed Outlot B =	87,377 SF or 2.00 Acres
Proposed Outlot C =	45,233 SF or 1.04 Acres
Proposed Outlot D =	137,323 SF or 3.15 Acres
Proposed Outlot E =	68,170 SF or 1.56 Acres
Proposed Outlot F =	210,356 SF or 4.83 Acres
Proposed Outlot G =	2,594 SF or 0.06 Acres
Proposed Outlot H =	113,041 SF or 2.60 Acres
Proposed Outlot I =	40,859 SF or 0.94 Acres
Proposed R.O.W. =	524,799 SF or 12.05 Acres
Total Property =	3,135,448 SF or 71.98 Aces

PROPOSED BUILDING SETBACKS:

Front	=	25 - 45 Feet Minimum, Varies
Side (Corner)	=	25/30 Feet Minimum, Varies
Side (Interior)	=	10 Feet
Rear	=	10/20/30 Feet Minimum, Varies

PROPOSED LOT DATA:
No. Lots = 159
Minimum Lot Size = 7,342 SF
Average Lot Size = 11,968 SF

WETLANDS:
Wetland Area = 267,156 SF or 6.13 Acres

Block	Lot	Area (sf)	Width @ Front Setback	Front Setback	Rear Setback	Side Setback	Side Street Setback	House Pad Width	House Pad Depth
14	1	9909	75	30	30	10	N/A	55	50
	2	10171	75	30	30	10	N/A	55	50
	3	12118	95	30	30	10	30	55	50
	4	9563	75	30	30	10	N/A	55	50
	5	9928	87	30	20	10	N/A	55	50
	6	9757	88	30	20	10	N/A	55	50
	7	9778	86	30	20	10	N/A	55	50
	8	9315	75	30	20	10	N/A	55	50
	9	11959	136	30	20	10	N/A	55	50
	10	11855	137	30	20	10	N/A	55	50
	11	9130	75	30	20	10	N/A	55	50
	12	9406	75	30	20	10	N/A	55	50
	13	9734	75	30	20	10	N/A	55	50
	14	9951	75	30	30	10	N/A	55	50
	15	10611	75	30	30	10	N/A	55	50
	16	13145	95	25	30	10	30	55	50
	17	10807	106	25	30	10	N/A	55	50
	18	9446	75	25	20	10	N/A	55	50
	19	8773	70	25	20	10	N/A	55	50
	20	9199	75	25	20	10	N/A	55	50
	21	9531	75	25	30	10	N/A	55	50
	22	11622	95	25	30	10	30	55	50
	23	10080	75	30	20	10	N/A	55	50
15	1	17544	80	30	30	10	N/A	55	50
	2	14281	80	30	30	10	N/A	55	50
	3	15284	114	30	30	10	45	55	50
	4	11671	95	30	20	10	30	55	50
	5	10254	75	30	30	10	N/A	55	50
	6	11818	75	30	30	10	N/A	55	50
	7	16244	70	30	30	10	N/A	50	50
	8	13483	71	30	30	10	N/A	50	50
	9	11222	75	30	30	10	N/A	55	50
	10	11777	75	30	30	10	N/A	55	50
	11	16767	75	30	30	10	N/A	55	50
	12	21468	75	30	30	10	N/A	55	50
	13	14738	77	30	30	10	N/A	55	50
	14	19994	77	30	30	10	N/A	55	50
	15	14730	77	30	30	10	N/A	55	50
	16	15387	76	30	30	10	N/A	55	50
	17	16473	166	30	20	10	N/A	55	50
	18	10093	75	30	30	10	N/A	55	50
	19	9134	75	30	20	10	N/A	55	50
	20	12387	102	30	20	10	N/A	55	50
	21	10312	81	30	30	10	N/A	55	50
	22	10478	78	30	30	10	N/A	55	50
	23	10328	78	30	30	10	N/A	55	50
	24	11006	78	30	30	10	N/A	55	50
	25	11356	78	30	30	10	N/A	55	50
	26	11394	78	30	30	10	N/A	55	50
16	1	12712	106	30	20	10	40	55	50
	2	11877	75	30	30	10	N/A	55	50
	3	17538	75	30	30	10	N/A	55	50

CROW RIVER HEIGHTS WEST FUTURE ADD.
HANOVER, MN

BACKES COMPANIES
11413 ASHBURY CIRCLE N.
CHAMPLIN, MN 55316
PHONE: (612) 369-7750
FAX (612) 566-1525

LOUCKS
PLANNING
CIVIL ENGINEERING
LAND SURVEYING
LANDSCAPE ARCHITECTURE
ENVIRONMENTAL
7200 Hemlock Lane, Suite 300
Maple Grove, MN 55369
763.424.5505
www.loucksinc.com

CADD QUALIFICATION

CADD files prepared by the Consultant for this project are instruments of the Consultant professional services for use solely with respect to this project. These CADD files shall not be used on other projects, for additions to this project, or for completion of this project by others without written approval by the Consultant. With the Consultant's approval, others may be permitted to obtain copies of the CADD drawing files for information and reference only. All intentional or unintentional revisions, additions, or deletions to these CADD files shall be made at the full risk of that party making such revisions, additions or deletions and that party shall hold harmless and indemnify the Consultant from any & all responsibilities, claims, and liabilities.

SUBMITTAL/REVISIONS

04/20/18 CITY SUBMITTAL

PROFESSIONAL SIGNATURE

I hereby certify that this survey, plan or report was prepared by me or under my direct supervision and that I am a duly Licensed Land Surveyor under the laws of the State of Minnesota.

Henry D. Nelson - PLS
License No. 17255
Date 4/2/18

QUALITY CONTROL

Loucks Project No.	16-101.AA
Project Lead	HDN
Drawn By	SFM
Checked By	HDN
Field Crew	DP/GF

SHEET INDEX

C0-1 COVER SHEET
C1-1 EXISTING CONDITIONS
C1-2 PRELIMINARY PLAT
C2-0 - C2-2 SITE PLAN
C3-0 - C3-2 GRADING PLAN
C3-3 - C3-5 SWPPP PLAN & NOTES
C4-0 - C4-2 UTILITY PLAN
C8-1 - C8-2 DETAILS

PRELIMINARY PLAT

Plotted: 04 /17 / 2018 9:40 AM W:\2016\16101A\CADD DATA\SURVEY_dwg Sheet Files\P16101A-PrePlat

N

0 100 200

SCALE IN FEET

EXISTING	CIVIL LEGEND	PROPOSED
	SANITARY MANHOLE	
	STORM MANHOLE	
	CATCH BASIN	
	CULVERT	
	HYDRANT	
	GATEVALVE	
	POST INDICATOR VALVE	
	LIGHT POLE	
	POWER POLE	
	SIGN	
	BENCHMARK	
	SOIL BORINGS	
	WATER MANHOLE	
	TELEPHONE MANHOLE	
	UTILITY MANHOLE	
	ELECTRIC MANHOLE	
	WATER SERVICE	
	SANITARY SERVICE	
	HANDICAP PARKING	
	DIRECTION OF FLOW	
	SPOT ELEVATION	
	CONTOURS	
	SANITARY SEWER	
	STORM SEWER	
	WATERMAIN	
	FORCEMAIN	
	DRAINTILE	
	SILT FENCE	
	CURB & GUTTER	
	RETAINING WALL	
	TREELINE	
	EASEMENT LINE	
	SETBACK LINE	
	FENCE LINE	
	UNDERGROUND TELE	
	UNDERGROUND GAS	
	OVERHEAD UTILITY	

CROW RIVER HEIGHTS WEST FUTURE ADD.

HANOVER, MN

BACKES COMPANIES
11413 ASHBURY CIRCLE N.
CHAMPLIN, MN 55316
PHONE: (612) 369-7750
FAX (612) 566-1525

LOUCKS
PLANNING
CIVIL ENGINEERING
LAND SURVEYING
LANDSCAPE ARCHITECTURE
ENVIRONMENTAL
7200 Hemlock Lane, Suite 300
Maple Grove, MN 55369
763.424.5505
www.loucksinc.com

WETLANDS

ID #	Area sf	Impact sf	Mitigation sf
1	10,783	0	0
2A	1,712	1,712	3,424
2B	1,600	1,600	3,200
2C	4,153	4,153	8,306
2D	21,766	0	0
2E	40,216	0	0
3	1,276	1,276	2,552
4	18,376	0	0
5	5,981	5,981	11,962
6	39,712	0	0
7	1,014	1,014	2,028
8	2,536	2,536	5,072
10	6,629	6,629	13,258
11	41,815	0	0
12	69,587	0	0

Total Wetland Area = 267,156 sf
Total Wetland Impact = 24,901 sf
Total Mitigation Area= 49,802 sf

CADD QUALIFICATION

CADD files prepared by the Consultant for this project are instruments of the Consultant professional services for use solely with respect to this project. These CADD files shall not be used on other projects, for additions to this project, or for completion of this project by others without written approval by the Consultant. Only the original signature and seal/stamp shall be permitted on obtaining copies of the CADD drawing files for information and reference only. All intentional or unintentional revisions, additions, or deletions to these CADD files shall be made at the full risk of that party making such revisions, additions or deletions and that party shall hold harmless and indemnify the Consultant from any & all responsibilities, claims, and liabilities.

SUBMITTAL/REVISIONS

04/20/18 CITY SUBMITTAL

PROFESSIONAL SIGNATURE

I hereby certify that this plan, specification, or report was prepared by me or under my direct supervision and that I am a duly Licensed Professional Engineer under the laws of the State of Minnesota.

PRELIMINARY

Licensed Professional Engineer: Tyler W. McLouth - PE
Date: License No. 20383

QUALITY CONTROL

Loucks Project No.	16101A
Project Lead	TWM
Drawn By	ZHW
Checked By	TWM
Review Date	04/02/18

SHEET INDEX

C0-1	COVER SHEET
C1-1	EXISTING CONDITIONS
C1-2	PRELIMINARY PLAT
C2-0 - C2-2	SITE PLAN
C3-0 - C3-2	GRADING PLAN
C3-3 - C3-5	SWPPP PLAN & NOTES
C4-0 - C4-2	UTILITY PLAN
C8-1 - C8-2	DETAILS
L0-1 - L0-3	TREE PRESERVATION
L0-4	TREE INVENTORY
L1-1 - L1-2	LANDSCAPE PLANS
L2-1	LANDSCAPE DETAILS

CALL BEFORE YOU DIG!
Gopher State One Call
TWIN CITY AREA: 651-454-0002
TOLL FREE: 1-800-252-1166

WARNING:

THE CONTRACTOR SHALL BE RESPONSIBLE FOR CALLING FOR LOCATIONS OF ALL EXISTING UTILITIES. THEY SHALL COOPERATE WITH ALL UTILITY COMPANIES IN MAINTAINING THEIR SERVICE AND / OR RELOCATION OF LINES.

THE CONTRACTOR SHALL CONTACT GOPHER STATE ONE CALL AT 651-454-0002 AT LEAST 48 HOURS IN ADVANCE FOR THE LOCATIONS OF ALL UNDERGROUND WIRES, CABLES, CONDUITS, PIPES, MANHOLES, VALVES OR OTHER BURIED STRUCTURES BEFORE DIGGING. THE CONTRACTOR SHALL REPAIR OR REPLACE THE ABOVE WHEN DAMAGED DURING CONSTRUCTION AT NO COST TO THE OWNER.

OVERALL SITE PLAN

C2-0

Plotted: 04/19/2018 9:35 AM W:\2016\16101A\CADD DATA\CIVIL_dwg Sheet Files\C2-1 SITE PLAN

0 50 100
SCALE IN FEET

EXISTING	CIVIL LEGEND	PROPOSED
	SANITARY MANHOLE	
	STORM MANHOLE	
	CATCH BASIN	
	CULVERT	
	HYDRANT	
	GATEVALVE	
	POST INDICATOR VALVE	
	LIGHT POLE	
	POWER POLE	
	SIGN	
	BENCHMARK	
	SOIL BORINGS	
	WATER MANHOLE	
	TELEPHONE MANHOLE	
	UTILITY MANHOLE	
	ELECTRIC MANHOLE	
	WATER SERVICE	
	SANITARY SERVICE	
	HANDICAP PARKING	
	DIRECTION OF FLOW	
	SPOT ELEVATION	
	CONTOURS	
	SANITARY SEWER	
	STORM SEWER	
	WATERMAIN	
	FORCEMAIN	
	DRAINTILE	
	SILT FENCE	
	CURB & GUTTER	
	RETAINING WALL	
	TREELINE	
	EASEMENT LINE	
	SETBACK LINE	
	FENCE LINE	
	UNDERGROUND TELE	
	UNDERGROUND GAS	
	OVERHEAD UTILITY	

CALL BEFORE YOU DIG!
Gopher State One Call
TWIN CITY AREA: 651-454-0002
TOLL FREE: 1-800-252-1166

WARNING:

THE CONTRACTOR SHALL BE RESPONSIBLE FOR CALLING FOR LOCATIONS OF ALL EXISTING UTILITIES. THEY SHALL COOPERATE WITH ALL UTILITY COMPANIES IN MAINTAINING THEIR SERVICE AND / OR RELOCATION OF LINES.

THE CONTRACTOR SHALL CONTACT GOPHER STATE ONE CALL AT 651-454-0002 AT LEAST 48 HOURS IN ADVANCE FOR THE LOCATIONS OF ALL UNDERGROUND WIRES, CABLES, CONDUITS, PIPES, MANHOLES, VALVES OR OTHER BURIED STRUCTURES BEFORE DIGGING. THE CONTRACTOR SHALL REPAIR OR REPLACE THE ABOVE WHEN DAMAGED DURING CONSTRUCTION AT NO COST TO THE OWNER.

CROW RIVER HEIGHTS WEST FUTURE ADD.

HANOVER, MN

BACKES COMPANIES
11413 ASHBURY CIRCLE N.
CHAMPLIN, MN 55316
PHONE: (612) 369-7750
FAX (612) 566-1525

LOUCKS
PLANNING
CIVIL ENGINEERING
LAND SURVEYING
LANDSCAPE ARCHITECTURE
ENVIRONMENTAL
7200 Hemlock Lane, Suite 300
Maple Grove, MN 55369
763.424.5505
www.loucksinc.com

CADD QUALIFICATION

CADD files prepared by the Consultant for this project are instruments of the Consultant professional services for use solely with respect to this project. These CADD files shall not be used on other projects, for additions to this project, or for completion of this project by others without written approval by the Consultant. With the Consultant's approval, others may be permitted to obtain copies of the CADD drawing files for information and reference only. All intentional or unintentional revisions, additions, or deletions to these CADD files shall be made at the full risk of that party making such revisions, additions or deletions and that party shall hold harmless and indemnify the Consultant from any & all responsibilities, claims, and liabilities.

SUBMITTAL/REVISIONS

04/20/18	CITY SUBMITTAL

PROFESSIONAL SIGNATURE

I hereby certify that this plan, specification, or report was prepared by me or under my direct supervision and that I am a duly Licensed Professional Engineer under the laws of the State of Minnesota.

PRELIMINARY

Licensed McLouth - PE
Date 20383

QUALITY CONTROL

Loucks Project No.	16101A
Project Lead	TWM
Drawn By	ZHW
Checked By	TWM
Review Date	04/02/18

SHEET INDEX

C0-1	COVER SHEET
C1-1	EXISTING CONDITIONS
C1-2	PRELIMINARY PLAT
C2-0 - C2-2	SITE PLAN
C3-0 - C3-2	GRADING PLAN
C3-3 - C3-5	SWPPP PLAN & NOTES
C4-0 - C4-2	UTILITY PLAN
C8-1 - C8-2	DETAILS
L0-1 - L0-3	TREE PRESERVATION
L0-4	TREE INVENTORY
L1-1 - L1-2	LANDSCAPE PLANS
L2-1	LANDSCAPE DETAILS

NORTH SITE PLAN

C2-1

Plotted: 04 /19 / 2018 9:35 AM W:\2016\16101A\CADD DATA\CIVIL\ dwg Sheet File\C2-1 SITE PLAN

EXISTING	CIVIL LEGEND	PROPOSED
	SANITARY MANHOLE	
	STORM MANHOLE	
	CATCH BASIN	
	CULVERT	
	HYDRANT	
	GATEVALVE	
	POST INDICATOR VALVE	
	LIGHT POLE	
	POWER POLE	
	SIGN	
	BENCHMARK	
	SOIL BORINGS	
	WATER MANHOLE	
	TELEPHONE MANHOLE	
	UTILITY MANHOLE	
	ELECTRIC MANHOLE	
	WATER SERVICE	
	SANITARY SERVICE	
	HANDICAP PARKING	
	DIRECTION OF FLOW	
	SPOT ELEVATION	
	CONTOURS	
	SANTARY SEWER	
	STORM SEWER	
	WATERMAIN	
	FORCEMAIN	
	DRAINTILE	
	SILT FENCE	
	CURB & GUTTER	
	RETAINING WALL	
	TREELINE	
	EASEMENT LINE	
	SETBACK LINE	
	FENCE LINE	
	UNDERGROUND TELE	
	UNDERGROUND GAS	
	OVERHEAD UTILITY	

0 50 100
SCALE IN FEET

CALL BEFORE YOU DIG!
Gopher State One Call
TWIN CITY AREA: 651-454-0002
TOLL FREE: 1-800-252-1166

WARNING:

THE CONTRACTOR SHALL BE RESPONSIBLE FOR CALLING FOR LOCATIONS OF ALL EXISTING UTILITIES. THEY SHALL COOPERATE WITH ALL UTILITY COMPANIES IN MAINTAINING THEIR SERVICE AND / OR RELOCATION OF LINES.

THE CONTRACTOR SHALL CONTACT GOPHER STATE ONE CALL AT 651-454-0002 AT LEAST 48 HOURS IN ADVANCE FOR THE LOCATIONS OF ALL UNDERGROUND WIRES, CABLES, CONDUITS, PIPES, MANHOLES, VALVES OR OTHER BURIED STRUCTURES BEFORE DIGGING. THE CONTRACTOR SHALL REPAIR OR REPLACE THE ABOVE WHEN DAMAGED DURING CONSTRUCTION AT NO COST TO THE OWNER.

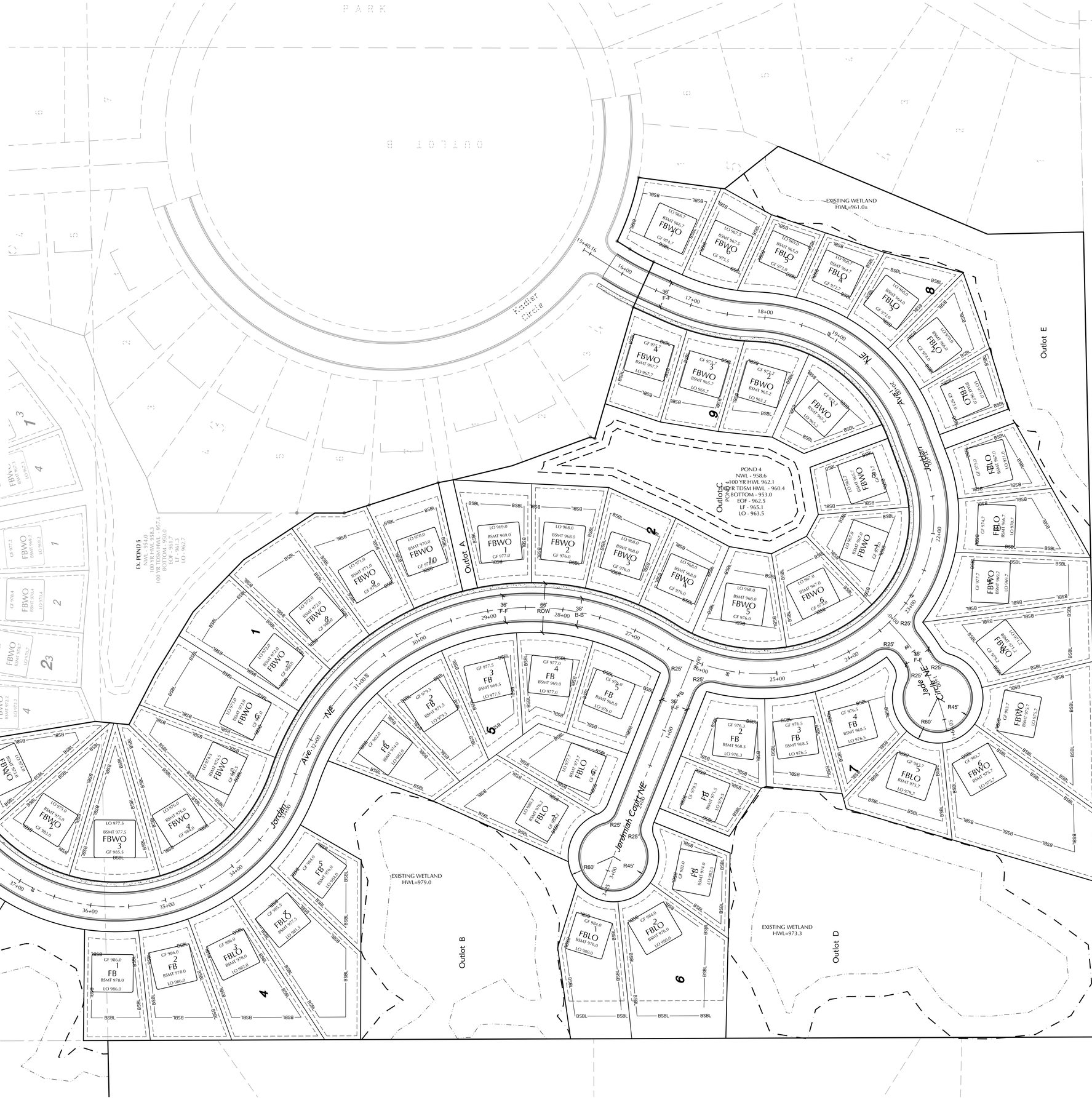

CROW RIVER HEIGHTS WEST FUTURE ADD.
HANOVER, MN

BACKES COMPANIES
11413 ASHBURY CIRCLE N.
CHAMPLIN, MN 55316
PHONE: (612) 369-7750
FAX (612) 566-1525

LOUCKS
PLANNING
CIVIL ENGINEERING
LAND SURVEYING
LANDSCAPE ARCHITECTURE
ENVIRONMENTAL
7200 Hemlock Lane, Suite 300
Maple Grove, MN 55369
763.424.5505
www.loucksinc.com

CADD QUALIFICATION

CADD files prepared by the Consultant for this project are instruments of the Consultant professional services for use solely with respect to this project. These CADD files shall not be used on other projects, for additions to this project, or for completion of this project by others without written approval by the Consultant. With the Consultant's approval, others may be permitted to obtain copies of the CADD drawing files for information and reference only. All intentional or unintentional revisions, additions, or deletions to these CADD files shall be made at the full risk of that party making such revisions, additions or deletions and that party shall hold harmless and indemnify the Consultant from any & all responsibilities, claims, and liabilities.

SUBMITTAL/REVISIONS

04/20/18	CITY SUBMITTAL

PROFESSIONAL SIGNATURE

I hereby certify that this plan, specification or report was prepared by me or under my direct supervision and that I am a duly Licensed Professional Engineer under the laws of the State of Minnesota.

PRELIMINARY

License Number 20383
Date

QUALITY CONTROL

Loucks Project No.	16101A
Project Lead	TWM
Drawn By	ZHW
Checked By	TWM
Review Date	04/02/18

SHEET INDEX

C0-1	COVER SHEET
C1-1	EXISTING CONDITIONS
C1-2	PRELIMINARY PLAT
C2-0 - C2-2	SITE PLAN
C3-0 - C3-2	GRADING PLAN
C3-3 - C3-5	SWPPP PLAN & NOTES
C4-0 - C4-2	UTILITY PLAN
C8-1 - C8-2	DETAILS
L0-1 - L0-3	TREE PRESERVATION
L0-4	TREE INVENTORY
L1-1 - L1-2	LANDSCAPE PLANS
L2-1	LANDSCAPE DETAILS

SOUTH SITE PLAN

C2-2

Plotted: 04/19/2018 9:35 AM W:\2016\16101A\CADD DATA\CIVIL\ dwg Sheet Files\C2-1 SITE PLAN

Plotted: 04 /19 / 2018 9:36 AM W:\2016\16101A\CADD DATA\CIVIL_dwg Sheet Files\C3-1 GRADING PLAN

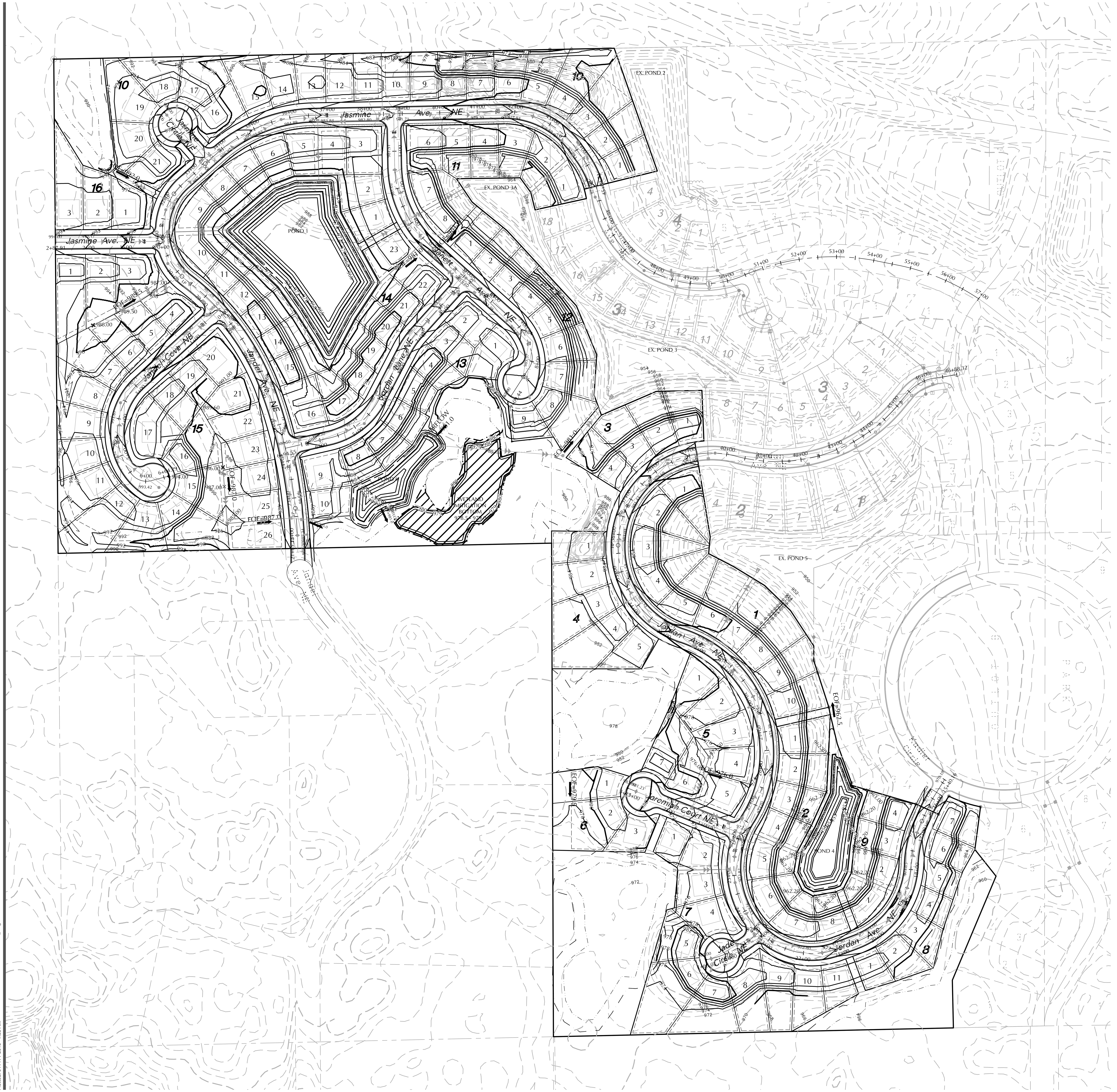

0 100 200
SCALE IN FEET

EXISTING	CIVIL LEGEND	PROPOSED
	SANITARY MANHOLE	
	STORM MANHOLE	
	CATCH BASIN	
	CULVERT	
	HYDRANT	
	GATEVALVE	
	POST INDICATOR VALVE	
	LIGHT POLE	
	POWER POLE	
	SIGN	
	BENCHMARK	
	SOIL BORINGS	
	WATER MANHOLE	
	TELEPHONE MANHOLE	
	UTILITY MANHOLE	
	ELECTRIC MANHOLE	
	WATER SERVICE	
	SANITARY SERVICE	
	HANDICAP PARKING	
	DIRECTION OF FLOW	
	SPOT ELEVATION	
	CONTOURS	
	SANITARY SEWER	
	STORM SEWER	
	WATERMAIN	
	FORCEMAIN	
	DRAINTILE	
	SILT FENCE	
	CURB & GUTTER	
	RETAINING WALL	
	TREELINE	
	EASEMENT LINE	
	SETBACK LINE	
	FENCE LINE	
	UNDERGROUND TELE	
	UNDERGROUND GAS	
	OVERHEAD UTILITY	

CROW RIVER HEIGHTS WEST FUTURE ADD.

HANOVER, MN

BACKES COMPANIES
11413 ASHBURY CIRCLE N.
CHAMPLIN, MN 55316
PHONE: (612) 369-7750
FAX (612) 566-1525

LOUCKS
PLANNING
CIVIL ENGINEERING
LAND SURVEYING
LANDSCAPE ARCHITECTURE
ENVIRONMENTAL

7200 Hemlock Lane, Suite 300
Maple Grove, MN 55369
763.424.5505
www.loucksinc.com

CADD QUALIFICATION

CADD files prepared by the Consultant for this project are instruments of the Consultant professional services for use solely with respect to this project. These CADD files shall not be used on other projects, for additions to this project, or for completion of this project by others without written approval by the Consultant. With the Consultant's approval, others may be permitted to obtain copies of the CADD drawing files for information and reference only. All intentional or unintentional revisions, additions, or deletions to these CADD files shall be made at the full risk of that party making such revisions, additions or deletions and that party shall hold harmless and indemnify the Consultant from any & all responsibilities, claims, and liabilities.

SUBMITTAL/REVISIONS

04/20/18 CITY SUBMITTAL

PROFESSIONAL SIGNATURE

I hereby certify that this plan, specification or report was prepared by me or under my direct supervision and that I am a duly Licensed Professional Engineer under the laws of the State of Minnesota.

PRELIMINARY

License No. 20383
Date

QUALITY CONTROL

Loucks Project No.	16101A
Project Lead	TWM
Drawn By	ZHW
Checked By	TWM
Review Date	04/02/18

SHEET INDEX

C0-1	COVER SHEET
C1-1	EXISTING CONDITIONS
C1-2	PRELIMINARY PLAT
C2-0 - C2-2	SITE PLAN
C3-0 - C3-2	GRADING PLAN
C3-3 - C3-5	SWPPP PLAN & NOTES
C4-0 - C4-2	UTILITY PLAN
C8-1 - C8-2	DETAILS
L0-1 - L0-3	TREE PRESERVATION
L0-4	TREE INVENTORY
L1-1 - L1-2	LANDSCAPE PLANS
L2-1	LANDSCAPE DETAILS

CALL BEFORE YOU DIG!
Gopher State One Call
TWIN CITY AREA: 651-454-0002
TOLL FREE: 1-800-252-1166

WARNING:

THE CONTRACTOR SHALL BE RESPONSIBLE FOR CALLING FOR LOCATIONS OF ALL EXISTING UTILITIES. THEY SHALL COOPERATE WITH ALL UTILITY COMPANIES IN MAINTAINING THEIR SERVICE AND / OR RELOCATION OF LINES.

THE CONTRACTOR SHALL CONTACT GOPHER STATE ONE CALL AT 651-454-0002 AT LEAST 48 HOURS IN ADVANCE FOR THE LOCATIONS OF ALL UNDERGROUND WIRES, CABLES, CONDUITS, PIPES, MANHOLES, VALVES OR OTHER BURIED STRUCTURES BEFORE DIGGING. THE CONTRACTOR SHALL REPAIR OR REPLACE THE ABOVE WHEN DAMAGED DURING CONSTRUCTION AT NO COST TO THE OWNER.

OVERALL GRADING PLAN

C3-0

CALL BEFORE YOU DIG!

Gopher State One Call

TWIN CITY AREA: 651-454-0002
TOLL FREE: 1-800-252-1166

WARNING:

THE CONTRACTOR SHALL BE RESPONSIBLE FOR CALLING FOR LOCATIONS OF ALL EXISTING UTILITIES. THEY SHALL COOPERATE WITH ALL UTILITY COMPANIES IN MAINTAINING THEIR SERVICE AND / OR RELOCATION OF LINES.

THE CONTRACTOR SHALL CONTACT GOPHER STATE ONE CALL AT 651-454-0002 AT LEAST 48 HOURS IN ADVANCE FOR THE LOCATIONS OF ALL UNDERGROUND WIRES, CABLES, CONDUITS, PIPES, MANHOLES, VALVES OR OTHER BURIED STRUCTURES BEFORE DIGGING. THE CONTRACTOR SHALL REPAIR OR REPLACE THE ABOVE WHEN DAMAGED DURING CONSTRUCTION AT NO COST TO THE OWNER.

N

0 50 100
SCALE IN FEET

EXISTING	CIVIL LEGEND	PROPOSED
	SANITARY MANHOLE	
	STORM MANHOLE	
	CATCH BASIN	
	CULVERT	
	HYDRANT	
	GATEVALVE	
PIV	POST INDICATOR VALVE	PIV
	LIGHT POLE	
	POWER POLE	
	SIGN	
BM #3	BENCHMARK	
B-	SOIL BORINGS	B-
	WATER MANHOLE	
	TELEPHONE MANHOLE	
	UTILITY MANHOLE	
	ELECTRIC MANHOLE	
W	WATER SERVICE	
S	SANITARY SERVICE	
	HANDICAP PARKING	
1.0%	DIRECTION OF FLOW	1.0%
924.6	SPOT ELEVATION	924.6
924	CONTOURS	924
	SANITARY SEWER	
	STORM SEWER	
	WATERMAIN	
FM	FORCEMAIN	FM
DT	DRAINTILE	DT
	SILT FENCE	
	CURB & GUTTER	
	RETAINING WALL	
	TREELINE	
	EASEMENT LINE	
	SETBACK LINE	
X	FENCE LINE	X
TEL	UNDERGROUND TELE	
GAS	UNDERGROUND GAS	
OH	OVERHEAD UTILITY	

CROW RIVER HEIGHTS WEST FUTURE ADD.

HANOVER, MN

BACKES COMPANIES
11413 ASHBURY CIRCLE N.
CHAMPLIN, MN 55316
PHONE: (612) 369-7750
FAX (612) 566-1525

LOUCKS
PLANNING
CIVIL ENGINEERING
LAND SURVEYING
LANDSCAPE ARCHITECTURE
ENVIRONMENTAL
7200 Hemlock Lane, Suite 300
Maple Grove, MN 55369
763.424.5505
www.loucksinc.com

CADD QUALIFICATION

CADD files prepared by the Consultant for this project are instruments of the Consultant professional services for use solely with respect to this project. These CADD files shall not be used on other projects, for additions to this project, or for completion of this project by others without written approval by the Consultant. With the Consultant's approval, others may be permitted to obtain copies of the CADD drawing files for information and reference only. All intentional or unintentional revisions, additions, or deletions to these CADD files shall be made at the full risk of that party making such revisions, additions or deletions and that party shall hold harmless and indemnify the Consultant from any & all responsibilities, claims, and liabilities.

SUBMITTAL/REVISIONS

04/20/18 CITY SUBMITTAL

PROFESSIONAL SIGNATURE

I hereby certify that this plan, specification or report was prepared by me or under my direct supervision and that I am a duly Licensed Professional Engineer under the laws of the State of Minnesota.

PRELIMINARY

License No. ... W. McLouth - PE 20383
Date

QUALITY CONTROL

Loucks Project No.	16101A
Project Lead	TWM
Drawn By	ZHW
Checked By	TWM
Review Date	04/02/18

SHEET INDEX

C0-1	COVER SHEET
C1-1	EXISTING CONDITIONS
C1-2	PRELIMINARY PLAT
C2-0 - C2-2	SITE PLAN
C3-0 - C3-2	GRADING PLAN
C3-3 - C3-5	SWPPP PLAN & NOTES
C4-0 - C4-2	UTILITY PLAN
C8-1 - C8-2	DETAILS
L0-1 - L0-3	TREE PRESERVATION
L0-4	TREE INVENTORY
L1-1 - L1-2	LANDSCAPE PLANS
L2-1	LANDSCAPE DETAILS

NORTH GRADING PLAN

C3-1

Plotted: 04 /19 / 2018 9:36 AM W:\2016\16101A\CADD DATA\CIVIL_dwg Sheet Files\C3-1 GRADING PLAN

EXISTING	CIVIL LEGEND	PROPOSED
	SANITARY MANHOLE	
	STORM MANHOLE	
	CATCH BASIN	
	CULVERT	
	HYDRANT	
	GATEVALVE	
	POST INDICATOR VALVE	
	LIGHT POLE	
	POWER POLE	
	SIGN	
	BENCHMARK	
	SOIL BORINGS	
	WATER MANHOLE	
	TELEPHONE MANHOLE	
	UTILITY MANHOLE	
	ELECTRIC MANHOLE	
	WATER SERVICE	
	SANITARY SERVICE	
	HANDICAP PARKING	
	DIRECTION OF FLOW	
	SPOT ELEVATION	
	CONTOURS	
	SANITARY SEWER	
	STORM SEWER	
	WATERMAIN	
	FORCEMAIN	
	DRAINTILE	
	SILT FENCE	
	CURB & GUTTER	
	RETAINING WALL	
	TREELINE	
	EASEMENT LINE	
	SETBACK LINE	
	FENCE LINE	
	UNDERGROUND TELE	
	UNDERGROUND GAS	
	OVERHEAD UTILITY	

0 50 100
SCALE IN FEET

CALL BEFORE YOU DIG!
Gopher State One Call
TWIN CITY AREA: 651-454-0002
TOLL FREE: 1-800-252-1166

WARNING:

THE CONTRACTOR SHALL BE RESPONSIBLE FOR CALLING FOR LOCATIONS OF ALL EXISTING UTILITIES. THEY SHALL COOPERATE WITH ALL UTILITY COMPANIES IN MAINTAINING THEIR SERVICE AND / OR RELOCATION OF LINES.

THE CONTRACTOR SHALL CONTACT GOPHER STATE ONE CALL AT 651-454-0002 AT LEAST 48 HOURS IN ADVANCE FOR THE LOCATIONS OF ALL UNDERGROUND WIRES, CABLES, CONDUITS, PIPES, MANHOLES, VALVES OR OTHER BURIED STRUCTURES BEFORE DIGGING. THE CONTRACTOR SHALL REPAIR OR REPLACE THE ABOVE WHEN DAMAGED DURING CONSTRUCTION AT NO COST TO THE OWNER.

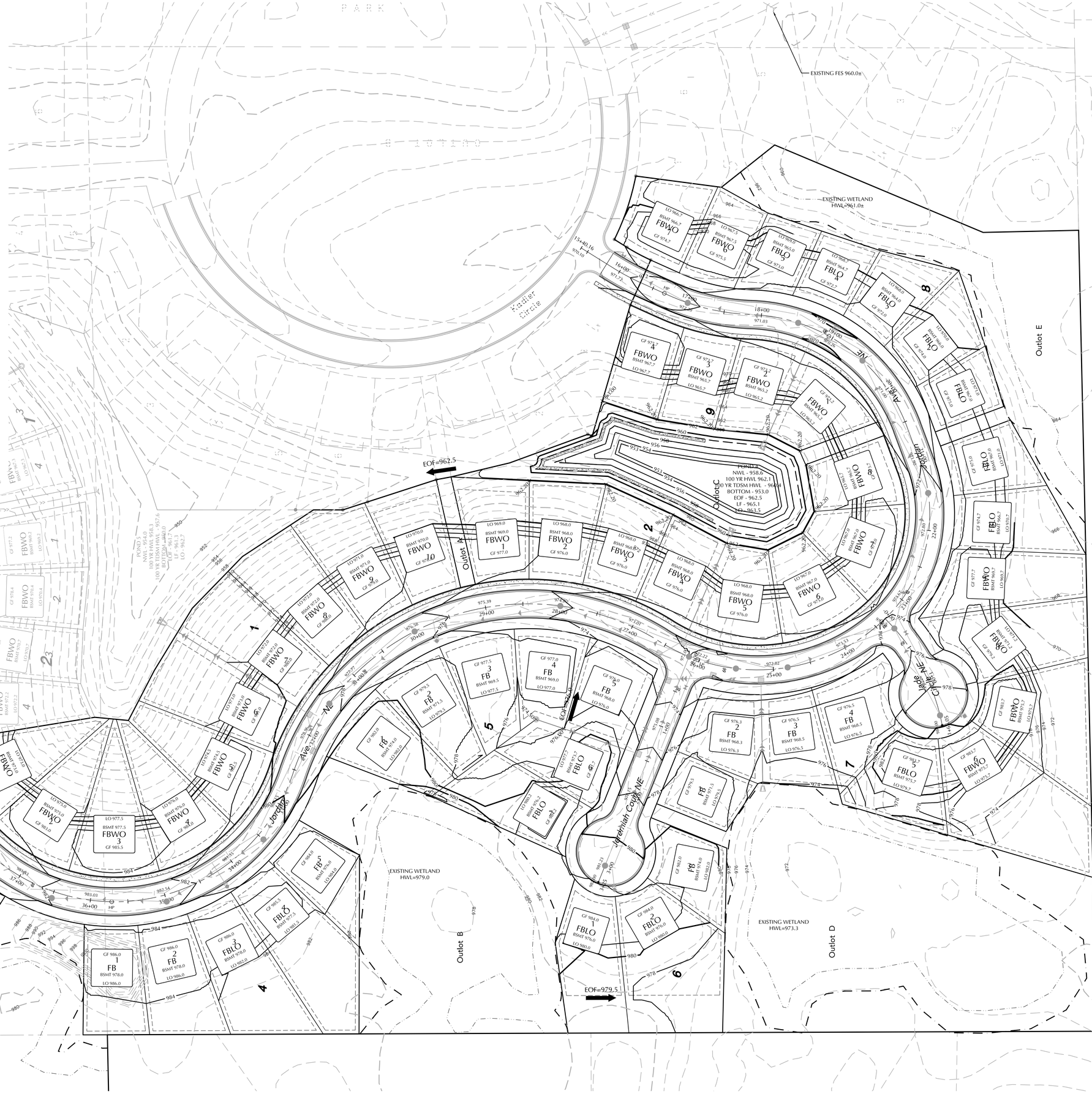

CROW RIVER HEIGHTS WEST FUTURE ADD.
HANOVER, MN

BACKES COMPANIES
11413 ASHBURY CIRCLE N.
CHAMPLIN, MN 55316
PHONE: (612) 369-7750
FAX (612) 566-1525

LOUCKS
PLANNING
CIVIL ENGINEERING
LAND SURVEYING
LANDSCAPE ARCHITECTURE
ENVIRONMENTAL
7200 Hemlock Lane, Suite 300
Maple Grove, MN 55369
763.424.5505
www.loucksinc.com

CADD QUALIFICATION

CADD files prepared by the Consultant for this project are instruments of the Consultant professional services for use solely with respect to this project. These CADD files shall not be used on other projects, for additions to this project, or for completion of this project by others without written approval by the Consultant. One hard copy plan or electronic copy of plans is permitted to obtain copies of the CADD drawing files for information and reference only. All intentional or unintentional revisions, additions, or deletions to these CADD files shall be made at the full risk of that party making such revisions, additions or deletions and that party shall hold harmless and indemnify the Consultant from any & all responsibilities, claims, and liabilities.

SUBMITTAL/REVISIONS

04/20/18	CITY SUBMITTAL

PROFESSIONAL SIGNATURE

I hereby certify that this plan, specification or report was prepared by me or under my direct supervision and that I am a duly Licensed Professional Engineer under the laws of the State of Minnesota.

PRELIMINARY

Licensed Professional Engineer - PE
Date: 20383

QUALITY CONTROL

Loucks Project No.	16101A
Project Lead	TWM
Drawn By	ZHW
Checked By	TWM
Review Date	04/02/18

SHEET INDEX

C0-1	COVER SHEET
C1-1	EXISTING CONDITIONS
C1-2	PRELIMINARY PLAT
C2-0 - C2-2	SITE PLAN
C3-0 - C3-2	GRADING PLAN
C3-3 - C3-5	SWPPP PLAN & NOTES
C4-0 - C4-2	UTILITY PLAN
C8-1 - C8-2	DETAILS
L0-1 - L0-3	TREE PRESERVATION
L0-4	TREE INVENTORY
L1-1 - L1-2	LANDSCAPE PLANS
L2-1	LANDSCAPE DETAILS

SOUTH GRADING PLAN

C3-2

Plotted: 04/19/2018 9:36 AM W:\2016\16101A\CADD DATA\CIVIL dwg\Sheet Files\C3-1 GRADING PLAN

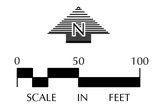

EXISTING	CIVIL LEGEND	PROPOSED
	SANITARY MANHOLE	
	STORM MANHOLE	
	CATCH BASIN	
	CULVERT	
	HYDRANT	
	GATEVALVE	
INV	POST INDICATOR VALVE	INV
	LIGHT POLE	
	POWER POLE	
	SIGN	
BM	BENCHMARK	
	SOIL BORINGS	
	WATER MANHOLE	
	TELEPHONE MANHOLE	
	UTILITY MANHOLE	
	ELECTRIC MANHOLE	
	WATER SERVICE	
	SANITARY SERVICE	
	HANDICAP PARKING	
	DIRECTION OF FLOW	
982	SPOT ELEVATION	982
	CONTOURS	
	SANITARY SEWER	
	STORM SEWER	
	WATERMAIN	
FM	FORCEMAIN	FM
DT	DRAINTILE	DT
	SILT FENCE	
	CURB & GUTTER	
	RETAINING WALL	
	TREELINE	
	EASEMENT LINE	
	SETBACK LINE	
	FENCE LINE	
TEL	UNDERGROUND TELE	
GAS	UNDERGROUND GAS	
OH	OVERHEAD UTILITY	

SITE PLAN LEGEND

- SF — SILT FENCE
- BIOROLL
- INLET PROTECTION
- EXISTING DRAINAGE PATTERN
- PROPOSED DRAINAGE PATTERN
- ROCK CONSTRUCTION ENTRANCE
- WOODFIBER BLANKET

CALL BEFORE YOU DIG!

Gopher State One Call

TWIN CITY AREA: 651-454-0002
TOLL FREE: 1-800-252-1166

WARNING:

THE CONTRACTOR SHALL BE RESPONSIBLE FOR CALLING FOR LOCATIONS OF ALL EXISTING UTILITIES. THEY SHALL COOPERATE WITH ALL UTILITY COMPANIES IN MAINTAINING THEIR SERVICE AND / OR RELOCATION OF LINES.

THE CONTRACTOR SHALL CONTACT GOPHER STATE ONE CALL AT 651-454-0002 AT LEAST 48 HOURS IN ADVANCE FOR THE LOCATIONS OF ALL UNDERGROUND WIRES, CABLES, CONDUITS, PIPES, MANHOLES, VALVES OR OTHER BURIED STRUCTURES BEFORE DIGGING. THE CONTRACTOR SHALL REPAIR OR REPLACE THE ABOVE WHEN DAMAGED DURING CONSTRUCTION AT NO COST TO THE OWNER.

CROW RIVER HEIGHTS WEST FUTURE ADD.

HANOVER, MN

BACKES COMPANIES
11413 ASHBURY CIRCLE N.
CHAMPLIN, MN 55316
PHONE: (612) 369-7750
FAX (612) 566-1525

LOUCKS
PLANNING
CIVIL ENGINEERING
LAND SURVEYING
LANDSCAPE ARCHITECTURE
ENVIRONMENTAL
7200 Hemlock Lane, Suite 300
Maple Grove, MN 55369
763.424.5505
www.loucksinc.com

CADD QUALIFICATION

CADD files prepared by the Consultant for this project are instruments of the Consultant's professional services for use solely with respect to this project. These CADD files shall not be used on other projects, for additions to this project, or for completion of this project by others without written approval by the Consultant. Only hard copy (paper) documents shall be permitted to obtain copies of the CADD drawing files for information and reference only. All intentional or unintentional revisions, additions, or deletions to these CADD files shall be made at the full risk of that party making such revisions, additions or deletions and that party shall hold harmless and indemnify the Consultant from any & all responsibilities, claims, and liabilities.

SUBMITTAL/REVISIONS

04/20/18	CITY SUBMITTAL

PROFESSIONAL SIGNATURE

I hereby certify that this plan, specification or report was prepared by me or under my direct supervision and that I am a duly Licensed Professional Engineer under the laws of the State of Minnesota.

PRELIMINARY

Licensed McLouth - PE
Date 20383

QUALITY CONTROL

Loucks Project No.	16101A
Project Lead	TWM
Drawn By	ZHW
Checked By	TWM
Review Date	04/02/18

SHEET INDEX

C0-1	COVER SHEET
C1-1	EXISTING CONDITIONS
C1-2	PRELIMINARY PLAT
C2-0 - C2-2	SITE PLAN
C3-0 - C3-2	GRADING PLAN
C3-3 - C3-5	SWPPP PLAN & NOTES
C4-0 - C4-2	UTILITY PLAN
C8-1 - C8-2	DETAILS
L0-1 - L0-3	TREE PRESERVATION
L0-4	TREE INVENTORY
L1-1 - L1-2	LANDSCAPE PLANS
L2-1	LANDSCAPE DETAILS

NORTH SWPPP

C3-3

Plotted: 04 /19 / 2018 9:37 AM W:\2016\16101A\CADD DATA\CIVIL_dwg Sheet Files\C-3 SWPPP

EXISTING	CIVIL LEGEND	PROPOSED
	SANITARY MANHOLE	
	STORM MANHOLE	
	CATCH BASIN	
	CULVERT	
	HYDRANT	
	GATEVALVE	
	POST INDICATOR VALVE	
	LIGHT POLE	
	POWER POLE	
	SIGN	
	BENCHMARK	
	SOIL BORINGS	
	WATER MANHOLE	
	TELEPHONE MANHOLE	
	UTILITY MANHOLE	
	ELECTRIC MANHOLE	
	WATER SERVICE	
	SANITARY SERVICE	
	HANDICAP PARKING	
	DIRECTION OF FLOW	
	SPOT ELEVATION	
	CONTOURS	
	SANITARY SEWER	
	STORM SEWER	
	WATERMAIN	
	FORCEMAIN	
	DRAINTILE	
	SILT FENCE	
	CURB & GUTTER	
	RETAINING WALL	
	TREELINE	
	EASEMENT LINE	
	SETBACK LINE	
	FENCE LINE	
	UNDERGROUND TELE	
	UNDERGROUND GAS	
	OVERHEAD UTILITY	

0 50 100
SCALE IN FEET

SITE PLAN LEGEND

- SF — SILT FENCE
- BIOROLL
- INLET PROTECTION
- EXISTING DRAINAGE PATTERN
- PROPOSED DRAINAGE PATTERN
- ROCK CONSTRUCTION ENTRANCE
- WOODFIBER BLANKET

CALL BEFORE YOU DIG!

Gopher State One Call

TWIN CITY AREA: 651-454-0002
TOLL FREE: 1-800-252-1166

WARNING:

THE CONTRACTOR SHALL BE RESPONSIBLE FOR CALLING FOR LOCATIONS OF ALL EXISTING UTILITIES. THEY SHALL COOPERATE WITH ALL UTILITY COMPANIES IN MAINTAINING THEIR SERVICE AND / OR RELOCATION OF LINES.

THE CONTRACTOR SHALL CONTACT GOPHER STATE ONE CALL AT 651-454-0002 AT LEAST 48 HOURS IN ADVANCE FOR THE LOCATIONS OF ALL UNDERGROUND WIRES, CABLES, CONDUITS, PIPES, MANHOLES, VALVES OR OTHER BURIED STRUCTURES BEFORE DIGGING. THE CONTRACTOR SHALL REPAIR OR REPLACE THE ABOVE WHEN DAMAGED DURING CONSTRUCTION AT NO COST TO THE OWNER.

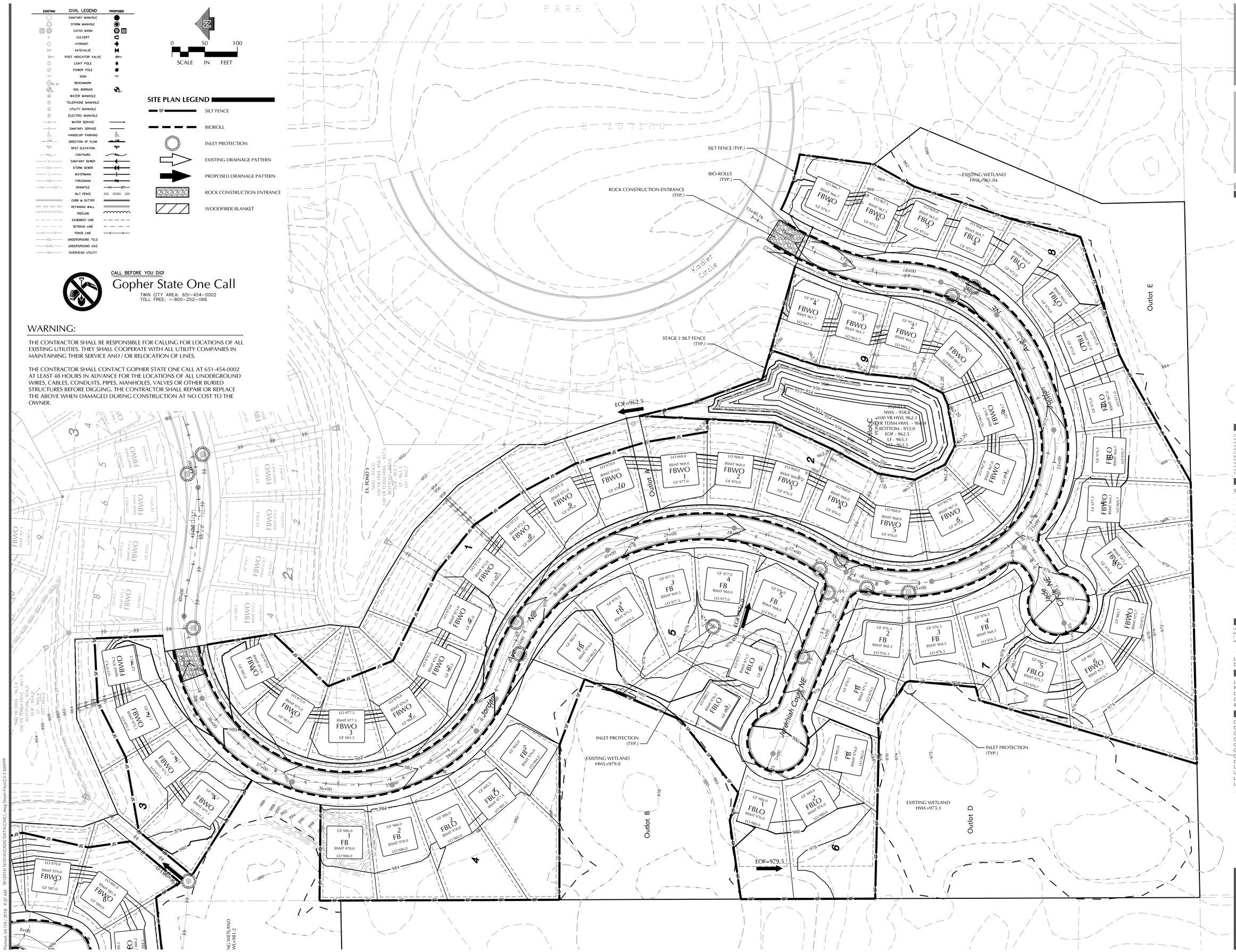

Plotted: 04/19/2018 9:37 AM W:\2016\16101A\CADD DATA\CIVIL dwg\Sheet Files\C3-3 SWPPP

CROW RIVER HEIGHTS WEST FUTURE ADD.

HANOVER, MN

BACKES COMPANIES
11413 ASHBURY CIRCLE N.
CHAMPLIN, MN 55316
PHONE: (612) 369-7750
FAX (612) 566-1525

LOUCKS
PLANNING
CIVIL ENGINEERING
LAND SURVEYING
LANDSCAPE ARCHITECTURE
ENVIRONMENTAL
7200 Hemlock Lane, Suite 300
Maple Grove, MN 55369
763.424.5505
www.loucksinc.com

CADD QUALIFICATION

CADD files prepared by the Consultant for this project are instruments of the Consultant's professional services for use solely with respect to this project. These CADD files shall not be used on other projects, for additions to this project, or for completion of this project by others without written approval by the Consultant. Only the Consultant's signature and seal shall be permitted on electronic copies of the CADD drawing files for information and reference only. All intentional or unintentional revisions, additions, or deletions to these CADD files shall be made at the full risk of that party making such revisions, additions or deletions and that party shall hold harmless and indemnify the Consultant from any & all responsibilities, claims, and liabilities.

SUBMITTAL/REVISIONS

04/20/18	CITY SUBMITTAL

PROFESSIONAL SIGNATURE

I hereby certify that this plan, specification, or report was prepared by me or under my direct supervision and that I am a duly Licensed Professional Engineer under the laws of the State of Minnesota.

PRELIMINARY

License or Cert. No. 20383
Date

QUALITY CONTROL

Loucks Project No.	16101A
Project Lead	TWM
Drawn By	ZHW
Checked By	TWM
Review Date	04/02/18

SHEET INDEX

C0-1	COVER SHEET
C1-1	EXISTING CONDITIONS
C1-2	PRELIMINARY PLAT
C2-0 - C2-2	SITE PLAN
C3-0 - C3-2	GRADING PLAN
C3-3 - C3-5	SWPPP PLAN & NOTES
C4-0 - C4-2	UTILITY PLAN
C8-1 - C8-2	DETAILS
L0-1 - L0-3	TREE PRESERVATION
L0-4	TREE INVENTORY
L1-1 - L1-2	LANDSCAPE PLANS
L2-1	LANDSCAPE DETAILS

SOUTH SWPPP

C3-4

SWPPP NOTES

1. PROJECT DESCRIPTION
THE NATURE OF THIS PROJECT WILL CONSIST OF CONSTRUCTING SINGLE FAMILY RESIDENTIAL LOTS AND HOMES, UTILITIES AND STREETS.

2. SEQUENCING OF MAJOR CONSTRUCTION ACTIVITIES ARE AS FOLLOWS:

1. INSTALL VEHICLE TRACKING BMP
2. INSTALL SILT FENCE AROUND SITE
3. INSTALL PROTECTIVE FENCE AROUND INFILTRATION AREAS
4. CLEAR AND GRUB SITE
5. STRIP AND STOCKPILE TOPSOIL
6. REMOVE PAVEMENTS AND UTILITIES
7. CONSTRUCT STORMWATER MANAGEMENT BASINS
8. INSTALL SILT FENCE AROUND BASINS
9. ROUGH GRADE SITE
10. IMPORT CLEAN FILL FOR REPLACEMENT AND BALANCE
11. INSTALL UTILITIES
12. INSTALL BUILDING FOUNDATIONS
13. INSTALL CURB AND GUTTER
14. INSTALL PAVEMENTS AND WALKS
15. INSTALL SMALL UTILITIES (GAS, PHONE, ELECTRIC, CABLE, ETC.)
16. FINAL GRADE SITE
17. REMOVE ACCUMULATED SEDIMENT FROM BASINS
18. CONSTRUCT INFILTRATION BASIN
19. SEED AND MULCH
20. WHEN ALL CONSTRUCTION ACTIVITY IS COMPLETE AND THE SITE IS STABILIZED, REMOVE SILT FENCE AND RESEED ANY AREAS DISTURBED BY THE REMOVAL.

3. SITE DATA:

AREA OF DISTURBANCE:	±52.313 AC
PRE-CONSTRUCTION IMPERVIOUS AREA:	±0.0 AC
POST-CONSTRUCTION IMPERVIOUS AREA:	±16.6 AC

GENERAL SOIL TYPE: SEE GEOTECHNICAL REPORT IN SPECIFICATIONS

4. THE LOCATION OF AREAS NOT TO BE DISTURBED MUST BE IDENTIFIED WITH FLAGS, STAKES, SIGNS; SILT FENCE, ETC. BEFORE CONSTRUCTION BEGINS.

5. ALL DISTURBED GROUND LEFT INACTIVE FOR SEVEN (7) OR MORE DAYS SHALL BE STABILIZED BY SEEDING OR SODDING (ONLY AVAILABLE PRIOR TO SEPTEMBER 15) OR BY MULCHING OR COVERING OR OTHER EQUIVALENT CONTROL MEASURE, AT A RATE OF 1.5 TIMES STANDARD SEEDING FINAL STABILIZATION TO BE DONE PER LANDSCAPE PLAN, SEE SHEET L1-1.

6. ON SLOPES 3:1 OR GREATER MAINTAIN SHEET FLOW AND MINIMIZE RILLS AND/OR GULLIES, SLOPE LENGTHS CAN NOT BE GREATER THAN 75 FEET.
ALL 3:1 SLOPES TO BE STABILIZED WITH EROSION CONTROL BLANKET

7. ALL STORM DRAINS AND INLETS MUST BE PROTECTED UNTIL ALL SOURCES OF POTENTIAL DISCHARGE ARE STABILIZED.

8. TEMPORARY SOIL STOCKPILES MUST HAVE EFFECTIVE SEDIMENT CONTROL AND CAN NOT BE PLACED IN SURFACE WATERS OR STORM WATER CONVEYANCE SYSTEMS. TEMPORARY STOCKPILES WITHOUT SIGNIFICANT AMOUNT OF SILT, CLAY, OR ORGANIC COMPOUNDS ARE EXEMPT EX: CLEAN AGGREGATE STOCK PILES, DEMOLITION CONCRETE STOCKPILES, SAND STOCKPILES.

9. SEDIMENT LADEN WATER MUST BE DISCHARGED TO A SEDIMENTATION BASIN WHENEVER POSSIBLE. IF NOT POSSIBLE, IT MUST BE TREATED WITH THE APPROPRIATE BMP'S.

10. SOLID WASTE MUST BE DISPOSED OF PROPERLY AND MUST COMPLY WITH MPCA DISPOSAL REQUIREMENTS.

11. THE WATERSHED DISTRICT OR THE CITY MAY HAVE REQUIREMENTS FOR INSPECTIONS OR AS-BUILT DRAWINGS VERIFYING PROPER CONSTRUCTION OF THE BMPS.

12. THE OWNER WHO SIGNS THE NPDES PERMIT APPLICATION IS A PERMITTEE AND IS RESPONSIBLE FOR COMPLIANCE WITH ALL TERMS AND CONDITIONS OF THE PERMIT. THE OPERATOR (CONTRACTOR) WHO SIGNS THE NPDES PERMIT APPLICATION IS A PERMITTEE FOR PARTS II.B., PART II.C., PART II.B-F., PART V., PART IV AND APPLICABLE CONSTRUCTION ACTIVITY REQUIREMENTS FOUND IN APPENDIX A, PART C, OF THE NPDES PERMIT AND IS JOINTLY RESPONSIBLE WITH THE OWNER FOR COMPLIANCE WITH THOSE PORTIONS OF THE PERMIT.

13. TERMINATION OF COVERAGE-PERMITTEE(S) WISHING TO TERMINATE COVERAGE MUST SUBMIT A NOTICE OF TERMINATION (NOT) TO THE MPCA. ALL PERMITTEE(S) MUST SUBMIT A NOT WITHIN 30 DAYS AFTER ONE OR MORE OF THE FOLLOWING CONDITIONS HAVE BEEN MET:

A. FINAL STABILIZATION, PER NPDES PERMIT PART IV.G. HAS BEEN ACHIEVED ON ALL PORTIONS OF THE SITE FOR WHICH THE PERMITTEE IS RESPONSIBLE.
B. TRANSFER OF OWNERSHIP AS DESCRIBED IN THE PERMIT.

15. INSPECTIONS
A. INITIAL INSPECTION FOLLOWING SILT FENCE INSTALLATION BY CITY REPRESENTATIVE IS REQUIRED.
B. EXPOSED SOIL AREAS: ONCE EVERY 7 DAYS AND WITHIN 24 HOURS FOLLOWING A RAINFALL EVENT GREATER THAN OR EQUAL TO 0.5" IN 24 HOURS.
C. STABILIZED AREAS: ONCE EVERY 30 DAYS
D. FROZEN GROUND: AS SOON AS RUNOFF OCCURS OR PRIOR TO RESUMING CONSTRUCTION.
E. INSPECTION AND MAINTENANCE RECORDS MUST BE RETAINED FOR 3 YEARS AFTER FILING OF THE NOTICE OF TERMINATION AND MUST INCLUDE: DATE AND TIME OF ACTION, NAME OF PERSON(S) CONDUCTING WORK, FINDING OF INSPECTIONS AND RECOMMENDATIONS FOR CORRECTIVE ACTION, DATE AND AMOUNT OF RAINFALL EVENTS GREATER THAN 0.5 INCHES IN A 24 HOUR PERIOD.

16. MINIMUM MAINTENANCE
A. SILT FENCE TO BE REPAIRED, REPLACED, SUPPLEMENTED WHEN NONFUNCTIONAL, OR 1/3 FULL; WITHIN 24 HOURS
B. SEDIMENT BASINS DRAINED AND SEDIMENT REMOVED WHEN REACHES 1/2 STORAGE VOLUME. REMOVAL MUST BE COMPLETE WITHIN 72 HOURS OF DISCOVERY.
C. SEDIMENT REMOVED FROM SURFACE WATERS WITHIN (7)SEVEN DAYS
D. CONSTRUCTION SITE EXITS INSPECTED, TRACKED SEDIMENT REMOVED WITH 24 HOURS.
E. PROVIDE COPIES OF EROSION INSPECTION RESULTS TO CITY ENGINEER FOR ALL RAIN EVENTS GREATER THAN 0.5" OVER 24 HOURS

17. THE SWPPP, INCLUDING ALL CHANGES TO IT, AND INSPECTIONS AND MAINTENANCE RECORDS MUST BE KEPT AT THE SITE DURING CONSTRUCTION ACTIVITY BY THE PERMITTEE(S) WHO HAVE OPERATIONAL CONTROL OF THE SITE.

18. OWNER MUST KEEP RECORDS OF ALL PERMITS REQUIRED FOR THE PROJECT, THE SWPPP, ALL INSPECTIONS AND MAINTENANCE, PERMANENT OPERATION AND MAINTENANCE AGREEMENTS, AND REQUIRED CALCULATIONS FOR TEMPORARY AND PERMANENT STORM WATER MANAGEMENT SYSTEMS. THESE RECORDS MUST BE RETAINED FOR THREE YEARS AFTER FILING NPDES NOTICE OF TERMINATION.

19. SWPPP MUST BE AMENDED WHEN:
A. THERE IS A CHANGE IN DESIGN, OPERATION, MAINTENANCE, WEATHER OR SEASONAL CONDITIONS THAT HAS A SIGNIFICANT EFFECT ON DISCHARGE
B. INSPECTIONS INDICATE THAT THE SWPPP IS NOT EFFECTIVE AND DISCHARGE IS EXCEEDING WATER QUALITY STANDARDS.
C. THE BMP'S IN THE SWPPP ARE NOT CONTROLLING POLLUTANTS IN DISCHARGES OR IS NOT CONSISTENT WITH THE TERMS AND CONDITIONS OF THE PERMIT.
D. AT ANY TIME AFTER PERMIT COVERAGE IS EFFECTIVE, THE MPCA MAY DETERMINE THAT THE PROJECT'S STORMWATER DISCHARGES MAY CAUSE, HAVE REASONABLE POTENTIAL TO CAUSE, OR CONTRIBUTE TO NON-ATTAINMENT OF ANY APPLICABLE WATER QUALITY STANDARD, OR THAT THE SWPPP DOES NOT INCORPORATE THE APPLICABLE REQUIREMENTS IN PART III.A.8., IMPAIRED WATERS AND TMDLS). IF A WATER QUALITY STANDARD CHANGES DURING THE TERM OF THIS PERMIT, THE MPCA WILL ASK A DETERMINATION AS TO WHETHER A MODIFICATION OF THE SWPPP IS NECESSARY TO ADDRESS THE NEW STANDARD. IF THE MPCA MAKES SUCH DETERMINATION(S) OR ANY OF THE DETERMINATIONS IN PARTS III.B.1.-3., THE MPCA WILL NOTIFY THE PERMITTEE(S) IN WRITING, IN RESPONSE, THE PERMITTEE(S) MUST AMEND THE SWPPP TO ADDRESS THE IDENTIFIED CONCERNS AND SUBMIT INFORMATION REQUESTED BY THE MPCA, WHICH MAY INCLUDE AN INDIVIDUAL PERMIT APPLICATION. IF THE MPCA'S WRITTEN NOTIFICATION REQUIRES A RESPONSE, FAILURE TO RESPOND WITHIN THE SPECIFIED TIMEFRAME CONSTITUTES A PERMIT VIOLATION.

20. CONCRETE WASHOUT AREA
A. CONTRACTOR TO PROVIDE PREFABRICATED CONCRETE WASH-OUT CONTAINER WITH RAIN PROTECTION PER PLAN.
B. CONCRETE WASH-OUT TO BE IDENTIFIED WITH SIGNAGE STATING "CONCRETE WASHOUT AREA DO NOT OVERFILL".
C. CONCRETE WASHOUT WATER NEEDS TO BE PUMPED WITHIN 24 HOURS OF STANDING WATER IN WASHOUT AREA.

21. IN THE EVENT OF ENCOUNTERING A WELL OR SPRING DURING CONSTRUCTION CONTRACTOR TO CEASE CONSTRUCTION ACTIVITY AND NOTIFY ENGINEER.

22. PIPE OUTLETS MUST BE PROVIDED WITH TEMPORARY OR PERMANENT ENERGY DISSIPATION WITHIN 24 HOURS AFTER CONNECTION TO A SURFACE WATER.

23. TEMPORARY AND PERMANENT SOIL STABILIZATION
A. TEMPORARY SOIL STABILIZATION MEASURES SHALL CONSIST OF SEEDING.
B. PERMANENT SOIL STABILIZATION SHALL CONSIST OF HYDRO MULCH OR STRAW MULCH.
C. 7 DAY STABILIZATION TIME FRAME IS REQUIRED FOR ALL EXPOSED SOILS THAT ARE DORMANT OR NOT BEING WORKED WITHIN THE 7 DAY WINDOW.

24. FINAL STABILIZATION
FINAL STABILIZATION REQUIRES THAT ALL SOIL DISTURBING ACTIVITIES HAVE BEEN COMPLETED AND THAT DISTURBED AREAS ARE STABILIZED BY A UNIFORM PERENNIAL VEGETATIVE COVER WITH 70% OF THE EXPECTED FINAL DENSITY, AND THAT ALL PERMANENT PAVEMENTS HAVE BEEN INSTALLED. ALL TEMPORARY BMP'S SHALL BE REMOVED, DITCHES STABILIZED, AND SEDIMENT SHALL BE REMOVED FROM PERMANENT CONVEYANCES AND SEDIMENTATION BASINS IN ORDER TO RETURN THE POND TO DESIGN CAPACITY.

24. TEMPORARY SEDIMENTATION BASINS
A. THE TEMPORARY SEDIMENTATION BASINS SHALL BE CONSTRUCTED AND MADE OPERATIONAL PRIOR TO DISTURBANCE OF 10 OR MORE ACRES DRAINING TO A COMMON LOCATION.
B. TEMPORARY SEDIMENTATION BASINS ARE REQUIRED PRIOR TO RUNOFF LEAVING THE CONSTRUCTION SITE OR ENTERING SURFACE WATERS WHEN 5 OR MORE ACRES OF DISTURBED SOILS DRAIN TO A COMMON LOCATION. SINCE THE SITE IS WITHIN ONE MILE OF IMPAIRED WATER BODY, THEY PROVIDE 3,600 CUBIC FEET OF STORAGE BELOW THE OUTLET PER ACRE DRAINED. IF HYDRAULIC CALCULATIONS ARE AVAILABLE, THE TEMPORARY SEDIMENTATION BASIN MUST PROVIDE A STORAGE VOLUME EQUIVALENT TO THE 2-YEAR, 24-HOUR STORM, BUT IN NO CASE LESS THAN 1800 CUBIC FEET PER ACRE DRAINED. THE TEMPORARY SEDIMENTATION BASIN MUST BE CONSTRUCTED AND MADE OPERATIONAL CONCURRENT WITH THE START OF SOIL DISTURBANCE UP GRADIENT OF THE POND. THE TEMPORARY SEDIMENTATION BASIN SHALL BE DESIGNED TO PREVENT SHORT CIRCUITING. THE OUTFALL SHALL BE DESIGNED TO REMOVE FLOATABLE DEBRIS, ALLOW FOR COMPLETE DRAWDOWN OF THE POND FOR MAINTENANCE ACTIVITIES, AND HAVE ENERGY DISSIPATION. THE EMERGENCY SPILLWAY SHALL BE STABILIZED.
C. TEMPORARY SEDIMENTATION BASINS SHALL BE SITUATED OUTSIDE OF SURFACE WATERS AND ANY REQUIRED BUFFER ZONE, AND MUST BE DESIGNED TO AVOID DRAINING WETLANDS, UNLESS THE IMPACT IS IN COMPLIANCE WITH THE REQUIREMENTS OF THIS PERMIT.
D. EXCESSIVE SEDIMENT-LADEN WATER THAT IS NOT PROPERLY FILTERED WILL NOT BE PERMITTED TO DISCHARGE FROM SITE.

25. DEWATERING AND BASIN DRAINING
A. TURBID OR SEDIMENT-LADEN WATERS RELATED TO DEWATERING OR BASIN DRAINING SHALL BE DISCHARGED TO A TEMPORARY OR PERMANENT SEDIMENTATION BASIN ON THE PROJECT SITE UNLESS INFEASIBLE. THE TEMPORARY OR PERMANENT BASIN MAY DISCHARGE TO SURFACE WATERS IF THE BASIN WATER HAS BEEN VISUALLY CHECKED TO ENSURE ADEQUATE TREATMENT HAS BEEN OBTAINED IN THE BASIN AND THAT THE NUISANCE CONDITIONS WILL NOT RESULT FROM THE DISCHARGE. DISCHARGE POINTS SHALL BE ADEQUATELY PROTECTED FROM EROSION AND PROPER VELOCITY DISSIPATION PROVIDED.
B. ALL WATER FROM DEWATERING OR BASIN-DRAINING ACTIVITIES MUST BE DISCHARGED IN A MANNER THAT DOES NOT CAUSE NUISANCE CONDITIONS, EROSION IN THE RECEIVING CHANNELS OR ON DOWN SLOPE PROPERTIES, OR INUNDATION IN WETLANDS CAUSING SIGNIFICANT ADVERSE IMPACTS TO THE WETLAND.
C. IF FILTERS WITH BACKWASH WATERS ARE USED, THE BACKWASH WATER SHALL BE HAULED AWAY FOR DISPOSAL, RETURNED TO THE BEGINNING OF THE TREATMENT PROCESS, OR INCORPORATED INTO SITE IN A MANNER THAT DOES NOT CAUSE EROSION. BACKWASH WATER MAY BE DISCHARGED TO SANITARY SEWER IF PERMISSION IS GRANTED BY THE SANITARY SEWER AUTHORITY.

26. POLLUTION PREVENTION
A. BUILDING PRODUCTS THAT HAVE THE POTENTIAL TO LEACH POLLUTANTS MUST BE UNDER COVER TO PREVENT DISCHARGE OR PROTECTED BY AN EFFECTIVE MEANS DESIGNED TO MINIMIZE CONTACT WITH STORMWATER.
B. PESTICIDES, HERBICIDES, INSECTICIDES, FERTILIZERS, TREATMENT CHEMICALS, AND LANDSCAPE MATERIALS MUST BE UNDER COVER.
C. HAZARDOUS MATERIALS AND TOXIC WASTE CONTAINER MUST BE PROVIDED TO PREVENT VANDALISM.
D. SOLID WASTE MUST BE STORED, COLLECTED AND DISPOSED OF IN COMPLIANCE WITH MINN. R. CH 7035.
E. PORTABLE TOILETS MUST BE POSITIONED SO THAT THEY ARE SECURE AND WILL NOT BE TIPPED OR KNOCKED OVER. SANITARY WASTE MUST BE DISPOSED OF PROPERLY IN ACCORDANCE WITH MINN. R. CH 7041.
F. DISCHARGE OF SPILLED OR LEAKED CHEMICALS, INCLUDING FUEL, FROM ANY AREA WHERE CHEMICALS OR FUEL WILL BE LOADED OR UNLOADED SHALL BE PREVENTED USING DROP PANS OR ABSORBENTS. SUPPLIES SHALL BE AVAILABLE AT ALL TIMES TO CLEAN UP DISCHARGED MATERIALS AND THAT AN APPROPRIATE DISPOSAL METHOD MUST BE AVAILABLE FOR RECOVERED SPILLED MATERIALS.

27. DESIGN CALCULATIONS
TEMPORARY & PERMANENT STORMWATER TREATMENT ARE DESIGNED TO MEET MPCA GENERAL & SPECIAL WATER REQUIREMENTS. CALCULATIONS ARE PART OF THE HYDROLOGY REPORT, WHICH IS TO BE CONSIDERED PART OF THE SWPPP DOCUMENTS. SEE HYDROLOGY REPORT FOR ADDITIONAL INFORMATION.

28. GENERAL STORMWATER DISCHARGE REQUIREMENTS
ALL REQUIREMENTS LISTED IN PART III OF THE PERMIT FOR DESIGN OF THE PERMANENT STORMWATER MANAGEMENT SYSTEM AND DISCHARGE HAVE BEEN INCLUDED IN THE PREPARATION OF THIS SWPPP. THESE INCLUDE BUT ARE NOT LIMITED TO:
A. THE EXPECTED AMOUNT, FREQUENCY, INTENSITY, AND DURATION PRECIPITATION,
B. THE NATURE OF STORMWATER RUNOFF AND RUN-ON AT THE SITE.
C. PEAK FLOW RATES AND STORMWATER VOLUMES TO MINIMIZE EROSION AT OUTLETS AND DOWNSTREAM CHANNEL AND STREAM BANK EROSION.
D. THE RANGE OF SOIL PARTICLE SIZES EXPECTED TO BE PRESENT ON THE SITE.

29. CONSTRUCTION OF FILTRATION BASINS
A. NO HEAVY TRAFFIC ON FILTRATION AREAS. CONSTRUCTION TO BE DONE WITH MINIMAL COMPACTION TO FILTRATION AREAS. IF COMPACTION IS ENCOUNTERED, BASIN SOILS MUST BE REMOVED & RELAID.
B. INFILTRATION SYSTEMS MUST NOT BE EXCAVATED TO FINAL GRADE UNTIL THE CONTRIBUTING DRAINAGE AREA HAD BEEN CONSTRUCTED AND FULLY STABILIZED UNLESS RIGOROUS EROSION PREVENTION AND SEDIMENT CONTROLS ARE PROVIDED(PART III.D.1.C.).
C. WHEN AN INFILTRATION SYSTEM IS EXCAVATED TO FINAL GRADE (OR WITHIN THREE (3) FEET OF FINAL GRADE), THE PERMITTEE(S) MUST EMPLOY RIGOROUS EROSION PREVENTION AND SEDIMENT CONTROLS (E.G., DIVERSION BERMS) TO KEEP SEDIMENT AND RUNOFF COMPLETELY AWAY FROM THE INFILTRATION AREA. THE AREA MUST BE STAKED OFF AND MARKED SO THAT HEAVY CONSTRUCTION VEHICLES OR EQUIPMENT WILL NOT COMPACT THE SOIL IN THE PROPOSED INFILTRATION AREA.
D. TO PREVENT CLOGGING OF THE INFILTRATION OR FILTRATION SYSTEM, THE PERMITTEE(S) MUST USE A PRETREATMENT DEVICE SUCH AS A VEGETATED FILTER STRIP, SMALL SEDIMENTATION BASIN, OR WATER QUALITY INLET (E.G., GRIT CHAMBER) TO SETTLE PARTICULATES BEFORE THE STORMWATER DISCHARGES INTO THE INFILTRATION OF FILTRATION SYSTEM.

30. POST CONSTRUCTION
THE WATER QUALITY VOLUME THAT MUST BE RETAINED ON SITE BY THE PROJECT'S PERMANENT STORMWATER MANAGEMENT SYSTEM DESCRIBED IN PART III.D. SHALL BE ONE (1) INCH OF RUNOFF FROM THE NEW IMPERVIOUS SURFACES CREATED BY THE PROJECT. SEE PART III.D.1. FOR MORE INFORMATION ON INFILTRATION DESIGN, PROHIBITIONS AND APPROPRIATE SITE CONDITIONS.

31. RESPONSIBILITIES
A. THE OWNER MUST IDENTIFY A CONTRACTOR WHO WILL OVERSEE THE SWPPP IMPLEMENTATION AND THE PERSON RESPONSIBLE FOR INSPECTION AND MAINTENANCE.
B. THE OWNER MUST IDENTIFY THE A PERSON WHO WILL BE RESPONSIBLE FOR LONG TERM OPERATIONS AND MAINTENANCE OF THE PERMANENT STORMWATER MANAGEMENT SYSTEM:

32. TRAINING REQUIREMENTS
THE PERMITTEE(S) SHALL ENSURE THE FOLLOWING INDIVIDUALS IDENTIFIED IN THIS PART HAVE BEEN TRAINED IN ACCORDANCE WITH THIS PERMIT'S TRAINING REQUIREMENTS.
A. WHO MUST BE TRAINED:
1. INDIVIDUAL(S) PREPARING THE SWPPP FOR THE PROJECT
2. INDIVIDUAL(S) OVERSEEING IMPLEMENTATION OF, REVISING, AND AMENDING THE SWWP AND INDIVIDUAL(S) PERFORMING INSPECTIONS AS REQUIRED IN PART IV.E. ONE OF THESE INDIVIDUAL(S) MUST BE AVAILABLE ON AN ONSITE INSPECTION WITHIN 72 HOURS UPON REQUEST BY THE MPCA.
3. INDIVIDUAL(S) PERFORMING, OR SUPERVISING THE INSTALLATION, MAINTENANCE AND REPAIR OF BMPS, AT LEAST ONE INDIVIDUAL ON A PROJECT MUST BE TRAINED IN THE JOB DUTIES.
B. TRAINING CONTENT:
1. THE CONTENT AND EXTENT OF TRAINING MUST BE COMMENSURATE WITH THE INDIVIDUAL'S JOB DUTIES AND RESPONSIBILITIES WITH REGARD TO ACTIVITIES COVERED UNDER THIS PERMIT FOR THE PROJECT. AT LEAST ONE INDIVIDUAL PRESENT ON THE PERMITTED PROJECT SITE (OR AVAILABLE TO THE PROJECT SITE IN 72 HOURS) MUST BE TRAINED IN THE JOB DUTIES DESCRIBED IN PART III.F.1.B. AND PARTIII.F.1.C.
C. THE PERMITTEE(S) SHALL ENSURE THAT THE INDIVIDUALS ARE TRAINED BY LOCAL, STATE, FEDERAL AGENCIES, PROFESSIONAL OR OTHER ENTITIES WITH EXPERTISE IN EROSION PREVENTION, SEDIMENT CONTROL, PERMANENT STORMWATER MANAGEMENT AND THE MINNESOTA NPDES/SDS CONSTRUCTION STORMWATER PERMIT. AN UPDATE REFESHER-TRAINING MUST BE ATTENDED EVERY THREE (3) YEARS STARTING THREE (3) YEARS FROM THE ISSUANCE DATE OF THIS PERMIT.

LIST OF CONTACTS

TILE	CONTACT	COMPANY	PHONE NUMBER
OWNER	DENNIS BACKES	BACKES COMPANIES	612-369-7750
PROJECT MANAGER	TODD MCLOUTH	LOUCKS	763-496-6742
SWPPP DESIGNER	ZACH WEBBER	LOUCKS	763-496-6753
CONTRACTOR	TBD		
SITE MANAGER	TBD		

* MPCA 24HR. HAZARDOUS SPILL HOTLINE: 651-649-5457 OF 80420798

EROSION CONTROL NOTES

1. ALL STREETS IN AND ADJACENT TO THE PROJECT SHALL REMAIN CLEAN AND PASSABLE AT ALL TIMES.
2. A STABILIZED CONSTRUCTION ENTRANCE WILL BE PLACED AT ALL ENTRANCES THAT LEAD TO THE PROJECT SITE IN ACCORDANCE WITH THE STORMWATER POLLUTION PREVENTION PLAN AND THE APPROVED DETAILS.
3. SEDIMENT CONTROLS MUST BE IN PLACE AND APPROVED BY THE ENGINEER BEFORE ANY PHASE OF CONSTRUCTION CAN BEGIN.
4. INLET PROTECTION WILL BE INSTALLED AT ALL CATCH BASINS WITHIN THE PROJECT AREA PER STANDARD DETAILS UNTIL THE SITE IS STABILIZED.
5. PIPE OUTLETS MUST BE PROVIDED WITH TEMPORARY OR PERMANENT ENERGY DISSIPATION WITHIN 24 HOURS AFTER CONNECTION TO SURFACE WATER.
6. STABILIZATION OF DISTURBED AREAS SHALL BE DONE BY PERMANENT TURF ESTABLISHMENT WHENEVER POSSIBLE.
7. IN THE EVENT THAT PERMANENT STABILIZATION CANNOT BE IMPLEMENTED WITHIN 7 DAYS AFTER CONSTRUCTION ACTIVITY IN THE DISTURBED AREA HAS CEASED, TEMPORARY STABILIZATION BMPS MUST BE SCHEDULED TO OCCUR WITHIN THAT 7 DAY TIME FRAME RAPID STABILIZATION METHOD 4 SHALL BE EMPLOYED WITHIN 200 FEET OF THE NORMAL WETTED PERIMETER OF ALL DISCHARGE POINTS WITHIN 24 HOURS.
8. ALL STOCKPILES MUST HAVE PERIMETER SEDIMENT CONTROL IMPLEMENTED AND MAINTAINED AT ALL TIMES. STOCKPILES SHALL RECEIVE TEMPORARY STABILIZATION IF UNWORKED FOR 7 DAYS.
9. CONCRETE SLURRY FROM REMOVAL OPERATIONS MUST BE VACUUMED UP IMMEDIATELY. NO CONCRETE WASHOUT SHALL COME IN CONTACT WITH THE GROUND AND MUST BE PROPERLY DISPOSED OF.
10. ADDITIONAL EROSION AND SEDIMENT CONTROL MAY BE ADDED DURING ANY PHASE OF CONSTRUCTION AS DIRECTED BY THE ENGINEER.
11. CONTRACTOR MUST SUBMIT A DEWATERING PLAN TO THE ENGINEER FOR APPROVAL 10 DAYS PRIOR TO ANY DEWATERING ON SITE. THE PLAN MUST INCLUDE A DEWATERING SYSTEM PRIOR TO DISCHARGING INTO RECEIVING WATER. THE DEWATERING PLAN MUST ENSURE THAT THE DISCHARGE WATER IS FREE OF SEDIMENT AND TURBID WATER IN ACCORDANCE WITH THE PROJECT SPEC. THE DEWATERING PLAN MUST ALSO INCLUDE A COMPONENT FOR ONSITE TESTING AND MONITORING OF TURBIDITY AND PH.
12. RAPID STABILIZATION #4 WITH CATEGORY 3N BLANKET ON SIDE SLOPES 3:1 OR STEEPER.
13. TEMPORARY OR PERMANENT STABILIZATION AND DOWN GRADIENT PERIMETER SEDIMENT CONTROL IS NEEDED ON ROW, CURB, AND GUTTER LINE.

PERMANENT STORMWATER MANAGEMENT

	INFILTRATION
	STORMWATER HARVEST AND REUSE
X	FILTRATION
X	WET SEDIMENTATION BASIN
	REGIONAL PONDING

RECEIVING WATERS

NAME OF WATER BODY	TYPE OF WATER BODY	SPECIAL WATER	IMAIRED WATER	TYPE OF SPECIAL WATER
CROW RIVER	RIVER	NO	YES	

*7 DAY STABILIZATION TIME FRAME REQUIRED

ESTIMATED QUANTITIES

DESCRIPTION	UNIT	QUANTITY
TEMPORARY ROCK CONSTRUCTION ENTRANCE	EA	3
SILT FENCE (STANDARD)	LF	±11,590
STAGE 2 SILT FENCE (STANDARD)	LF	±3,355
INLET PROTECTION	EA	42
WOODFIBER BLANKET	SY	.
CONCRETE WASHOUT	EA	.
BIOROLL	LF	±15,465

UNIVERSITY OF MINNESOTA
Zachary Webber
Design of Construction SWPPP (May 31 2018)

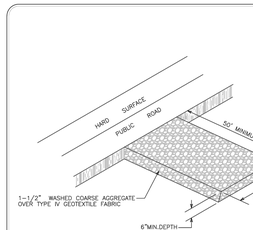

NOTES:
1. CONCRETE CONCRETE IS NOT ALLOWED
2. CONSTRUCTION ENTRANCE SHALL BE A MINIMUM OF 24' X 50'
3. GEOTEXTILE FABRIC REQUIRED UNDERNEATH COARSE AGGREGATE
4. MAINTENANCE IS INCIDENTAL

Standard Plate Library City of Hanover | Title: Rock Construction Entrance | Date: 01-16 | Revised: | Plate No. ERO - 01

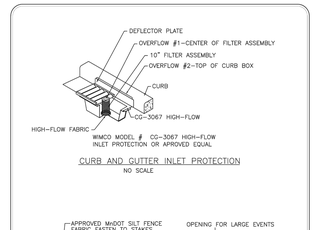

CURB AND GUTTER INLET PROTECTION
NO SCALE

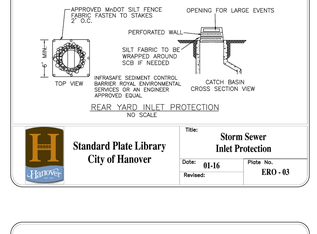

REAR YARD INLET PROTECTION
NO SCALE

Standard Plate Library City of Hanover | Title: Storm Sewer Inlet Protection | Date: 01-16 | Revised: | Plate No. ERO - 03

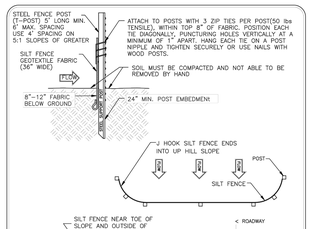

NOTES:
1. WOOD POST CAN BE USED ON SLOPES 10:1 OR FLATTER, USE A WOOD LATH AND 2 NAILS ON EACH WOOD POST.
2. SEDIMENT SHALL BE REMOVED WHEN IT REACHES ⅓ THE HEIGHT OF THE FENCE OR 9" DEEP MAX.
3. SILT FENCE SHALL BE INSPECTED WEEKLY AND AFTER EACH 0.5" RAIN EVENT IN 24 HOURS. ANY REQUIRED REPAIRS SHALL BE MADE IMMEDIATELY.
4. MONOFILAMENT GEOTEXTILE FABRIC PER Mn/DOT TABLE 3886-1 MACHINE SLICED.
5. SILT FENCE SHALL FOLLOW AS CLOSE AS POSSIBLE TO A SINGLE CONTOUR LINE.

Standard Plate Library City of Hanover | Title: Silt Fence | Date: 01-16 | Revised: | Plate No. ERO - 05

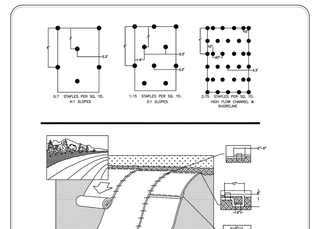

1. PREPARE SOIL BEFORE INSTALLING BLANKETS, INCLUDING ANY NECESSARY APPLICATION OF LIME, FERTILIZER, AND SEEDING.

2. BEGIN AT THE TOP OF THE SLOPE BY ANCHORING THE BLANKET IN A 6" (15cm) DEEP X 6" (15cm) WIDE TRENCH WITH APPROXIMATELY 12" (30cm) OF BLANKET EXTENDING BEYOND THE UP-SLOPE TRENCH. APPLY SEED TO THE AREA BEYOND THE TRENCH. FOLD THE REMAINING 12" (30cm) OF BLANKET OVER THE SEED AND COMPACT THE TRENCH AFTER STAPLING. STAPLE/STAKE APPROXIMATELY 12" (30cm) APART IN THE BOTTOM OF THE TRENCH. BACKFILL AND COMPACT THE TRENCH AFTER STAPLING. APPLY SEED TO COMPACTED SOIL AND FOLD REMAINING 12" (30cm) PORTION OF BLANKET BACK OVER SEED AND COMPACTED SOIL. SECURE BLANKET OVER COMPACTED SOIL WITH A ROW OF STAPLE/STAKES SPACED APPROXIMATELY 12" (30cm) APART ACROSS THE WIDTH OF THE BLANKET.

3. ROLL THE BLANKETS (N.) DOWN OR (S.) HORIZONTALLY ACROSS THE SLOPE. BLANKETS WILL UNROLL WITH APPROPRIATE SIDE AGAINST THE SOIL WHEN PROPERLY PLACED. ENSURE THAT THE BLANKET EXHIBITS GOOD CONTACT WITH THE UNDERLYING SOIL. FOLLOW THE MANUFACTURER'S INSTALLATION DIAGRAM FOR PROPER INSTALLATION OF THE BLANKET. WHEN USING OPTIONAL STAPLES, STAPLE APPROXIMATELY EVERY 2' (0.5m) ALONG EACH SIDE OF EACH BLANKET AND IN STAGGERED RANDOM PATTERN.

4. THE EDGES OF PARALLEL BLANKETS MUST BE STAPLED WITH APPROXIMATELY 2"-3" (5cm-7.5cm). OVERLAP DEPENDING ON BLANKET TYPE. TO ENSURE PROPER SEAM ALIGNMENT, PLACE THE EDGE OF THE OVERLAPPING BLANKET (REMOVE PREFORMED TURF TO EXPOSE PROPER SEAM ALIGNMENT). PLACE A DOUBLE ROW OF STAPLES STAGGERED APPROXIMATELY 4" (

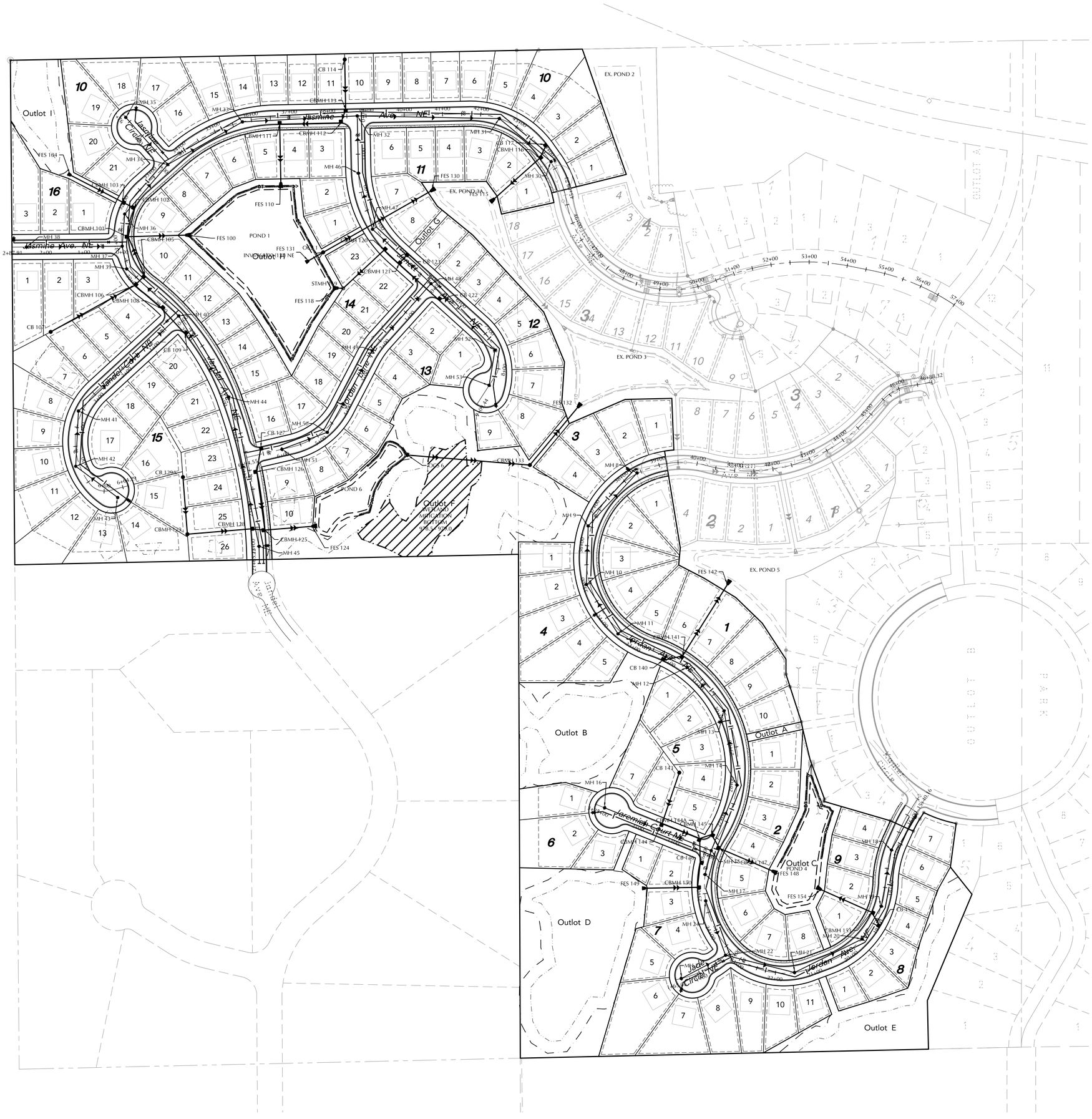

EXISTING	CIVIL LEGEND	PROPOSED
	SANITARY MANHOLE	
	STORM MANHOLE	
	CATCH BASIN	
	CULVERT	
	HYDRANT	
	GATEVALVE	
	POST INDICATOR VALVE	
	LIGHT POLE	
	POWER POLE	
	SIGN	
	BENCHMARK	
	SOIL BORINGS	
	WATER MANHOLE	
	TELEPHONE MANHOLE	
	UTILITY MANHOLE	
	ELECTRIC MANHOLE	
	WATER SERVICE	
	SANITARY SERVICE	
	HANDICAP PARKING	
	DIRECTION OF FLOW	
	SPOT ELEVATION	
	CONTOURS	
	SANITARY SEWER	
	STORM SEWER	
	WATERMAIN	
	FORCEMAIN	
	DRAINTILE	
	SILT FENCE	
	CURB & GUTTER	
	RETAINING WALL	
	TREELINE	
	EASEMENT LINE	
	SETBACK LINE	
	FENCE LINE	
	UNDERGROUND TELE	
	UNDERGROUND GAS	
	OVERHEAD UTILITY	

CROW RIVER HEIGHTS WEST FUTURE ADD.

HANOVER, MN

BACKES COMPANIES
11413 ASHBURY CIRCLE N.
CHAMPLIN, MN 55316
PHONE: (612) 369-7750
FAX (612) 566-1525

LOUCKS
PLANNING
CIVIL ENGINEERING
LAND SURVEYING
LANDSCAPE ARCHITECTURE
ENVIRONMENTAL
7200 Hemlock Lane, Suite 300
Maple Grove, MN 55369
763.424.5505
www.loucksinc.com

CADD QUALIFICATION

CADD files prepared by the Consultant for this project are instruments of the Consultant professional services for use solely with respect to this project. These CADD files shall not be used on other projects, for additions to this project, or for completion of this project by others without written approval by the Consultant. Electronic files provided to others shall be limited to permitted or obsolete copies of the CADD drawing files for information and reference only. All intentional or unintentional revisions, additions, or deletions to these CADD files shall be made at the full risk of that party making such revisions, additions or deletions and that party shall hold harmless and indemnify the Consultant from any & all responsibilities, claims, and liabilities.

SUBMITTAL/REVISIONS

04/20/18	CITY SUBMITTAL

PROFESSIONAL SIGNATURE

I hereby certify that this plan, specification, or report was prepared by me or under my direct supervision and that I am a duly Licensed Professional Engineer under the laws of the State of Minnesota.

PRELIMINARY

Licensed Name: McLouth - PE
Date: License No. 20383

QUALITY CONTROL

Loucks Project No.	16101A
Project Lead	TWM
Drawn By	ZHW
Checked By	TWM
Review Date	04/02/18

SHEET INDEX

C0-1	COVER SHEET
C1-1	EXISTING CONDITIONS
C1-2	PRELIMINARY PLAT
C2-0 - C2-2	SITE PLAN
C3-0 - C3-2	GRADING PLAN
C3-3 - C3-5	SWPPP PLAN & NOTES
C4-0 - C4-2	UTILITY PLAN
C8-1 - C8-2	DETAILS
L0-1 - L0-3	TREE PRESERVATION
L0-4	TREE INVENTORY
L1-1 - L1-2	LANDSCAPE PLANS
L2-1	LANDSCAPE DETAILS

CALL BEFORE YOU DIG!
Gopher State One Call
TWIN CITY AREA: 651-454-0002
TOLL FREE: 1-800-252-1166

WARNING:

THE CONTRACTOR SHALL BE RESPONSIBLE FOR CALLING FOR LOCATIONS OF ALL EXISTING UTILITIES. THEY SHALL COOPERATE WITH ALL UTILITY COMPANIES IN MAINTAINING THEIR SERVICE AND / OR RELOCATION OF LINES.

THE CONTRACTOR SHALL CONTACT GOPHER STATE ONE CALL AT 651-454-0002 AT LEAST 48 HOURS IN ADVANCE FOR THE LOCATIONS OF ALL UNDERGROUND WIRES, CABLES, CONDUITS, PIPES, MANHOLES, VALVES OR OTHER BURIED STRUCTURES BEFORE DIGGING. THE CONTRACTOR SHALL REPAIR OR REPLACE THE ABOVE WHEN DAMAGED DURING CONSTRUCTION AT NO COST TO THE OWNER.

OVERALL UTILITY PLAN

C4-0

Plotted: 04 /19 / 2018 9:38 AM W:\2016\16101A\CADD DATA\CIVIL_dwg Sheet Files\C4-1 UTILITY PLAN

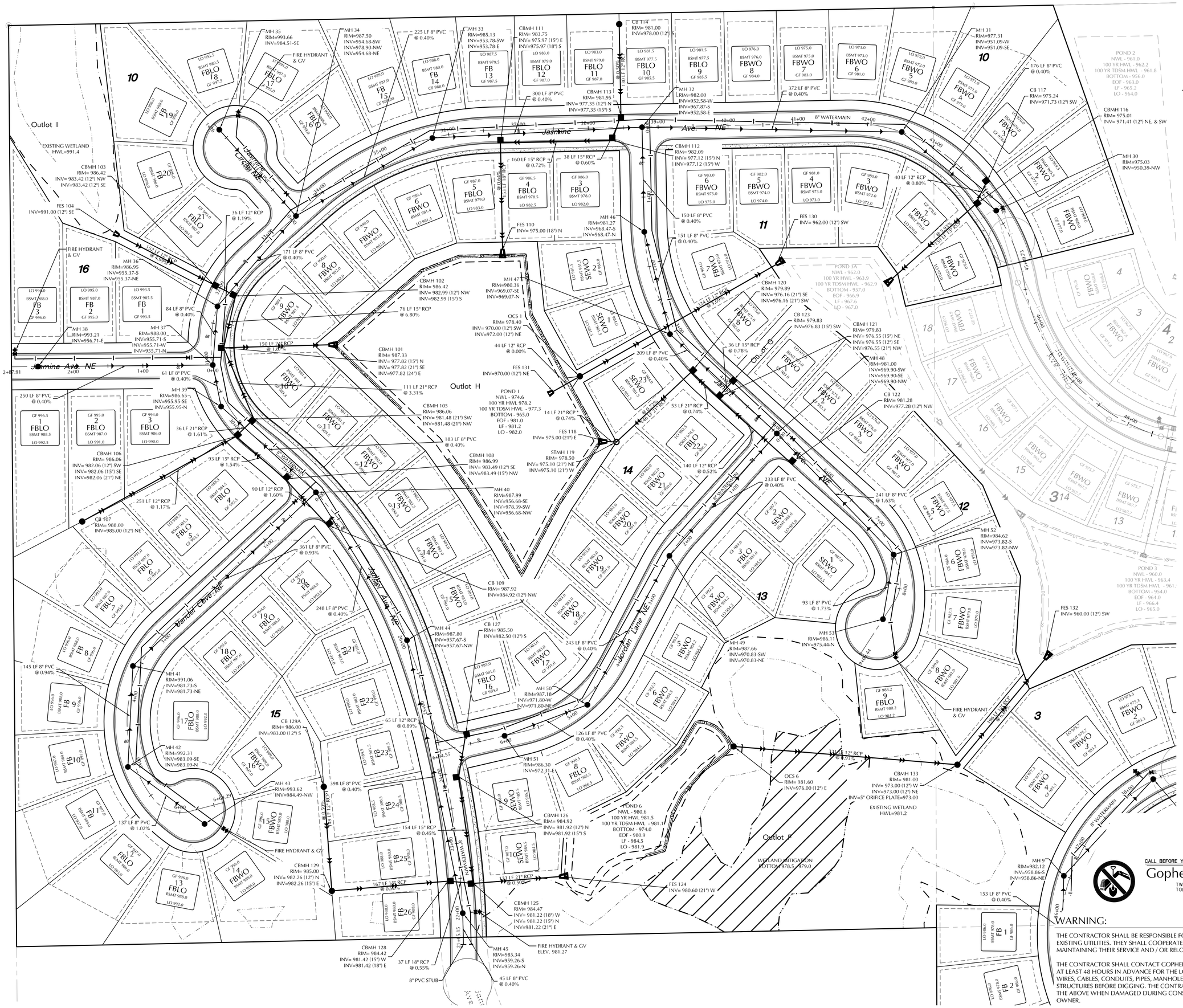

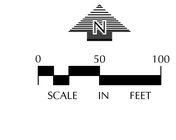

EXISTING	CIVIL LEGEND	PROPOSED
	SANITARY MANHOLE	
	STORM MANHOLE	
	CATCH BASIN	
	CULVERT	
	HYDRANT	
	GATEVALVE	
	POST INDICATOR VALVE	
	LIGHT POLE	
	POWER POLE	
	SIGN	
	BENCHMARK	
	SOIL BORINGS	
	WATER MANHOLE	
	TELEPHONE MANHOLE	
	UTILITY MANHOLE	
	ELECTRIC MANHOLE	
	WATER SERVICE	
	SANITARY SERVICE	
	HANDICAP PARKING	
	DIRECTION OF FLOW	
	SPOT ELEVATION	
	CONTOURS	
	SANITARY SEWER	
	STORM SEWER	
	WATERMAIN	
	FORCEMAIN	
	DRAINTILE	
	SILT FENCE	
	CURB & GUTTER	
	RETAINING WALL	
	TREELINE	
	EASEMENT LINE	
	SETBACK LINE	
	FENCE LINE	
	UNDERGROUND TELE	
	UNDERGROUND GAS	
	OVERHEAD UTILITY	

CROW RIVER HEIGHTS WEST FUTURE ADD.

HANOVER, MN

BACKES COMPANIES
11413 ASHBURY CIRCLE N.
CHAMPLIN, MN 55316
PHONE: (612) 369-7750
FAX (612) 566-1525

LOUCKS
PLANNING
CIVIL ENGINEERING
LAND SURVEYING
LANDSCAPE ARCHITECTURE
ENVIRONMENTAL
7200 Hemlock Lane, Suite 300
Maple Grove, MN 55369
763.424.5505
www.loucksinc.com

CADD QUALIFICATION

CADD files prepared by the Consultant for this project are instruments of the Consultant's professional services for use solely with respect to this project. These CADD files shall not be used on other projects, for additions to this project, or for completion of this project by others without written approval by the Consultant. With the Consultant's approval, others may be permitted to obtain copies of the CADD drawing files for information and reference only. All intentional or unintentional revisions, additions, or deletions to these CADD files shall be made at the full risk of that party making such revisions, additions or deletions and that party shall hold harmless and indemnify the Consultant from any & all responsibilities, claims, and liabilities.

SUBMITTAL/REVISIONS

04/20/18	CITY SUBMITTAL

PROFESSIONAL SIGNATURE

I hereby certify that this plan, specification, or report was prepared by me or under my direct supervision and that I am a duly Licensed Professional Engineer under the laws of the State of Minnesota.

PRELIMINARY

Licensed Name: Tim McLouth - PE
Date: License #: 20383

QUALITY CONTROL

Loucks Project No.	16101A
Project Lead	TWM
Drawn By	ZHW
Checked By	TWM
Review Date	04/02/18

SHEET INDEX

C0-1	COVER SHEET
C1-1	EXISTING CONDITIONS
C1-2	PRELIMINARY PLAT
C2-0 - C2-2	SITE PLAN
C3-0 - C3-2	GRADING PLAN
C3-3 - C3-5	SWPPP PLAN & NOTES
C4-0 - C4-2	UTILITY PLAN
C8-1 - C8-2	DETAILS
L0-1 - L0-3	TREE PRESERVATION
L0-4	TREE INVENTORY
L1-1 - L1-2	LANDSCAPE PLANS
L2-1	LANDSCAPE DETAILS

CALL BEFORE YOU DIG!

Gopher State One Call

TWIN CITY AREA: 651-454-0002
TOLL FREE: 1-800-252-1166

WARNING:

THE CONTRACTOR SHALL BE RESPONSIBLE FOR CALLING FOR LOCATIONS OF ALL EXISTING UTILITIES. THEY SHALL COOPERATE WITH ALL UTILITY COMPANIES IN MAINTAINING THEIR SERVICE AND / OR RELOCATION OF LINES.

THE CONTRACTOR SHALL CONTACT GOPHER STATE ONE CALL AT 651-454-0002 AT LEAST 48 HOURS IN ADVANCE FOR THE LOCATIONS OF ALL UNDERGROUND WIRES, CABLES, CONDUITS, PIPES, MANHOLES, VALVES OR OTHER BURIED STRUCTURES BEFORE DIGGING. THE CONTRACTOR SHALL REPAIR OR REPLACE THE ABOVE WHEN DAMAGED DURING CONSTRUCTION AT NO COST TO THE OWNER.

NORTH UTILITY PLAN

C4-1

Plotted: 04/19/2018 9:38 AM W:\2016\16101A\CADD DATA\CIVIL dwg Sheet Files\C4-1 UTILITY PLAN

EXISTING	CIVIL LEGEND	PROPOSED
	SANITARY MANHOLE	
	STORM MANHOLE	
	CATCH BASIN	
	CULVERT	
	HYDRANT	
	GATEVALVE	
	POST INDICATOR VALVE	
	LIGHT POLE	
	POWER POLE	
	SIGN	
	BENCHMARK	
	SOIL BORINGS	
	WATER MANHOLE	
	TELEPHONE MANHOLE	
	UTILITY MANHOLE	
	ELECTRIC MANHOLE	
	WATER SERVICE	
	SANITARY SERVICE	
	HANDICAP PARKING	
	DIRECTION OF FLOW	
	SPOT ELEVATION	
	CONTOURS	
	SANITARY SEWER	
	STORM SEWER	
	WATERMAIN	
	FORCEMAIN	
	DRAINTILE	
	SILT FENCE	
	CURB & GUTTER	
	RETAINING WALL	
	TREELINE	
	EASEMENT LINE	
	SETBACK LINE	
	FENCE LINE	
	UNDERGROUND TELE	
	UNDERGROUND GAS	
	OVERHEAD UTILITY	

0 50 100
SCALE IN FEET

CALL BEFORE YOU DIG!
Gopher State One Call
TWIN CITY AREA: 651-454-0002
TOLL FREE: 1-800-252-1166

WARNING:

THE CONTRACTOR SHALL BE RESPONSIBLE FOR CALLING FOR LOCATIONS OF ALL EXISTING UTILITIES. THEY SHALL COOPERATE WITH ALL UTILITY COMPANIES IN MAINTAINING THEIR SERVICE AND / OR RELOCATION OF LINES.

THE CONTRACTOR SHALL CONTACT GOPHER STATE ONE CALL AT 651-454-0002 AT LEAST 48 HOURS IN ADVANCE FOR THE LOCATIONS OF ALL UNDERGROUND WIRES, CABLES, CONDUITS, PIPES, MANHOLES, VALVES OR OTHER BURIED STRUCTURES BEFORE DIGGING. THE CONTRACTOR SHALL REPAIR OR REPLACE THE ABOVE WHEN DAMAGED DURING CONSTRUCTION AT NO COST TO THE OWNER.

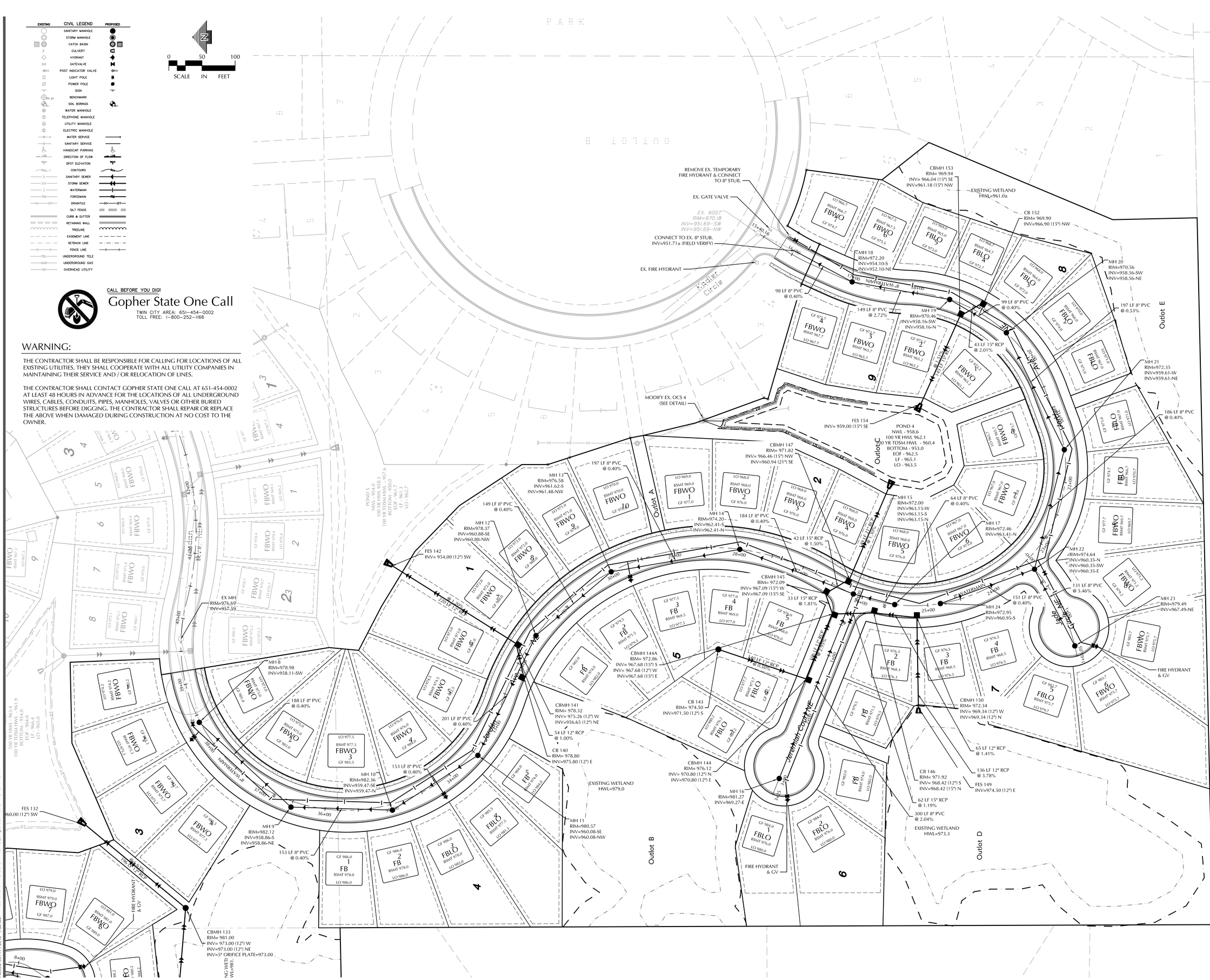

CROW RIVER HEIGHTS WEST FUTURE ADD.

HANOVER, MN

BACKES COMPANIES
11413 ASHBURY CIRCLE N.
CHAMPLIN, MN 55316
PHONE: (612) 369-7750
FAX (612) 566-1525

LOUCKS
PLANNING
CIVIL ENGINEERING
LAND SURVEYING
LANDSCAPE ARCHITECTURE
ENVIRONMENTAL
7200 Hemlock Lane, Suite 300
Maple Grove, MN 55369
763.424.5505
www.loucksinc.com

CADD QUALIFICATION

CADD files prepared by the Consultant for this project are instruments of the Consultant professional services for use solely with respect to this project. These CADD files shall not be used on other projects, for additions to this project, or for completion of this project by others without written approval by the Consultant. With the Consultant's approval, others may be permitted to obtain copies of the CADD drawing files for information and reference only. All intentional or unintentional revisions, additions, or deletions to these CADD files shall be made at the full risk of that party making such revisions, additions or deletions and that party shall hold harmless and indemnify the Consultant from any & all responsibilities, claims, and liabilities.

SUBMITTAL/REVISIONS

04/20/18	CITY SUBMITTAL

PROFESSIONAL SIGNATURE

I hereby certify that this plan, specification, or report was prepared by me or under my direct supervision and that I am a duly Licensed Professional Engineer under the laws of the State of Minnesota.

PRELIMINARY

Licensed Name	Todd W. Mattson - PE
Date	
License Number	20383

QUALITY CONTROL

Loucks Project No.	16101A
Project Lead	TWM
Drawn By	ZHW
Checked By	TWM
Review Date	04/02/18

SHEET INDEX

C0-1	COVER SHEET
C1-1	EXISTING CONDITIONS
C1-2	PRELIMINARY PLAT
C2-0 - C2-2	SITE PLAN
C3-0 - C3-2	GRADING PLAN
C3-3 - C3-5	SWPPP PLAN & NOTES
C4-0 - C4-2	UTILITY PLAN
C8-1 - C8-2	DETAILS
L0-1 - L0-3	TREE PRESERVATION
L0-4	TREE INVENTORY
L1-1 - L1-2	LANDSCAPE PLANS
L2-1	LANDSCAPE DETAILS

SOUTH UTILITY PLAN

C4-2

Plotted: 04/19/2018 9:38 AM W:\2016\16101A\CADD DATA\CIVIL\ dwg Sheet Files\C4-1 UTILITY PLAN

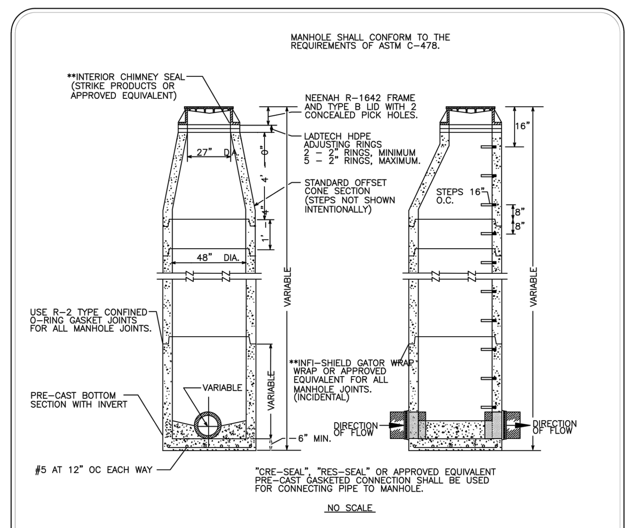

NOTES:
1. ALL CONNECTIONS TO EXISTING STRUCTURES SHALL BE CORE DRILLED
2. MANHOLE STEPS SHALL BE CAST IN ALUMINUM OR MA INDUSTRY WITH VINYL COATING OR APPROVED EQUIVALENT AND SHALL BE LOCATED ON THE DOWN STREAM SIDE OF MANHOLE
3. STEPS SHALL BE PLACED SO THAT THE OFFSET VERTICAL PORTION OF THE CONE IS FACING DOWN STREAM
4. MANHOLE COVERS SHALL BE CAST WITH THE WORDS "SANITARY SEWER"
5. THE INITIAL & FINAL RAISING OF CASTINGS SHALL BE CONSIDERED INCLUDED IN THE UNIT PRICE BID FOR CASTING THE ASSEMBLY
6. MAXIMUM DEPTH FROM TOP OF CASTING TO FIRST STEP SHALL NOT BE MORE THAN 16"
7. STEPS SHALL ALIGN WITH THE OPENING TO PROVIDE ACCESS TO THE MANHOLES
8. ALL SANITARY MANHOLES SHALL BE SEALED WITH INTERNAL MOLDED POLYMER SHIELD, SUCH AS "I/I BARRIER" AS MANUFACTURED BY STRIKE PRODUCTS APPROVED EQUIVALENT

Standard Plate Library City of Hanover — Title: Standard Manhole for Sanitary Sewer — Date: 01-16 — Plate No. SAN - 01

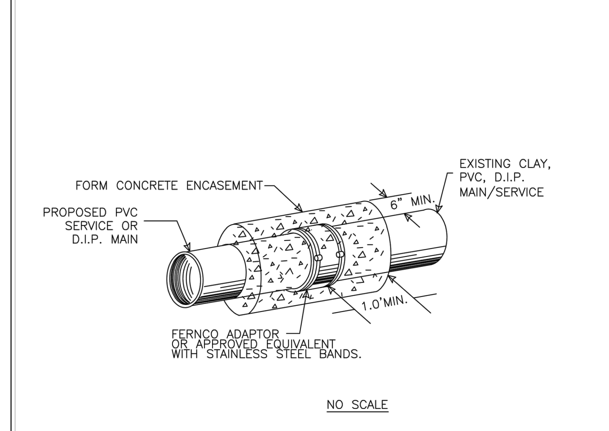

NOTES:
WRAP ADAPTER WITH POLYETHYLENE PRIOR TO ENCASEMENT WITH CONCRETE

Standard Plate Library City of Hanover — Title: Sanitary Sewer Main/Service Connection Detail — Date: 01-16 — Plate No. SAN - 05

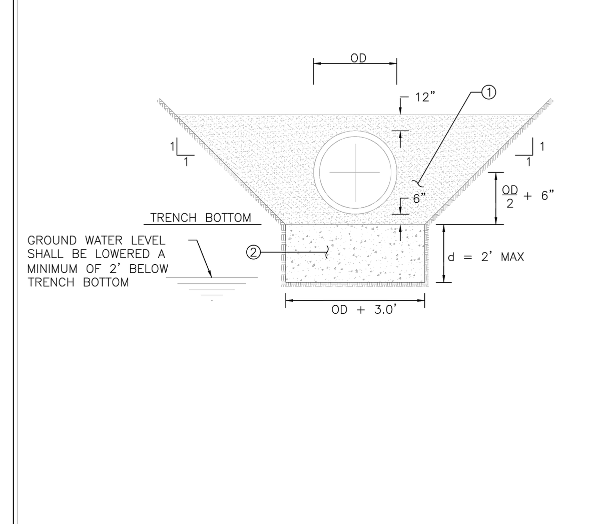

1. GRANULAR PIPE BEDDING MATERIAL (MNDOT SPEC 3149.2F) (INCIDENTAL)
2. 1½" CLEAR AGGREGATE BEDDING. TO BE USED ONLY IN AREAS AS DIRECTED BY ENGINEER. (NO PAYMENT WILL BE MADE WITHOUT PRIOR APPROVAL FROM THE ENGINEER)

Standard Plate Library City of Hanover — Title: PVC Pipe Bedding Detail — Date: 01-16 — Plate No. SAN - 06

NOTES:
1. Whenever service lines are installed in areas of high groundwater the last 5', as a minimum, are to be installed as a 45' riser to extend service line above groundwater level.
2. Metal fence post at end of water and sanitary service, 4' above grade. Water fence post to be painted blue. Sanitary fence post to be painted green.
3. Cleanouts are required every 100' on sanitary sewer services.

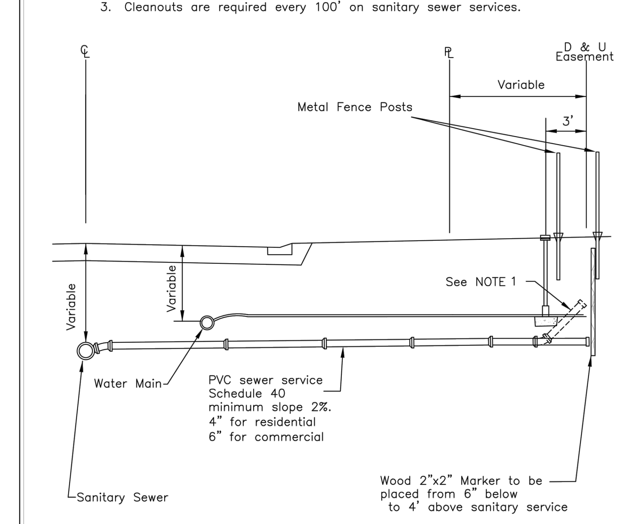

Standard Plate Library City of Hanover — Title: Sewer Service Connections — Date: 01-16 — Plate No. SAN - 10

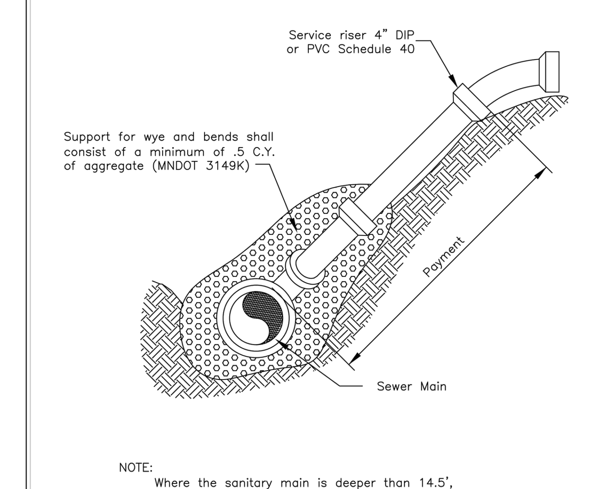

NOTE:
Where the sanitary main is deeper than 14.5', service risers shall be required.

Standard Plate Library City of Hanover — Title: Service Riser — Date: 01-16 — Plate No. SAN - 11

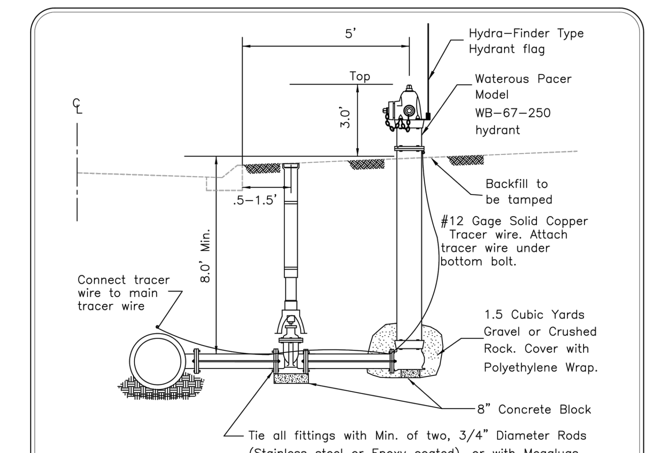

NOTE:
1. Factory installed plugs required whenever hydrants are installed in areas with high groundwater level, as determined by dewatering requirements and the City Engineer. The main nozzle shall be painted blue for all hydrants with plugged drain holes.
2. All ductile iron watermain fittings shall be fusion bonded epoxy coated.
3. Hydrants shall be marked with stainless steel tag from factory.
4. Contractor shall supply two hydrant flags, one to be installed on the hydrant and the second delivered to the Hanover Maintenance Facility.
5. All hydrant leads are to be constructed with Polywrapped DIP, Class 52.
6. All watermain bolts shall be ASTM F593 Type 316 Stainless Steel or approved equal.

Standard Plate Library City of Hanover — Title: Hydrant Detail — Date: 01-16 — Plate No. WAT - 01

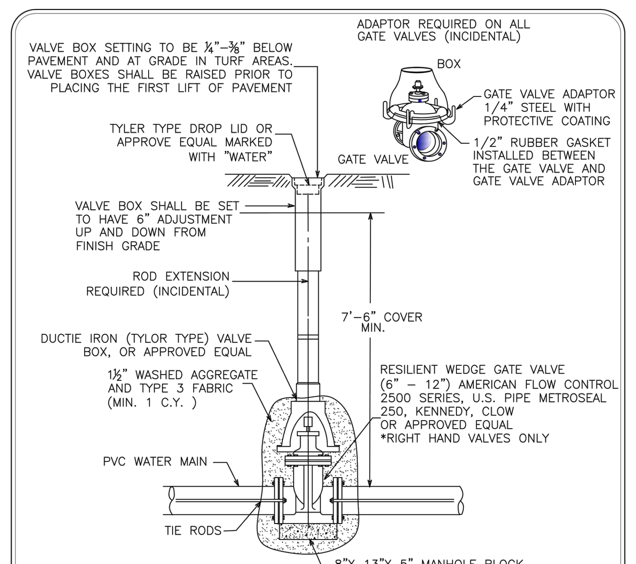

NOTES:
1. GATE VALVES SHOULD BE USED ON 6" THROUGH 12" WATERMAIN.
2. VALVE BOX INSERTS ARE NOT ALLOWED UNLESS APPROVED BY THE ENGINEER.
3. VALVE BOXES SHALL BE INSTALLED PLUMB AND SHALL ALLOW A 4" P.V.C. PIPE TO PASS ENTIRELY OVER THE GATE VALVE NUT AFTER INSTALLATION IS COMPLETE.
4. ALL VALVES SHALL BE TIED WITH 3/4" THREADED TIE RODS TO THE MAIN. MEGA LUGS MAY BE USED IN LIEU OF TIE RODS.
5. THE HEIGHT OF THE CAST IRON OR DUCTILE IRON ADJUSTMENT RING IS DETERMINED BY THE THICKNESS OF THE WEAR COURSE.
6. CAST IRON OR DUCTILE IRON ADJUSTMENT RINGS TO BE INSTALLED AS PER MANUFACTURE'S RECOMMENDATION.
7. THE INITIAL & FINAL RAISING OF VALVE BOXES SHALL BE CONSIDERED INCIDENTAL TO THE PROJECT.

Standard Plate Library City of Hanover — Title: Gate Valve and Box Installation — Date: 01-16 — Plate No. WAT - 02

NOTES:
1. All new curb boxes must have riser rods adjustable up and down for 7½' of cover. When an existing curb box is on a construction or reconstruction project, riser rods shall be installed to all curb boxes on that project.
2. Placement of curb stop and box on private streets shall be 10' back of curb with no copper stubbed past the curb stop and box.
3. Copper is to be one piece, no joints, couplings, etc., allowed from main to curb stop.
4. Water service and sanitary sewer service shall have a 3' horizontal separation.
5. Curb boxes located in driveways or parking lots shall be covered with a ford A-1 meter box cover.
6. Metal fence post at end of water and sanitary service, 4' above grade Water fence post to be painted blue. Sanitary fence post to be painted green.
7. Copper size (C.T.S.) polyethylene service tubing sized per plan.
8. HDPE is to be one piece, no joints, couplings, etc. allowed from main to stop. Backfill material shall be granualar bedding material, free of stones.
9. Tracer wire, #10 AWG solid copper wire with U.S.E. rated insulation.

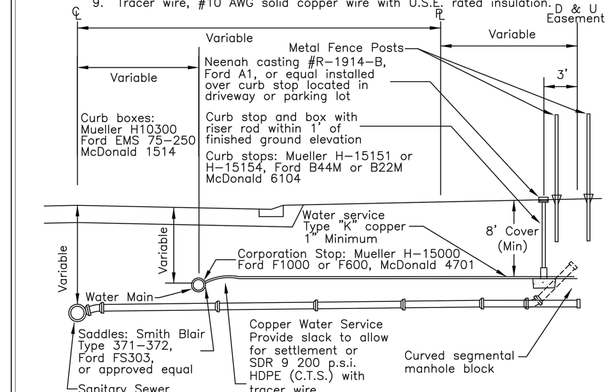

Standard Plate Library City of Hanover — Title: Water Service Connections — Date: 01-16 — Plate No. WAT - 04

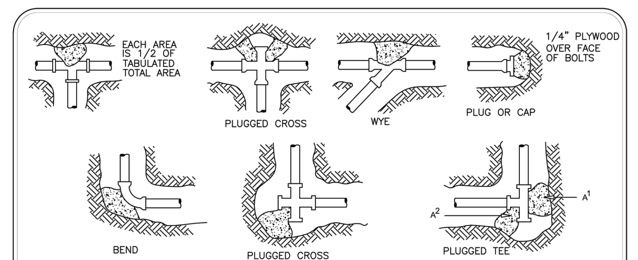

NOMINAL FITTING SIZE, INCHES	TEE, WYE, PLUG OR CAP	90° BEND, PLUGGED CROSS	TEE PLUGGED ON RUN A1	TEE PLUGGED ON RUN A2	45° BEND	22-1/2° BEND	11-1/4° BEND
4	1.0	1.4	1.9	1.4	1.0	–	–
6	2.1	3.0	4.3	3.0	1.6	1.0	–
8	3.8	5.3	7.6	5.4	2.9	1.5	1.0
10	5.9	8.4	11.8	8.4	4.6	2.6	1.2
12	8.5	12.0	17.0	12.0	6.6	3.4	1.7
14	11.5	16.3	23.0	16.3	8.9	4.6	2.3
16	15.0	21.3	30.0	21.3	11.6	6.0	3.0
18	19.0	27.0	38.0	27.0	14.6	7.6	3.8
20	23.5	33.3	47.0	33.3	18.1	9.4	4.7
24	34.0	48.0	68.0	48.0	26.2	13.6	6.8

NOTES:
1. CONCRETE THRUST BLOCKING TO BE POURED AGAINST UNDISTURBED EARTH.
2. KEEP CONCRETE CLEAR OF JOINT AND ACCESSORIES.
3. REQUIRED BEARING AREAS AT FITTING SHALL BE AS NOTED ABOVE, UNLESS INDICATED OTHERWISE.
4. BEARING AREAS AND SPECIAL BLOCKING DETAILS SHOWN ON THE PLANS TAKE PRECEDENCE OVER BEARING AREAS AND BLOCKING DETAILS SHOWN ON THIS STANDARD PLATE.
5. ABOVE BEARING AREAS BASED ON TEST PRESSURES OF 150 PSI AND AN ALLOWABLE SOIL BEARING STRESS OF 2000 LBS. PER SQUARE FOOT. TO COMPUTE BEARING AREAS FOR DIFFERENT TEST PRESSURES AND SOIL BEARING STRESSES, USE THE FOLLOWING EQUATION: BEARING AREA = (TEST PRESSURE/150) X (2000/SOIL BEARING STRESS) X (TABLE VALUE).

Standard Plate Library City of Hanover — Title: Poured Concrete Thrust Blocking for Watermain — Date: 01-16 — Plate No. WAT - 05

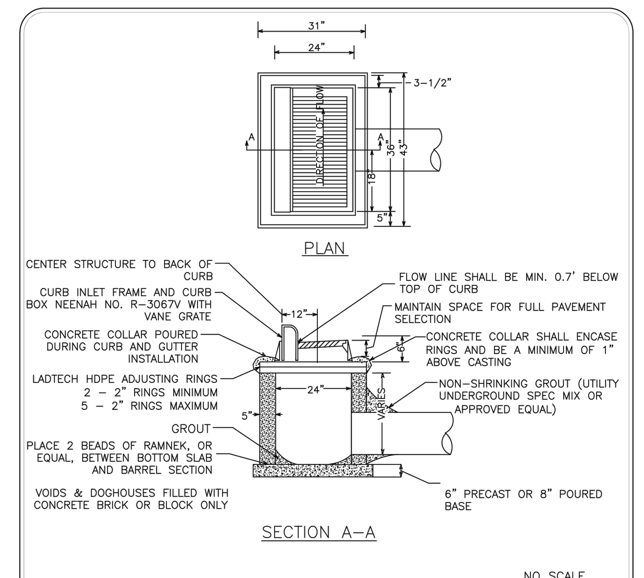

NOTES:
1. REINFORCING TO CONSIST OF #4 BARS @ 8" O.C., 4' MINIMUM LENGTH, EACH SIDE OF CASTING
2. GROUT BOTTOM TO DRAIN TO CENTER
3. PIPE CUT-OUTS TO BE LOCATED WHERE REQUIRED
4. INLET PROTECTION TO BE INSTALLED IN CATCH BASIN AND MAINTAINED AS DIRECTED BY THE ENGINEER

Standard Plate Library City of Hanover — Title: Standard Catch Basin — Date: 01-16 — Plate No. STO - 01

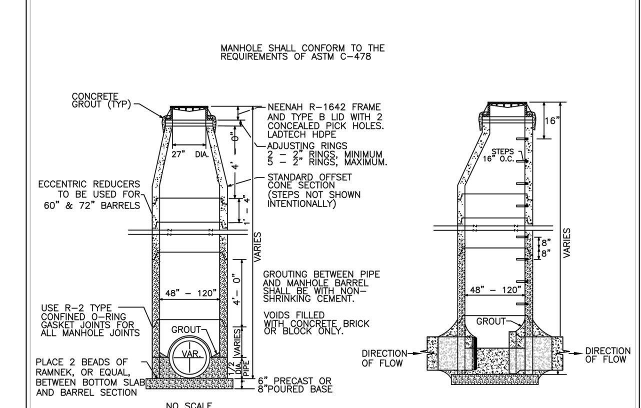

NOTES:
1. MANHOLE STEPS SHALL BE CAST ALUMINUM OR MA INDUSTRY WITH VINYL COATING OR APPROVED EQUIVALENT AND SHALL BE LOCATED ON THE DOWN STREAM SIDE OF THE MANHOLE
2. STEPS SHALL BE PLACED SO THAT THE OFFSET VERTICAL PORTION OF THE CONE IS FACING DOWN STREAM
3. MANHOLE COVER SHALL BE CAST WITH THE WORDS "STORM SEWER"
4. THE INITIAL AND FINAL RAISING OF CASTINGS SHALL BE CONSIDERED INCIDENTAL TO THE PROJECT
5. MAXIMUM DEPTH FROM TOP OF CASTING TO FIRST STEP SHALL NOT BE MORE THAN 16"
6. STEPS SHALL ALIGN WITH THE OPENING TO PROVIDE ACCESS TO THE MANHOLE

Standard Plate Library City of Hanover — Title: Standard Manhole for Storm Drain — Date: 01-16 — Plate No. STO - 02

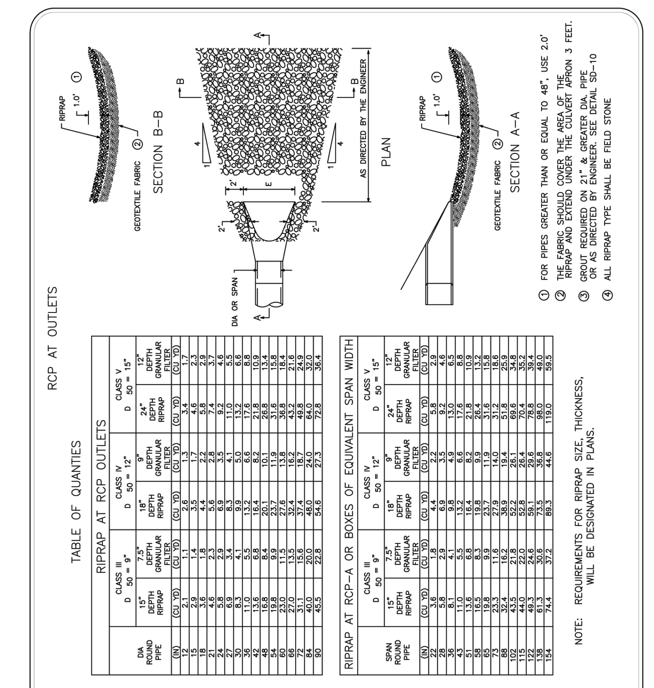

Standard Plate Library City of Hanover — Title: Riprap Detail — Date: 01-16 — Plate No. STO - 04

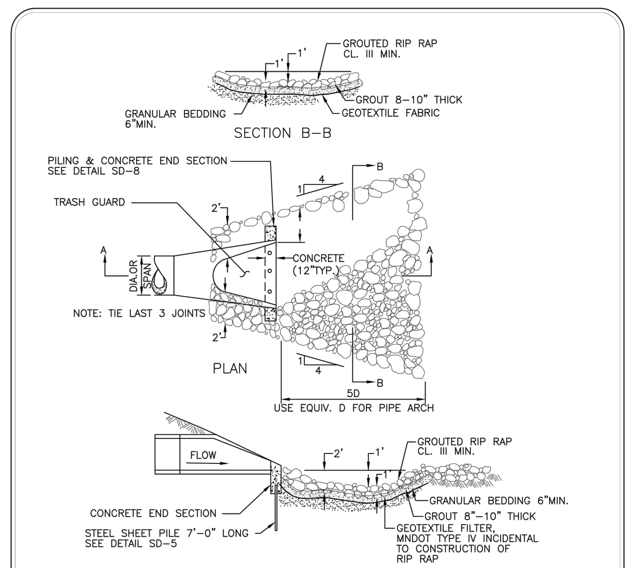

NOTE:
1. CONCRETE GROUT MATERIAL WILL BE USED ON ALL PIPE OUTLETS 21" DIA. OR LARGER.
2. PLACE RIPRAP INTO THE CONCRETE GROUT AFTER THE GROUT HAS BEEN PLACED AT A 8"-10" UNIFORM DEPTH.
3. DIMENSIONS AND C.Y. OF CONCRETE WILL BE DETERMINED BY ENGINEER.

Standard Plate Library City of Hanover — Title: Grouted Riprap at Outlets — Date: 01-16 — Plate No. STO - 05

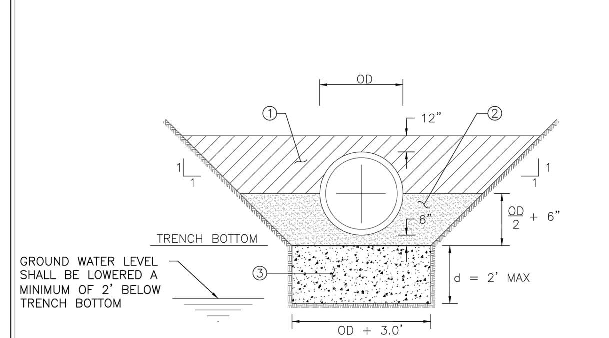

NOTES:
1. SELECTED MATERIAL (MNDOT SPEC 2451.3D) (INCIDENTAL)
2. GRANULAR PIPE BEDDING MATERIAL (MNDOT SPEC 3149.2F) (INCIDENTAL)
3. 1½" CLEAR AGGREGATE BEDDING. TO BE USED ONLY IN AREAS AS DIRECTED BY ENGINEER. (NO PAYMENT WILL BE MADE WITHOUT PRIOR APPROVAL FROM THE ENGINEER)

Standard Plate Library City of Hanover — Title: RCP Pipe Bedding Detail — Date: 01-16 — Plate No. STO - 07

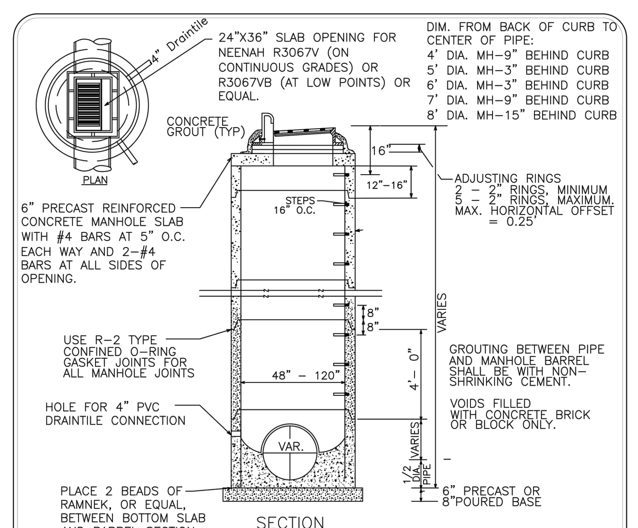

NOTES:
1. MANHOLE STEPS SHALL BE CAST ALUMINUM OR MA INDUSTRY WITH VINYL COATING OR APPROVED EQUIVALENT AND SHALL BE LOCATED ON THE DOWN STREAM SIDE OF THE MANHOLE
2. STEPS SHALL BE PLACED SO THAT THE OFFSET VERTICAL PORTION OF THE CONE IS FACING DOWN STREAM
3. MANHOLE COVER SHALL BE CAST WITH THE WORDS "STORM SEWER"
4. THE INITIAL AND FINAL RAISING OF CASTINGS SHALL BE CONSIDERED INCIDENTAL TO THE PROJECT
5. MAXIMUM DEPTH FROM TOP OF CASTING TO FIRST STEP SHALL NOT BE MORE THAN 16"
6. STEPS SHALL ALIGN WITH THE OPENING TO PROVIDE ACCESS TO THE MANHOLE
7. TOP BARREL SECTION BELOW TOP SLAB TO HAVE FLAT TOP EDGE SEALED WITH 2 BEADS OF RAMNEK OR EQUAL.

Standard Plate Library City of Hanover — Title: Catch Basin Manhole Type II — Date: 01-16 — Plate No. STO - 10

SEE CITY PLATE NO. STO-09 FOR RIPRAP PLACEMENT.

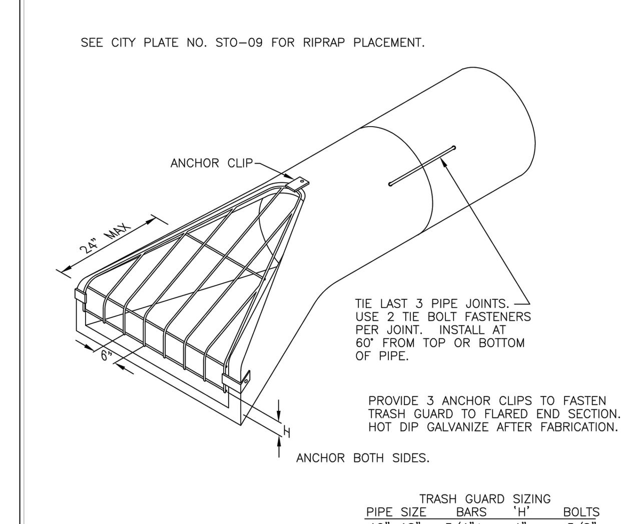

TRASH GUARD SIZING

PIPE SIZE	BARS	'H'	BOLTS
12"-18"	3/4"ø	4"	5/8"
21"-42"	1"ø	6"	3/4"
48"-72"	1 1/4"ø	12"	1"

Standard Plate Library City of Hanover — Title: Flared End Section And Trash Guard — Date: 01-16 — Plate No. STO - 14

NOTE:
BARRICADE AS PER MNDOT STANDARD DETAILS

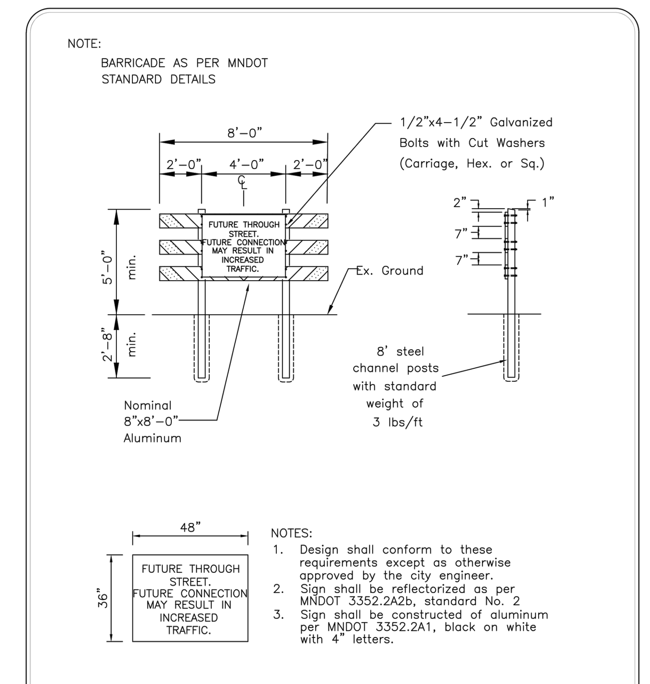

NOTES:
1. Design shall conform to these requirements except as otherwise approved by the city engineer.
2. Sign shall be reflectorized as per MNDOT 3352.2A2b, standard No. 2
3. Sign shall be constructed of aluminum per MNDOT 3352.2A1, black on white with 4" letters.

Standard Plate Library City of Hanover — Title: Future Through Street Sign — Date: 01-16 — Plate No. STR - 21

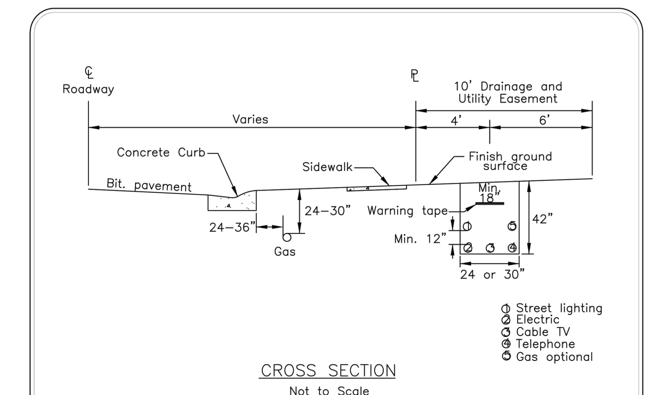

NOTE:
1. All conduit crossings under roadways shall be the contractors responsibility to install the correct size and number for all utilities. The contractor shall also install one additional conduit crossing for future use.
2. The City recommends joint trenching for installation of utilities within City right of way and utility easements. Gas can be placed in a separate trench located behind the curb. All trenches shall be compacted.
3. All curb stops and boxes will be located 3' from the Drainage & Utility Easement.
4. All curb stops and boxes shall be placed 10' from back of curb on private streets that have no City right of way beyond the curb.
5. All sewer clean outs shall be placed on front property lines see City plate SAN-10.
6. Street lights shall be placed as close to 300' intervals as possible in residential areas and located on property corners. All street light electrical lines shall be ruggedized type wiring or encased in conduit and placed within the joint trench.
7. Center of utility trench in private streets shall be 7' from back of curb. Gas can be placed 2-3' from back of curb.
8. All utility boxes shall be placed on common property corners.

Standard Plate Library City of Hanover — Title: Utility Layout — Date: 01-16 — Plate No. STR - 22

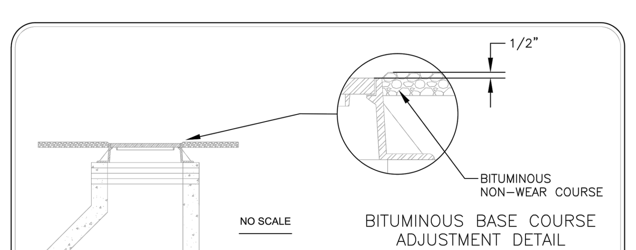

NOTES:
1. ALL CASTINGS AND INFILTRATION BARRIERS SHALL BE INSTALLED AS DETAILED ABOVE PRIOR TO PLACEMENT OF THE FIRST LIFT BITUMINOUS PAVEMENT

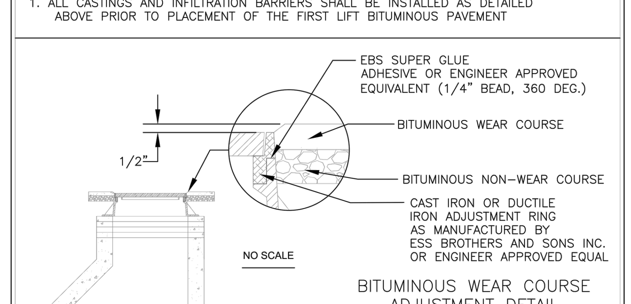

NOTES:
1. THE HEIGHT OF THE CAST IRON OR DUCTILE IRON ADJUSTMENT RING IS DETERMINED BY THE THICKNESS OF THE WEAR COURSE.
2. CAST IRON OR DUCTILE IRON ADJUSTMENT RINGS TO BE INSTALLED AS PER MANUFACTURE'S RECOMMENDATION.
3. AFTER INSTALLATION OF ADJUSTMENT RING, TRAFFIC BARREL SHALL BE PLACED ON STRUCTURE UNTIL WEAR COURSE IS INSTALLED (INCIDENTAL).

Standard Plate Library City of Hanover — Title: Casting Adjustment Detail — Date: 01-16 — Plate No. STR - 13

FUTURE SEWER AND WATER LINES ARE TO BE EXTENDED BEYOND THE END OF THE STREET.
A HYDRANT & GATE VALVE SHALL BE PLACED AT THE END OF THE WATERMAIN.

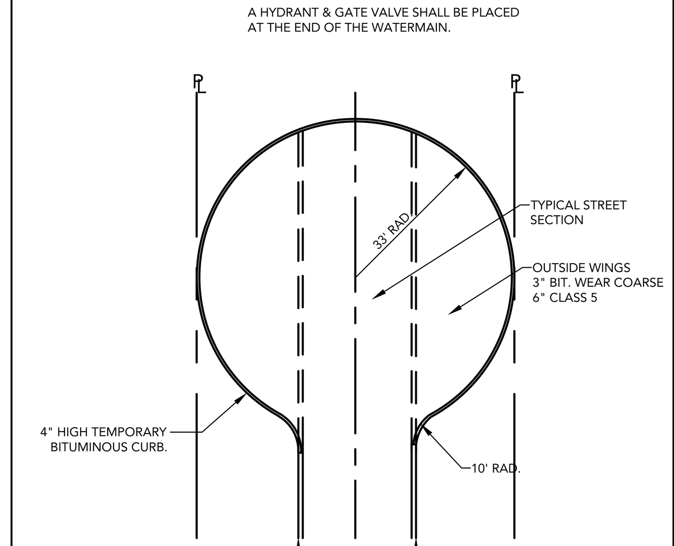

ALL TEMPORARY CUL-DE-SACS SHALL CONFORM TO TYPICAL STREET SECTION DETAILS.

EXTEND SEWER/ WATER SERVICES 15' BEYOND THE TEMP. BIT. CUL-DE-SAC. IF REQUIRED, INSTALL BARRICADES 10' BEYOND BITUMINOUS EDGE.

LOUCKS — TEMPORARY BITUMINOUS CUL-DE-SAC — LOUCKS PLATE NO. CUSTOM — DRAWN 7/2017

OUTLET CONTROL STRUCTURE ELEVATION TABLE

OCS NO.	A	B	C	D	E	F	G
OCS 1	968.0	972.1	970.00	978.4	978.4	48"	975.0

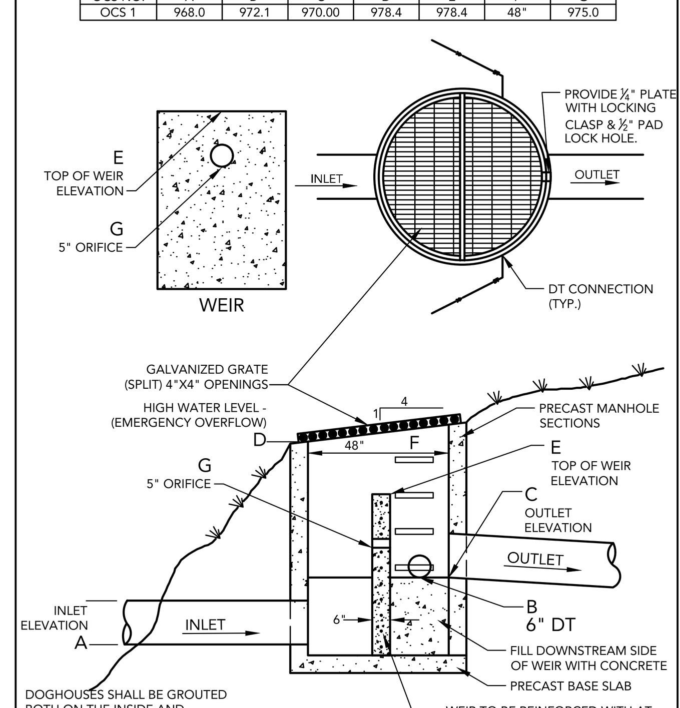

LOUCKS — OCS 1 — LOUCKS PLATE NO. - — DRAWN 4/2017

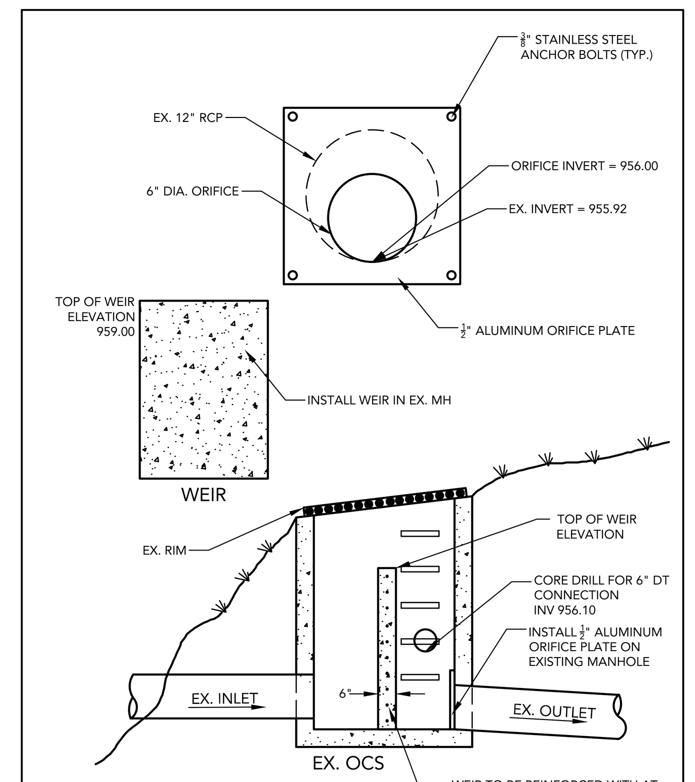

LOUCKS — EXISTING OCS - POND 4 MODIFICATION — LOUCKS PLATE NO. - — DRAWN 4/2018

OUTLET CONTROL STRUCTURE ELEVATION TABLE

OCS NO.	A	B	C	D	F
OCS 1	N/A	978.10	976.00	981.60	48"

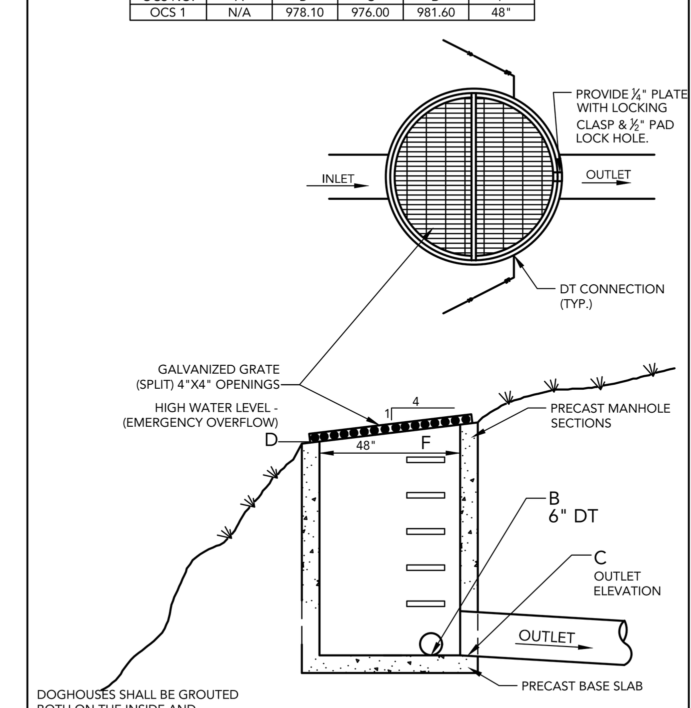

LOUCKS — OCS 6 — LOUCKS PLATE NO. - — DRAWN 4/2017

CATCH BASIN MANHOLE STRUCTURE ELEVATION TABLE

MH NO.	A	B	C	D	E
OCS 133	973.00	973.00	973.00	980.00	48"

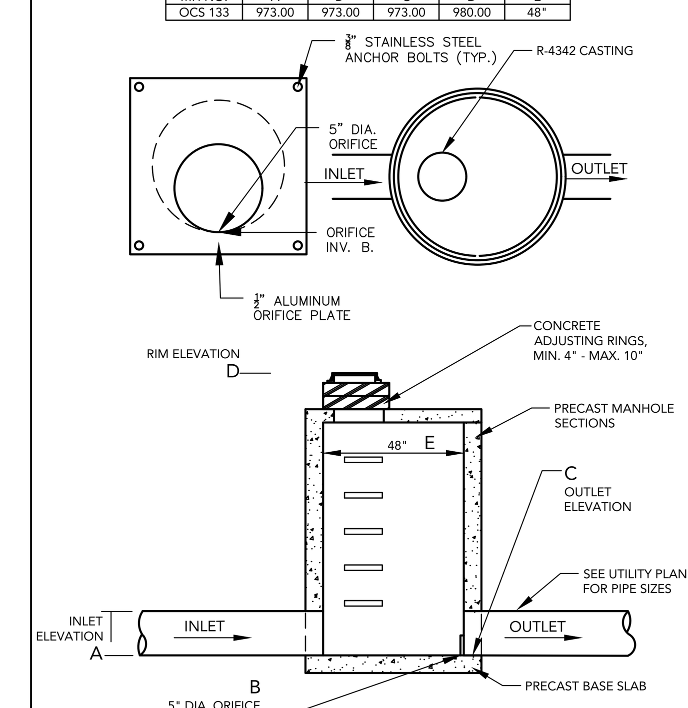

LOUCKS — CBMH 133 — LOUCKS PLATE NO. - — DRAWN 02/2017

CROW RIVER HEIGHTS WEST FUTURE ADD.

HANOVER, MN

BACKES COMPANIES
11413 ASHBURY CIRCLE N.
CHAMPLIN, MN 55316
PHONE: (612) 369-7750
FAX (612) 566-1525

LOUCKS
PLANNING
CIVIL ENGINEERING
LAND SURVEYING
LANDSCAPE ARCHITECTURE
ENVIRONMENTAL
7200 Hemlock Lane, Suite 300
Maple Grove, MN 55369
763.424.5505
www.loucksinc.com

CADD QUALIFICATION
CADD files prepared by the Consultant for this project are instruments of the Consultant professional services for use solely with respect to this project. These CADD files shall not be used on other projects, for additions to this project, or for completion of this project by others without written approval by the Consultant. With the Consultant's approval, others may be permitted to obtain copies of the CADD drawing files for information and reference only. All intentional or unintentional revisions, additions, or deletions to these CADD files shall be made at the full risk of that party making such revisions, additions or deletions and that party shall hold harmless and indemnify the Consultant from any & all responsibilities, claims, and liabilities.

SUBMITTAL/REVISIONS
04/20/18 CITY SUBMITTAL

PROFESSIONAL SIGNATURE
I hereby certify that this plan, specification or report was prepared by me or under my direct supervision and that I am a duly Licensed Professional Engineer under the laws of the State of Minnesota.

PRELIMINARY

License No. ... W. McLouth - PE 20383
Date

QUALITY CONTROL

Loucks Project No.	16101A
Project Lead	TWM
Drawn By	ZHW
Checked By	TWM
Review Date	04/02/18

SHEET INDEX

C0-1 COVER SHEET
C1-1 EXISTING CONDITIONS
C1-2 PRELIMINARY PLAT
C2-0 - C2-2 SITE PLAN
C3-0 - C3-2 GRADING PLAN
C3-3 - C3-5 SWPPP PLAN & NOTES
C4-0 - C4-2 UTILITY PLAN
C8-1 - C8-2 DETAILS
L0-1 - L0-3 TREE PRESERVATION
L0-4 TREE INVENTORY
L1-1 - L1-2 LANDSCAPE PLANS
L2-1 LANDSCAPE DETAILS

DETAILS

C8-1

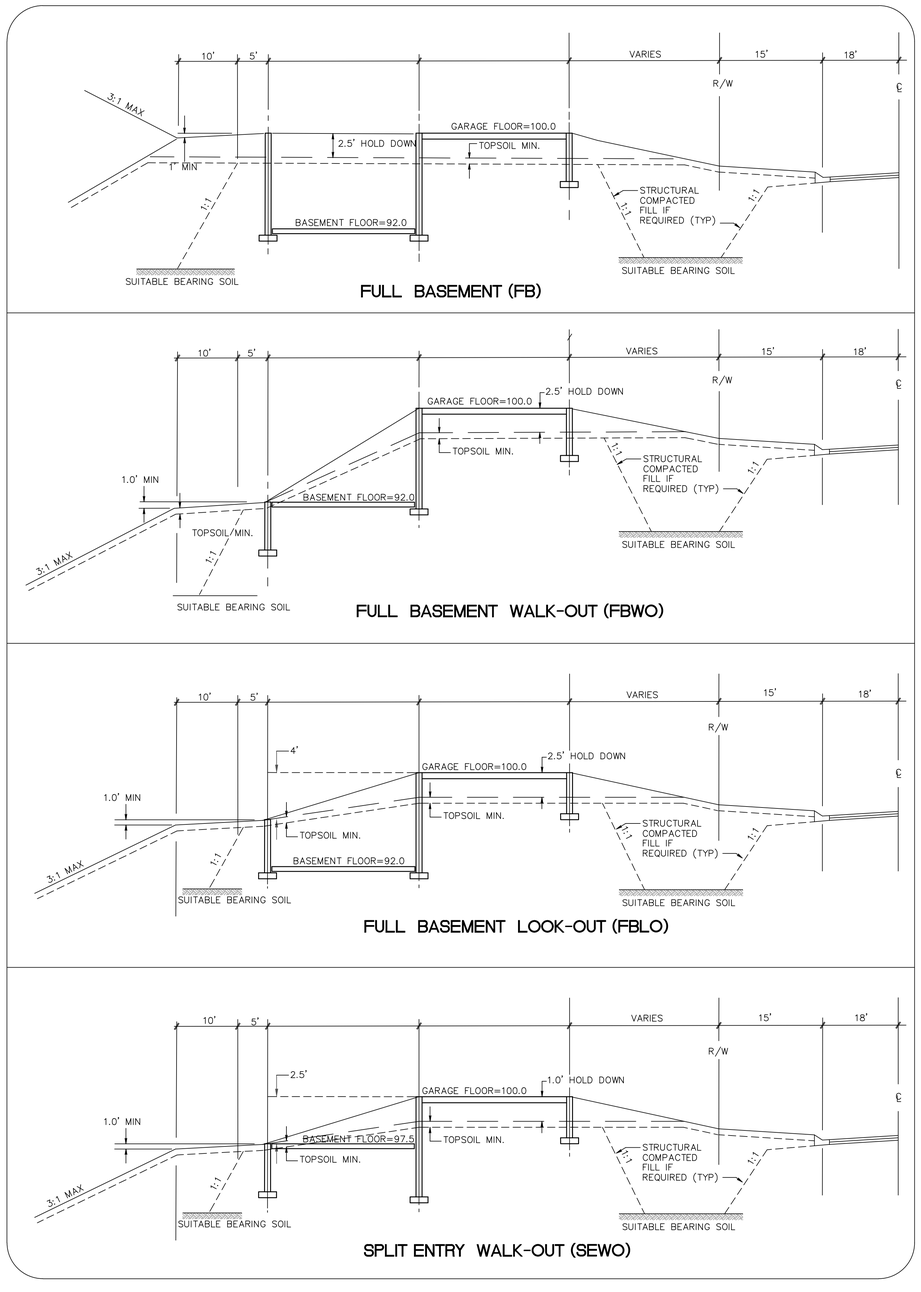

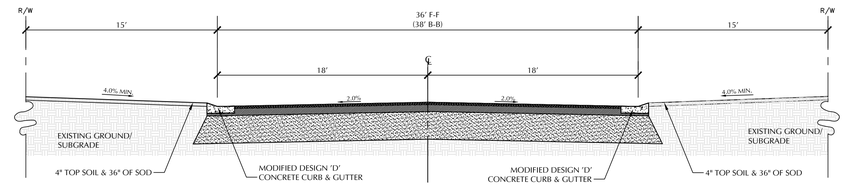

TYPICAL STREET SECTION
NOT TO SCALE

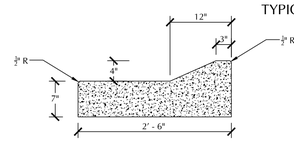

MODIFIED DESIGN 'D' CURB & GUTTER

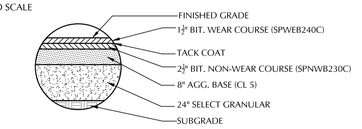

TYPICAL RESIDENTIAL STREET BITUMINOUS SECTION

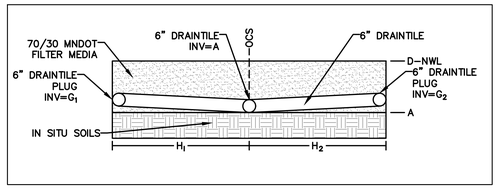

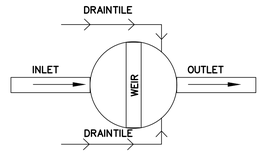

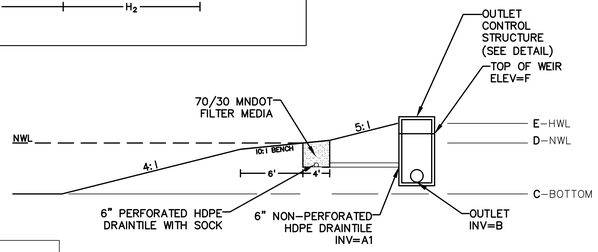

POND & FILTRATION BENCH DETAIL

POND & FILTRATION BENCH ELEVATION TABLE

POND NO	A	A1	B	C	D	E	F	G_1	G_2	H_1	H_2
POND 1	972.60	971.10	970.00	965.00	974.60	978.20	978.40	973.10	973.10	635	502
POND 4	956.60	956.10	955.92	953.00	958.60	962.10	959.00	957.10	957.10	244	245
POND 6	978.60	978.10	976.00	974.00	980.60	981.50	N/A	979.10	979.10	204	144

CROW RIVER HEIGHTS WEST FUTURE ADD.

HANOVER, MN

BACKES COMPANIES
11413 ASHBURY CIRCLE N.
CHAMPLIN, MN 55316
PHONE: (612) 369-7750
FAX (612) 566-1525

LOUCKS
PLANNING
CIVIL ENGINEERING
LAND SURVEYING
LANDSCAPE ARCHITECTURE
ENVIRONMENTAL
7200 Hemlock Lane, Suite 300
Maple Grove, MN 55369
763.424.5505
www.loucksinc.com

CADD QUALIFICATION

CADD files prepared by the Consultant for this project are instruments of the Consultant professional services for use solely with respect to this project. These CADD files shall not be used on other projects, for additions to this project, or for completion of this project by others without written approval by the Consultant. With the exception of such use as so approved, the Consultant makes no warranty of the CADD computer files or information in reference to any. All intentional or unintentional revisions, additions, or deletions to these CADD files shall be made at the full risk of that party making such revisions, additions or deletions and that party shall hold harmless and indemnify the Consultant from any & all responsibilities, claims, and liabilities.

SUBMITTAL/REVISIONS

04/20/18 CITY SUBMITTAL

PROFESSIONAL SIGNATURE

I hereby certify that this plan, specification, or report was prepared by me or under my direct supervision and that I am a duly Licensed Professional Engineer under the laws of the State of Minnesota.

PRELIMINARY

License No. 20383
Date

QUALITY CONTROL

Loucks Project No.	16101A
Project Lead	TWM
Drawn By	ZHW
Checked By	TWM
Review Date	04/02/18

SHEET INDEX

C0-1 COVER SHEET
C1-1 EXISTING CONDITIONS
C1-2 PRELIMINARY PLAT
C2-0 - C2-2 SITE PLAN
C3-0 - C3-2 GRADING PLAN
C3-3 - C3-5 SWPPP PLAN & NOTES
C4-0 - C4-2 UTILITY PLAN
C8-1 - C8-2 DETAILS
L0-1 - L0-3 TREE PRESERVATION
L0-4 TREE INVENTORY
L1-1 - L1-2 LANDSCAPE PLANS
L2-1 LANDSCAPE DETAILS

DETAILS

C8-2

Plotted: 04 /18 / 2018 8:27 AM W:\2016\16101A\CADD DATA\CIVIL_dwg Sheet Files\C8-1 DETAILS

TREE INVENTORY / REPLACEMENT - OVERALL SITE

	TOTAL TREES	TOTAL CAL. IN.
TOTAL SIGNIFICANT TREES ON-SITE	771	9,260.0 CAL. IN.
TREES TO BE SAVED	95	1,268.5 CAL. IN.
TREES TO BE REMOVED	676	7,991.5 CAL. IN.
TOTAL TREES TO BE MITIGATED	676	
PROPOSED POND SLOPE TREES - 12 TREES / ACRE PROPOSED LOT TREES - 2 TREES PER LOT	34 318	
TOTAL PROPOSED TREES	352	

TREE PROTECTION BOUNDARY - INSTALL SNOW FENCING OR POLYETHYLENE LAMINAR SAFETY NETTING AT DRIP LINE OF ALL TREES TO BE SAVED

N

0 100 200

SCALE IN FEET

CROW RIVER HEIGHTS WEST FUTURE ADD.

HANOVER, MN

BACKES COMPANIES
11413 ASHBURY CIRCLE N.
CHAMPLIN, MN 55316
PHONE: (612) 369-7750
FAX (612) 566-1525

LOUCKS
PLANNING
CIVIL ENGINEERING
LAND SURVEYING
LANDSCAPE ARCHITECTURE
ENVIRONMENTAL
7200 Hemlock Lane, Suite 300
Maple Grove, MN 55369
763.424.5505
www.loucksinc.com

CADD QUALIFICATION

CADD files prepared by the Consultant for this project are instruments of the Consultant's professional services for use solely with respect to this project. These CADD files shall not be used on other projects, for additions to this project, or for completion of this project by others without written approval by the Consultant. All CADD files are instruments of service of the Consultant, who shall retain ownership of the CADD drawing files. The information in electronic form by ATA translation or conversion, revisions, additions, or deletions to these CADD files shall be made at the full risk of that party making such revisions, additions or deletions and that party shall hold harmless and indemnify the Consultant from any & all responsibilities, claims, and liabilities.

SUBMITTAL/REVISIONS

04/20/18 CITY SUBMITTAL

PROFESSIONAL SIGNATURE

I hereby certify that this plan, specification or report was prepared by me or under my direct supervision and that I am a duly Licensed Professional Engineer under the laws of the State of Minnesota.

PRELIMINARY

License Number 20383

Date

QUALITY CONTROL

Loucks Project No.	16101A
Project Lead	TWM
Drawn By	ZHW
Checked By	TWM
Review Date	04/02/18

SHEET INDEX

C0-1 ..... COVER SHEET
C1-1 ..... EXISTING CONDITIONS
C1-2 ..... PRELIMINARY PLAT
C2-0 - C2-2 ..... SITE PLAN
C3-0 - C3-2 ..... GRADING PLAN
C3-3 - C3-5 ..... SWPPP PLAN & NOTES
C4-0 - C4-2 ..... UTILITY PLAN
C8-1 - C8-2 ..... DETAILS
L0-1 - L0-3 ..... TREE PRESERVATION
L0-4 ..... TREE INVENTORY
L1-1 - L1-2 ..... LANDSCAPE PLANS
L2-1 ..... LANDSCAPE DETAILS

OVERALL TREE PRESERVATION PLAN

L0-1

Plotted: 04 /18 /2018 11:8 AM W:\2016\16101A\CADD DATA\LANDSCAPE_dwg Sheet Files - 4-A Addition\16101A L0-1 Tree Preservation

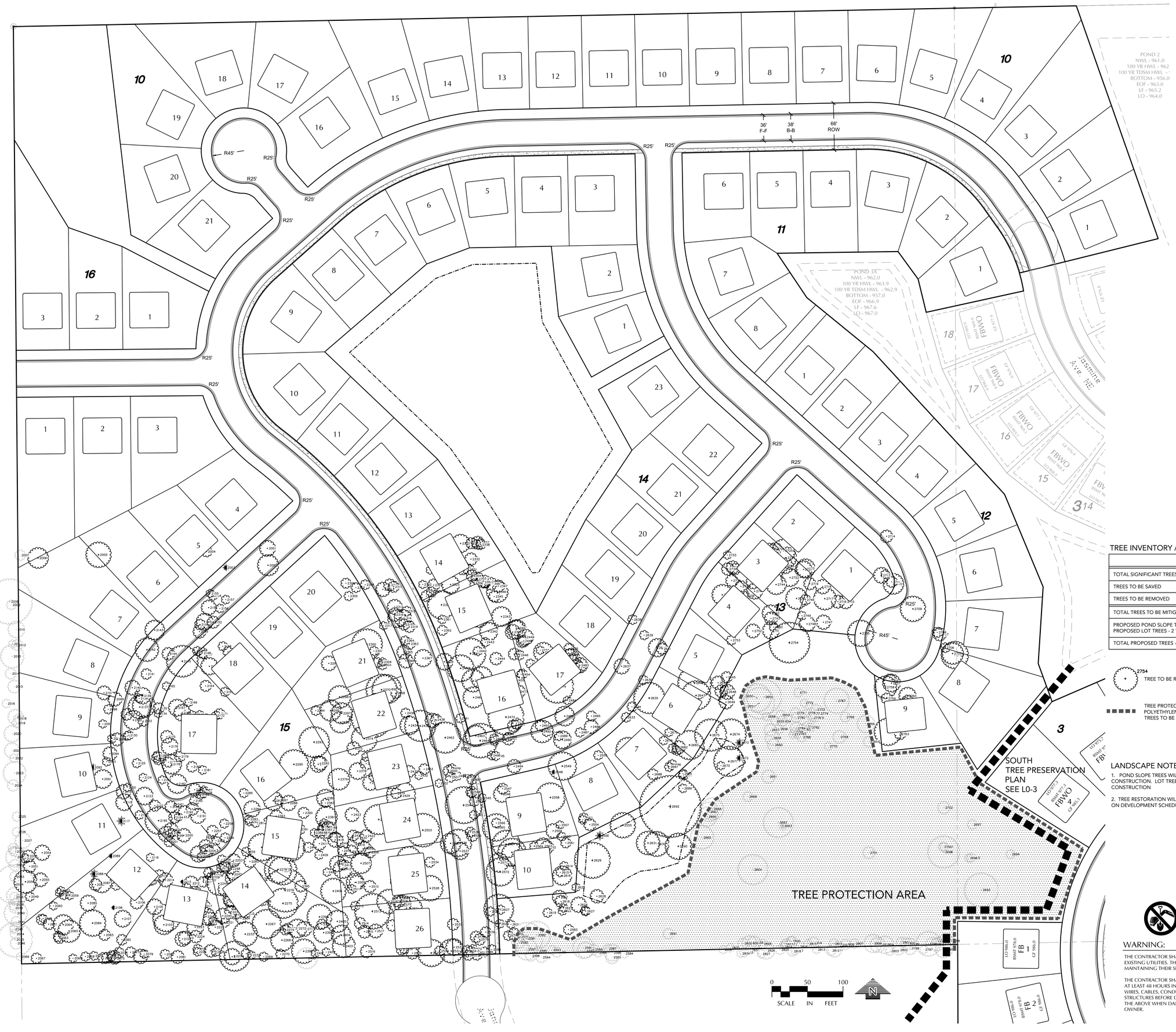

TREE INVENTORY / REPLACEMENT - NORTH

	TOTAL TREES	TOTAL CAL. IN.
TOTAL SIGNIFICANT TREES ON-SITE	771	9,260.0 CAL. IN.
TREES TO BE SAVED	95	1,268.5 CAL. IN.
TREES TO BE REMOVED	676	7,991.5 CAL. IN.
TOTAL TREES TO BE MITIGATED -	676	
PROPOSED POND SLOPE TREES - 12 TREES / ACRE PROPOSED LOT TREES - 2 TREES PER LOT	27 200	
TOTAL PROPOSED TREES - NORTH	227	

2754 — TREE TO BE REMOVED - SEE SHEET L0-4

TREE PROTECTION BOUNDARY - INSTALL SNOW FENCING OR POLYETHYLENE LAMINAR SAFETY NETTING AT DRIP LINE OF ALL TREES TO BE SAVED

LANDSCAPE NOTES

1. POND SLOPE TREES WILL BE PLANTED AT TIME OF GRADING AND ROAD CONSTRUCTION. LOT TREES AND SHRUBS WILL BE PLANTED AT TIME OF BUILDING CONSTRUCTION

2. TREE RESTORATION WILL BE APPLIED AT TIME OF PHASED TREE REMOVAL BASED ON DEVELOPMENT SCHEDULE.

CALL BEFORE YOU DIG!

Gopher State One Call

TWIN CITY AREA: 651-454-0002
TOLL FREE: 1-800-252-1166

WARNING:

THE CONTRACTOR SHALL BE RESPONSIBLE FOR CALLING FOR LOCATIONS OF ALL EXISTING UTILITIES. THEY SHALL COOPERATE WITH ALL UTILITY COMPANIES IN MAINTAINING THEIR SERVICE AND / OR RELOCATION OF LINES.

THE CONTRACTOR SHALL CONTACT GOPHER STATE ONE CALL AT 651-454-0002 AT LEAST 48 HOURS IN ADVANCE FOR THE LOCATIONS OF ALL UNDERGROUND WIRES, CABLES, CONDUITS, PIPES, MANHOLES, VALVES OR OTHER BURIED STRUCTURES BEFORE DIGGING. THE CONTRACTOR SHALL REPAIR OR REPLACE THE ABOVE WHEN DAMAGED DURING CONSTRUCTION AT NO COST TO THE OWNER.

CROW RIVER HEIGHTS WEST FUTURE ADD.

HANOVER, MN

BACKES COMPANIES
11413 ASHBURY CIRCLE N.
CHAMPLIN, MN 55316
PHONE: (612) 369-7750
FAX (612) 566-1525

LOUCKS
PLANNING
CIVIL ENGINEERING
LAND SURVEYING
LANDSCAPE ARCHITECTURE
ENVIRONMENTAL
7200 Hemlock Lane, Suite 300
Maple Grove, MN 55369
763.424.5505
www.loucksinc.com

CADD QUALIFICATION

CADD files prepared by the Consultant for this project are instruments of the Consultant professional services for use solely with respect to this project. These CADD files shall not be used on other projects, for additions to this project, or for completion of this project by others without written approval by the Consultant. With the Consultant's approval, others may be permitted to obtain copies of the CADD drawing files for information and reference only. All intentional or unintentional revisions, additions, or deletions to these CADD files shall be made at the full risk of that party making such revisions, additions or deletions and that party shall hold harmless and indemnify the Consultant from any & all responsibilities, claims, and liabilities.

SUBMITTAL/REVISIONS

04/20/18 CITY SUBMITTAL

PROFESSIONAL SIGNATURE

I hereby certify that this plan, specification or report was prepared by me or under my direct supervision and that I am a duly Licensed Professional Engineer under the laws of the State of Minnesota.

PRELIMINARY

License No. 20383
Date

QUALITY CONTROL

Loucks Project No.	16101A
Project Lead	TWM
Drawn By	ZHW
Checked By	TWM
Review Date	04/02/18

SHEET INDEX

C0-1 ..... COVER SHEET
C1-1 ..... EXISTING CONDITIONS
C1-2 ..... PRELIMINARY PLAT
C2-0 - C2-2 ..... SITE PLAN
C3-0 - C3-2 ..... GRADING PLAN
C3-3 - C3-5 ..... SWPPP PLAN & NOTES
C4-0 - C4-2 ..... UTILITY PLAN
C8-1 - C8-2 ..... DETAILS
L0-1 - L0-3 ..... TREE PRESERVATION
L0-4 ..... TREE INVENTORY
L1-1 - L1-2 ..... LANDSCAPE PLANS
L2-1 ..... LANDSCAPE DETAILS

NORTH TREE PRESERVATION PLAN

L0-2

Plotted: 04 /18 / 2018 1:15 PM W:\2016\16101A\CADD DATA\LANDSCAPE\ dwg Sheet Files - 4-4 Addition\16101A L0-2 Tree Preservation

CROW RIVER HEIGHTS WEST FUTURE ADD.

HANOVER, MN

BACKES COMPANIES
11413 ASHBURY CIRCLE N.
CHAMPLIN, MN 55316
PHONE: (612) 369-7750
FAX (612) 566-1525

LOUCKS
PLANNING
CIVIL ENGINEERING
LAND SURVEYING
LANDSCAPE ARCHITECTURE
ENVIRONMENTAL
7200 Hemlock Lane, Suite 300
Maple Grove, MN 55369
763.424.5505
www.loucksinc.com

TREE INVENTORY / REPLACEMENT - SOUTH

	TOTAL TREES	TOTAL CAL. IN.
TOTAL SIGNIFICANT TREES ON-SITE	0	0
TREES TO BE SAVED	0	0
TREES TO BE REMOVED	0	0
TOTAL TREES TO BE MITIGATED -	0	
PROPOSED POND SLOPE TREES - 12 TREES / ACRE PROPOSED LOT TREES - 2 TREES PER LOT	7 118	
TOTAL PROPOSED TREES	125	

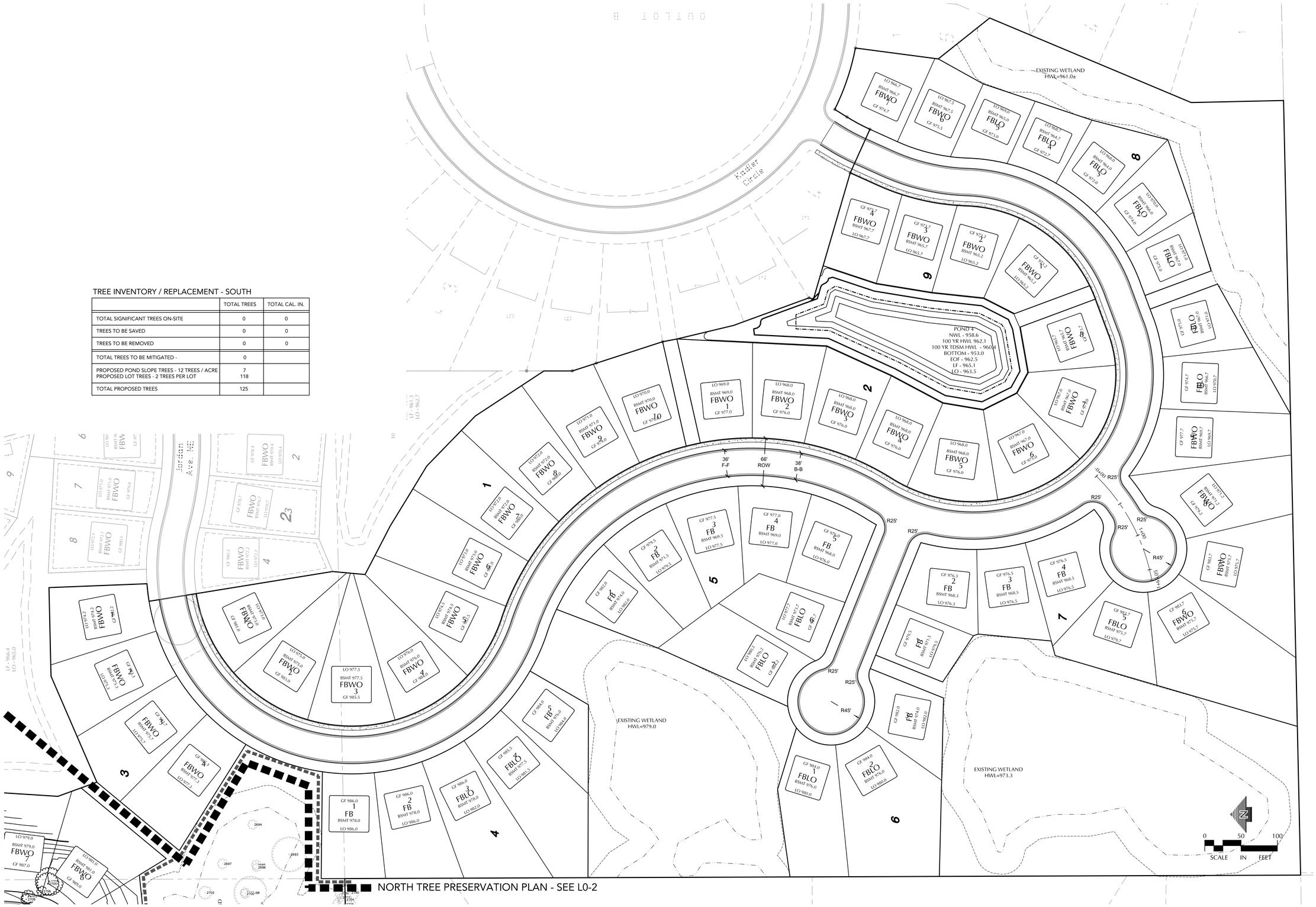

CALL BEFORE YOU DIG!
Gopher State One Call
TWIN CITY AREA: 651-454-0002
TOLL FREE: 1-800-252-1166

WARNING:

THE CONTRACTOR SHALL BE RESPONSIBLE FOR CALLING FOR LOCATIONS OF ALL EXISTING UTILITIES. THEY SHALL COOPERATE WITH ALL UTILITY COMPANIES IN MAINTAINING THEIR SERVICE AND / OR RELOCATION OF LINES.

THE CONTRACTOR SHALL CONTACT GOPHER STATE ONE CALL AT 651-454-0002 AT LEAST 48 HOURS IN ADVANCE FOR THE LOCATIONS OF ALL UNDERGROUND WIRES, CABLES, CONDUITS, PIPES, MANHOLES, VALVES OR OTHER BURIED STRUCTURES BEFORE DIGGING. THE CONTRACTOR SHALL REPAIR OR REPLACE THE ABOVE WHEN DAMAGED DURING CONSTRUCTION AT NO COST TO THE OWNER.

CADD QUALIFICATION

CADD files prepared by the Consultant for this project are instruments of the Consultant professional services for use solely with respect to this project. These CADD files shall not be used on other projects, for additions to this project, or for completion of this project by others without written approval by the Consultant. All data contained on these CADD files shall be considered to be the exclusive property of the CADD drawing files. The information is delivered in lieu of any all intentional or unintentional revisions, additions, or deletions to these CADD files shall be made at the full risk of that party making such revisions, additions or deletions and that party shall hold harmless and indemnify the Consultant from any & all responsibilities, claims, and liabilities.

SUBMITTAL/REVISIONS

04/20/18	CITY SUBMITTAL

PROFESSIONAL SIGNATURE

I hereby certify that this plan, specification, or report was prepared by me or under my direct supervision and that I am a duly Licensed Professional Engineer under the laws of the State of Minnesota.

PRELIMINARY

License No. 20383
Date
Zachary W. McLouth - PE

QUALITY CONTROL

Loucks Project No.	16101A
Project Lead	TWM
Drawn By	ZHW
Checked By	TWM
Review Date	04/02/18

SHEET INDEX

C0-1	COVER SHEET
C1-1	EXISTING CONDITIONS
C1-2	PRELIMINARY PLAT
C2-0 - C2-2	SITE PLAN
C3-0 - C3-2	GRADING PLAN
C3-3 - C3-5	SWPPP PLAN & NOTES
C4-0 - C4-2	UTILITY PLAN
C8-1 - C8-2	DETAILS
L0-1 - L0-3	TREE PRESERVATION
L0-4	TREE INVENTORY
L1-1 - L1-2	LANDSCAPE PLANS
L2-1	LANDSCAPE DETAILS

SOUTH TREE PRESERVATION PLAN

L0-3

Plotted: 04 /18 / 2018 10:56 AM W:\2016\16101A\CADD DATA\LANDSCAPE\.dwg Sheet Files - 4-6 Addition\L16101A L0-2 Tree Preservation

TREE #	SPECIES	CAL. IN.	COND.	STEMS	SPECIMAN	STATUS
2001	Ash, green	14.0	Fair	2		Removed
2002	Elm, American	19.5	Good	1		Removed
2003	Redcedar	6.0	Good	1		Removed
2004	Elm, American	8.5	Good	1		Removed
2005	Maple, silver	24.0	Fair	1		Saved
2006	Maple, silver	19.0	Fair	1		Removed
2007	Elm, American	8.5	Good	1		Removed
2027	Ash, green	14.0	Good	1		Removed
2047	Ironwood	8.5	Fair	1		Removed
2048	Ironwood	6.0	Good	1		Removed
2049	Oak, red	7.0	Good	1		Removed
2051	Elm, American	10.5	Good	1		Removed
2054	Ironwood	13.5	Fair	1		Removed
2055	Basswood	12.0	Good	1		Removed
2056	Basswood	6.0	Good	1		Removed
2057	Basswood	6.0	Good	1		Removed
2058	Ironwood	7.0	Good	2		Removed
2059	Maple, silver	6.0	Good	1		Removed
2060	Ironwood	6.0	Good	1		Removed
2061	Elm, American	9.0	Good	1		Removed
2062	Ironwood	8.0	Good	1		Removed
2063	Ironwood	9.0	Good	1		Removed
2064	Ash, green	18.5	Good	1		Removed
2065	Ash, green	21.0	Good	1		Removed
2067	Maple, sugar	8.5	Good	1		Removed
2068	Ironwood	6.0	Fair	1		Removed
2069	Maple, sugar	7.0	Good	1		Removed
2070	Maple, sugar	6.5	Good	1		Removed
2071	Maple, sugar	9.0	Good	1		Removed
2072	Maple, sugar	9.0	Good	1		Removed
2073	Maple, sugar	8.0	Good	1		Removed
2074	Ash, green	11.5	Good	1		Removed
2075	Hickory, bitternut	8.0	Good	1		Removed
2076	Hickory, bitternut	8.5	Good	1		Removed
2077	Hickory, bitternut	8.5	Good	1		Removed
2078	Hickory, bitternut	12.5	Good	1		Removed
2079	Hickory, bitternut	6.5	Good	1		Removed
2080	Ironwood	7.5	Good	1		Removed
2081	Maple, silver	11.0	Good	1		Removed
2082	Ash, green	8.5	Good	1		Removed
2083	Hickory, bitternut	9.0	Good	1		Removed
2084	Oak, red	25.0	Good	1		Removed
2085	Ash, green	14.0	Good	1		Removed
2086	Ash, green	10.0	Good	1		Removed
2087	Ash, green	18.0	Good	1		Removed
2088	Redcedar	8.0	Good	1		Removed
2089	Redcedar	5.0	Good	1		Removed
2090	Oak, red	8.0	Good	1		Removed
2091	Ash, green	17.0	Good	1		Removed
2092	Redcedar	7.0	Good	1		Removed
2093	Maple, sugar	6.5	Good	1		Removed
2094	Ash, green	12.0	Good	1		Removed
2095	Ash, green	6.5	Good	1		Removed
2096	Ash, green	11.0	Good	1		Removed
2097	Cherry, black	6.0	Good	1		Removed
2098	Ash, green	7.0	Good	1		Removed
2099	Ironwood	12.0	Good	2		Removed
2100	Ash, green	11.5	Fair	1		Removed
2101	Ironwood	12.0	Good	2		Removed
2102	Basswood	13.0	Good	1		Removed
2103	Maple, sugar	18.0	Good	1		Removed
2104	Maple, sugar	26.0	Good	1		Removed
2105	Ash, green	14.0	Good	1		Removed
2106	Maple, sugar	11.0	Good	1		Removed
2107	Ash, green	15.0	Good	1		Removed
2108	Redcedar	4.5	Fair	1		Removed
2109	Maple, sugar	6.5	Good	1		Removed
2110	Hickory, bitternut	12.0	Good	1		Removed
2111	Basswood	12.0	Good	1		Removed
2112	Oak, bur	22.0	Good	1		Removed
2113	Maple, sugar	7.5	Good	1		Removed
2114	Ash, green	7.5	Good	1		Removed
2115	Maple, sugar	10.0	Good	1		Removed
2116	Maple, sugar	6.0	Fair	1		Removed
2117	Redcedar	9.0	Good	1		Removed
2118	Ash, green	15.0	Good	1		Removed
2119	Ash, green	12.5	Good	1		Removed
2120	Ironwood	6.0	Good	1		Removed
2121	Ironwood	6.5	Good	1		Removed
2122	Ironwood	9.0	Good	1		Removed
2123	Ironwood	16.0	Good	1		Removed
2124	Elm, American	6.0	Good	1		Removed
2125	Ash, green	7.0	Good	1		Removed
2126	Ash, green	7.0	Fair	1		Removed
2127	Ironwood	8.0	Fair	1		Removed
2128	Ironwood	7.0	Fair	1		Removed
2129	Ash, green	6.5	Good	1		Removed
2130	Maple, sugar	7.0	Good	1		Removed
2131	Ironwood	9.5	Good	1		Removed
2132	Ash, green	17.5	Good	1		Removed
2133	Maple, sugar	8.5	Good	1		Removed
2134	Ironwood	6.0	Good	1		Removed
2135	Ironwood	9.0	Good	2		Removed
2136	Ash, green	21.5	Good	1		Removed
2137	Ash, green	22.0	Good	1		Removed
2138	Ironwood	6.5	Good	1		Removed
2139	Ash, green	14.5	Good	1		Removed
2140	Ash, green	13.0	Good	1		Removed
2141	Elm, American	8.5	Good	1		Removed
2142	Ash, green	22.0	Good	1		Removed
2143	Ash, green	18.0	Fair	1		Removed
2144	Ironwood	10.5	Good	1		Removed
2145	Ash, green	30.5	Good	1	Yes	Removed
2146	Ironwood	7.0	Good	1		Removed
2147	Ironwood	6.5	Good	1		Removed
2148	Ironwood	8.5	Good	1		Removed
2149	Elm, American	11.0	Good	1		Removed
2150	Elm, American	8.5	Good	1		Removed
2151	Ash, green	15.0	Good	1		Removed
2152	Ash, green	10.0	Good	1		Removed
2153	Elm, American	13.0	Good	1		Removed
2154	Elm, American	7.0	Good	1		Removed
2155	Elm, American	6.0	Good	1		Removed
2156	Ash, green	6.5	Good	1		Removed
2157	Ash, green	6.5	Good	1		Removed
2158	Elm, American	7.0	Good	1		Removed
2159	Cherry, black	8.0	Good	1		Removed
2160	Oak, red	15.5	Good	1		Removed
2161	Redcedar	12.0	Good	1		Removed
2162	Ironwood	6.5	Fair	1		Removed
2163	Boxelder	7.0	Good	1		Removed
2164	Elm, American	9.0	Good	1		Removed
2165	Ironwood	6.0	Good	1		Removed
2166	Ironwood	6.0	Good	1		Removed
2167	Ash, green	15.0	Good	1		Removed
2168	Ash, green	15.0	Good	1		Removed
2169	Ironwood	6.0	Good	1		Removed
2170	Ironwood	6.0	Good	1		Removed

TREE #	SPECIES	CAL. IN.	COND.	STEMS	SPECIMAN	STATUS
2171	Ash, green	8.0	Good	1		Removed
2172	Ash, green	6.5	Fair	1		Removed
2173	Elm, American	8.0	Good	1		Removed
2174	Elm, American	9.5	Good	1		Removed
2175	Maple, sugar	10.5	Good	1		Removed
2176	Ash, green	15.0	Good	1		Removed
2177	Ironwood	8.0	Fair	1		Removed
2178	Ironwood	18.0	Fair	2		Removed
2179	Ironwood	8.5	Good	1		Removed
2180	Ash, green	8.5	Good	1		Removed
2181	Ash, green	6.5	Good	1		Removed
2182	Ash, green	17.5	Good	1		Removed
2183	Ironwood	6.0	Good	1		Removed
2184	Maple, sugar	10.0	Good	1		Removed
2185	Maple, sugar	7.0	Good	1		Removed
2186	Oak, red	10.5	Good	1		Removed
2187	Oak, red	6.0	Good	1		Removed
2188	Maple, sugar	8.0	Good	1		Removed
2189	Elm, American	7.0	Good	1		Removed
2190	Maple, silver	10.5	Good	1		Removed
2191	Maple, silver	13.0	Good	1		Removed
2192	Ironwood	11.0	Fair	1		Removed
2193	Ash, green	6.0	Good	1		Removed
2194	Basswood	9.5	Good	1		Removed
2195	Ironwood	26.0	Fair	3		Removed
2196	Ash, green	13.5	Good	1		Removed
2197	Ash, green	12.0	Good	1		Removed
2198	Ash, green	6.0	Good	1		Removed
2199	Maple, sugar	8.0	Good	1		Removed
2200	Maple, silver	11.5	Good	1		Removed
2201	Maple, sugar	8.0	Good	1		Removed
2202	Maple, silver	10.5	Good	1		Removed
2203	Ironwood	6.0	Good	1		Removed
2204	Ash, green	11.5	Good	1		Removed
2205	Ash, green	14.5	Good	1		Removed
2206	Elm, American	6.5	Good	1		Removed
2207	Ash, green	7.5	Good	1		Removed
2208	Ash, green	6.5	Good	1		Removed
2209	Basswood	7.0	Good	1		Removed
2210	Ash, green	6.5	Good	1		Removed
2211	Ash, green	8.5	Good	1		Removed
2212	Ash, green	12.5	Good	1		Removed
2213	Redcedar	4.0	Fair	1		Removed
2214	Ironwood	12.0	Fair	3		Removed
2215	Ash, green	9.5	Good	1		Removed
2216	Ash, green	12.5	Good	1		Removed
2217	Ash, green	11.0	Good	1		Removed
2218	Ash, green	16.0	Good	2		Removed
2219	Ash, green	11.0	Fair	1		Removed
2220	Ash, green	6.5	Good	1		Removed
2221	Elm, American	7.0	Good	1		Removed
2222	Ash, green	12.5	Good	1		Removed
2223	Ash, green	15.0	Good	1		Removed
2224	Ash, green	10.5	Fair	1		Removed
2225	Maple, sugar	7.0	Good	1		Removed
2226	Maple, sugar	6.5	Good	1		Removed
2227	Ironwood	10.5	Good	1		Removed
2228	Ironwood	6.5	Good	1		Removed
2229	Basswood	14.5	Good	1		Removed
2230	Basswood	29.0	Good	1		Saved
2231	Maple, sugar	8.0	Good	1		Saved
2232	Maple, sugar	6.0	Good	1		Removed
2233	Maple, sugar	23.0	Fair	1		Removed
2234	Ash, green	8.5	Good	1		Removed
2235	Ash, green	7.0	Good	1		Removed
2236	Ash, green	7.5	Good	1		Removed
2237	Ash, green	8.0	Good	1		Removed
2238	Ash, green	8.5	Good	1		Removed
2239	Ash, green	10.5	Good	1		Removed
2240	Ash, green	13.5	Good	1		Removed
2241	Ash, green	9.5	Good	1		Removed
2242	Maple, sugar	6.0	Good	1		Removed
2243	Basswood	12.5	Fair	1		Removed
2244	Ash, green	13.0	Good	1		Removed
2245	Ash, green	22.0	Good	1		Removed
2246	Maple, sugar	8.5	Fair	1		Removed
2247	Ash, green	10.5	Good	1		Removed
2248	Ash, green	8.0	Good	1		Removed
2249	Ash, green	6.0	Good	1		Removed
2250	Maple, silver	9.5	Good	1		Removed
2251	Ash, green	10.0	Good	1		Removed
2252	Ash, green	6.0	Good	1		Removed
2253	Ash, green	11.0	Good	1		Removed
2254	Elm, American	7.0	Good	1		Removed
2255	Maple, sugar	6.5	Good	1		Removed
2256	Elm, American	7.5	Fair	1		Removed
2257	Oak, red	9.0	Good	1		Removed
2258	Elm, American	7.0	Good	1		Removed
2259	Ash, green	7.0	Good	1		Removed
2260	Ash, green	10.0	Good	1		Removed
2261	Ironwood	7.0	Good	1		Removed
2262	Ironwood	6.5	Good	1		Removed
2263	Ironwood	10.0	Good	1		Removed
2264	Ironwood	9.0	Fair	1		Removed
2265	Ash, green	7.0	Good	1		Removed
2266	Ash, green	6.5	Good	1		Removed
2267	Ash, green	28.0	Good	1		Removed
2268	Maple, sugar	21.0	Fair	1		Saved
2269	Maple, sugar	7.0	Good	1		Removed
2270	Maple, sugar	7.5	Good	1		Removed
2271	Maple, sugar	13.0	Good	1		Removed
2272	Maple, sugar	17.0	Good	1		Removed
2273	Maple, sugar	8.5	Good	1		Removed
2274	Maple, sugar	8.0	Fair	1		Removed
2275	Oak, white	29.0	Good	1		Removed
2276	Oak, red	43.0	Good	1	Yes	Removed
2277	Maple, sugar	27.0	Fair	1		Removed
2278	Maple, sugar	26.0	Good	1		Removed
2279	Maple, sugar	26.0	Good	1		Removed
2280	Ironwood	6.5	Good	1		Removed
2281	Elm, American	6.5	Good	1		Removed
2282	Elm, American	6.0	Good	1		Removed
2283	Maple, sugar	6.5	Fair	1		Removed
2284	Ash, green	14.5	Good	1		Removed
2285	Cherry, black	7.0	Fair	1		Removed
2286	Ash, green	17.5	Good	1		Removed
2287	Ash, green	7.0	Good	1		Removed
2288	Ash, green	13.5	Good	1		Removed
2289	Basswood	6.5	Good	1		Removed
2290	Maple, sugar	28.0	Good	1		Removed
2291	Ash, green	14.5	Good	1		Removed
2292	Ash, green	12.0	Good	1		Removed
2293	Basswood	29.5	Fair	1		Removed
2294	Ironwood	7.5	Good	1		Removed
2295	Maple, sugar	19.5	Good	1		Removed
2296	Maple, sugar	19.5	Fair	1		Removed
2297	Maple, sugar	19.5	Good	1		Removed
2298	Oak, bur	21.0	Good	1		Removed

TREE #	SPECIES	CAL. IN.	COND.	STEMS	SPECIMAN	STATUS
2299	Ash, green	13.0	Fair	1		Removed
2300	Oak, white	29.5	Good	1		Removed
2301	Crabapple	7.0	Good	1		Removed
2302	Ironwood	8.0	Good	1		Removed
2303	Ironwood	7.5	Good	1		Removed
2304	Ironwood	6.0	Good	1		Removed
2305	Aspen	7.0	Good	1		Removed
2306	Aspen	8.0	Good	1		Removed
2307	Aspen	7.5	Good	1		Removed
2308	Aspen	7.5	Good	1		Removed
2309	Oak, red	12.5	Good	1		Removed
2310	Ironwood	10.0	Good	2		Removed
2311	Ironwood	9.0	Fair	1		Removed
2312	Ash, green	13.0	Good	1		Removed
2313	Ironwood	7.5	Good	1		Removed
2314	Ash, green	15.5	Good	1		Removed
2315	Ash, green	16.0	Good	1		Removed
2316	Ash, green	11.5	Good	1		Removed
2317	Ironwood	6.0	Good	1		Removed
2318	Ironwood	9.0	Good	1		Removed
2319	Ironwood	9.5	Good	1		Removed
2320	Aspen	9.0	Good	1		Removed
2321	Aspen	8.0	Good	1		Removed
2322	Aspen	6.0	Good	1		Removed
2323	Aspen	10.0	Good	1		Removed
2324	Oak, red	27.0	Good	1		Removed
2325	Ironwood	16.0	Fair	2		Removed
2326	Aspen	7.0	Good	1		Removed
2327	Aspen	11.5	Good	1		Removed
2328	Aspen	6.0	Good	1		Removed
2329	Aspen	12.5	Good	1		Removed
2330	Aspen	11.5	Good	1		Removed
2331	Aspen	9.0	Good	1		Removed
2332	Aspen	10.5	Fair	1		Removed
2333	Ash, green	16.5	Fair	4		Removed
2334	Ash, green	9.0	Good	2		Removed
2335	Aspen	6.0	Good	1		Removed
2336	Ash, green	11.0	Fair	2		Removed
2337	Aspen	6.0	Good	1		Removed
2338	Aspen	7.5	Good	1		Removed
2339	Oak, red	17.5	Good	1		Removed
2340	Ash, green	13.5	Good	1		Removed
2341	Hickory, bitternut	13.0	Good	1		Removed
2342	Elm, Siberian	16.5	Good	1		Removed
2343	Ironwood	18.0	Good	1		Removed
2344	Hickory, bitternut	18.5	Fair	1		Removed
2345	Ironwood	9.0	Good	1		Removed
2346	Ash, green	20.0	Good	1		Removed
2347	Aspen	10.0	Good	1		Removed
2348	Aspen	10.5	Good	1		Removed
2349	Aspen	8.0	Good	1		Removed
2350	Aspen	10.5	Good	1		Removed
2351	Aspen	9.5	Good	1		Removed
2352	Aspen	6.0	Good	1		Removed
2353	Aspen	10.5	Good	1		Removed
2354	Aspen	9.5	Good	1		Removed
2355	Ironwood	9.5	Good	1		Removed
2356	Aspen	6.5	Good	1		Removed
2357	Aspen	6.0	Good	1		Removed
2358	Aspen	9.0	Good	1		Removed
2359	Aspen	6.0	Good	1		Removed
2360	Aspen	7.5	Good	1		Removed
2361	Elm, red	6.5	Good	1		Removed
2362	Elm, red	8.0	Good	1		Removed
2363	Ironwood	9.0	Good	1		Removed
2364	Ironwood	7.0	Good	1		Removed
2365	Elm, American	12.0	Good	1		Removed
2366	Ironwood	12.5	Good	1		Removed
2367	Ash, green	15.5	Good	1		Removed
2368	Elm, Siberian	8.5	Good	1		Removed
2369	Basswood	28.0	Good	1		Removed
2370	Oak, red	30.0	Good	1	Yes	Removed
2371	Elm, Siberian	7.0	Good	1		Removed
2372	Basswood	40.5	Good	1	Yes	Removed
2373	Elm, red	8.0	Good	1		Removed
2374	Maple, sugar	24.5	Good	1		Removed
2375	Ash, green	11.5	Good	1		Removed
2376	Ash, green	6.5	Good	1		Removed
2377	Ash, green	10.5	Good	1		Removed
2378	Ash, green	15.0	Good	1		Removed
2379	Ash, green	20.0	Good	1		Removed
2380	Ash, green	16.0	Good	1		Removed
2381	Ash, green	20.0	Good	1		Removed
2382	Maple, sugar	6.0	Good	1		Removed
2383	Ash, green	6.5	Good	1		Removed
2384	Maple, sugar	10.5	Good	1		Removed
2385	Maple, sugar	9.0	Good	1		Removed
2386	Ash, green	8.5	Good	1		Removed
2387	Hickory, bitternut	9.5	Good	1		Removed
2388	Maple, sugar	6.0	Good	1		Removed
2389	Maple, sugar	6.0	Good	1		Removed
2390	Ash, green	9.0	Good	1		Removed
2391	Hickory, bitternut	8.5	Good	1		Removed
2392	Ironwood	8.0	Good	1		Removed
2393	Ash, green	10.0	Good	1		Removed
2394	Oak, white	27.0	Good	1		Removed
2395	Elm, American	9.5	Good	1		Removed
2396	Maple, sugar	23.5	Good	1		Removed
2397	Maple, sugar	8.0	Fair	1		Removed
2398	Oak, white	19.0	Fair	1		Saved
2399	Oak, white	23.0	Good	1		Removed
2401	Maple, sugar	6.0	Good	1		Removed
2402	Ironwood	6.0	Good	1		Removed
2403	Oak, white	21.5	Good	1		Removed
2404	Maple, sugar	18.0	Good	1		Removed
2405	Maple, sugar	20.5	Good	1		Removed
2406	Maple, sugar	24.0	Good	1		Removed
2407	Ironwood	6.0	Good	1		Removed
2408	Basswood	14.0	Good	1		Removed
2409	Ironwood	6.5	Good	1		Removed
2410	Ironwood	8.0	Good	1		Removed
2411	Oak, red	11.0	Good	1		Removed
2412	Ash, green	17.0	Fair	1		Removed
2413	Maple, sugar	7.0	Good	1		Removed
2414	Elm, American	11.0	Good	1		Removed
2415	Maple, sugar	7.0	Good	1		Removed
2416	Maple, sugar	6.0	Good	1		Removed
2417	Ash, green	8.5	Fair	1		Removed
2418	Basswood	13.0	Good	1		Removed
2419	Oak, red	16.0	Good	1		Removed
2420	Maple, sugar	10.0	Good	1		Removed
2421	Hickory, bitternut	9.0	Fair	1		Removed
2422	Ironwood	10.5	Fair	1		Removed
2423	Ash, green	12.0	Good	1		Removed
2424	Maple, sugar	29.0	Fair	1		Removed
2425	Maple, sugar	13.5	Good	1		Removed
2426	Elm, American	8.0	Good	1		Removed
2427	Maple, sugar	23.0	Good	1		Removed

TREE #	SPECIES	CAL. IN.	COND.	STEMS	SPECIMAN	STATUS
2428	Elm, American	8.5	Good	1		Removed
2429	Maple, sugar	28.0	Good	1		Removed
2430	Elm, American	10.0	Good	1		Removed
2431	Elm, American	12.5	Good	1		Removed
2432	Elm, American	6.0	Fair	1		Removed
2433	Hickory, bitternut	8.5	Good	1		Removed
2434	Ash, green	17.0	Good	1		Removed
2435	Basswood	30.0	Fair	1	Yes	Removed
2436	Ironwood	7.5	Fair	1		Removed
2437	Ash, green	12.5	Good	1		Removed
2438	Ash, green	9.0	Good	1		Removed
2439	Ironwood	15.0	Fair	1		Removed
2440	Maple, sugar	25.5	Fair	1		Removed
2441	Basswood	29.5	Good	1		Removed
2442	Basswood	7.0	Fair	1		Removed
2443	Elm, Siberian	7.0	Good	1		Removed
2444	Hickory, bitternut	10.5	Good	1		Removed
2445	Ash, green	9.5	Good	1		Removed
2446	Hickory, bitternut	7.5	Good	1		Removed
2447	Elm, red	9.5	Good	1		Removed
2448	Hickory, bitternut	9.5	Good	1		Removed
2449	Ash, green	14.0	Good	1		Removed
2450	Hickory, bitternut	6.0	Good	1		Removed
2451	Ash, green	18.0	Good	1		Removed
2452	Elm, American	7.0	Good	1		Removed
2453	Elm, American	8.0	Good	1		Removed
2454	Elm, American	6.5	Good	1		Removed
2455	Hickory, bitternut	7.0	Good	1		Removed
2456	Hickory, bitternut	14.0	Fair	2		Removed
2457	Ash, green	8.0	Fair	1		Removed
2458	Maple, sugar	20.0	Good	1		Removed
2459	Maple, sugar	21.0	Good	1		Removed
2460	Maple, sugar	19.5	Good	1		Removed
2461	Hickory, bitternut	7.0	Good	1		Removed
2462	Maple, sugar	30.0	Fair	1	Yes	Removed
2463	Oak, white	19.5	Good	1		Removed
2464	Oak, red	33.5	Good	1	Yes	Removed
2465	Elm, American	7.0	Good	1		Removed
2466	Ironwood	7.5	Good	1		Removed
2467	Ash, green	10.5	Good	1		Removed
2468	Ironwood	6.5	Good	1		Removed
2469	Ash, green	10.0	Good	1		Removed
2470	Ironwood	7.0	Good	1		Removed
2471	Ironwood	8.5	Good	1		Removed
2472	Oak, red	35.0	Good	1	Yes	Removed
2473	Ash, green	11.0	Good	1		Removed
2474	Oak, red	32.0	Good	1	Yes	Removed
2475	Ironwood	9.5	Fair	1		Removed
2476	Ash, green	8.5	Good	1		Removed
2477	Ash, black	9.5	Good	1		Removed
2478	Ash, black	16.5	Good	1		Removed
2479	Ash, black	8.5	Good	1		Removed
2480	Ash, black	9.5	Good	1		Removed
2481	Ash, black	11.0	Good	1		Removed
2482	Ash, black	9.0	Good	1		Removed
2483	Hickory, bitternut	13.5	Good	1		Removed
2484	Elm, American	6.0	Fair	1		Removed
2485	Ash, green	8.0	Good	1		Removed
2486	Ash, green	12.0	Good	1		Removed
2487	Ash, green	7.0	Good	1		Removed
2488	Ironwood	18.0	Fair	2		Removed
2489	Hickory, bitternut	7.0	Good	1		Removed
2490	Ash, green	16.0	Good	1		Removed
2491	Hickory, bitternut	6.0	Good	1		Removed
2492	Ash, green	21.0	Good	1		Removed
2493	Hickory, bitternut	8.5	Good	1		Removed
2494	Elm, American	11.5	Fair	1		Removed
2495	Elm, American	7.0	Good	1		Removed
2496	Elm, American	6.5	Good	1		Removed
2497	Hickory, bitternut	7.5	Good	1		Removed
2498	Elm, American	6.5	Good	1		Removed
2499	Elm, American	7.0	Good	1		Removed
2500	Basswood	9.0	Good	1		Removed
2501	Elm, American	8.0	Good	1		Removed
2502	Hickory, bitternut	6.0	Good	1		Removed
2503	Oak, red	32.5	Fair	1	Yes	Removed
2504	Maple, sugar	22.5	Good	1		Removed
2505	Maple, sugar	12.0	Fair	1		Removed
2506	Hickory, bitternut	9.0	Good	1		Removed
2507	Ash, green	19.0	Good	1		Removed
2508	Ash, green	16.0	Fair	1		Removed
2509	Ash, green	12.0	Good	1		Removed
2510	Maple, red	10.0	Good	1		Removed
2511	Ironwood	7.0	Good	1		Removed
2512	Ironwood	7.0	Good	1		Removed
2513	Oak, white	34.5	Good	1	Yes	Removed
2514	Elm, American	9.5	Good	1		Removed
2515	Ash, green	11.0	Fair	1		Removed
2516	Maple, sugar	10.5	Good	1		Removed
2517	Hackberry	12.0	Good	1		Removed
2518	Maple, sugar	8.0	Good	1		Removed
2519	Ironwood	7.5	Good	1		Removed
2520	Maple, sugar	10.0	Good	1		Removed
2521	Maple, sugar	22.0	Good	1		Removed
2522	Maple, sugar	15.5	Good	1		Removed
2523	Maple, sugar	15.0	Good	1		Removed
2524	Maple, sugar	11.0	Fair	1		Removed
2525	Basswood	9.5	Good	1		Removed
2526	Maple, sugar	23.0	Good	1		Removed
2527	Basswood	13.5	Good	1		Removed
2528	Maple, sugar	24.0	Fair	1		Removed
2529	Basswood	26.0	Good	1		Removed
2530	Ironwood	8.0	Good	1		Removed
2531	Basswood	22.5	Good	1		Removed
2532	Basswood	15.0	Good	1		Removed
2533	Basswood	9.5	Fair	1		Removed
2534	Elm, American	8.0	Good	1		Removed
2535	Maple, sugar	19.0	Good	1		Removed
2536	Oak, red	26.0	Good	1		Removed
2537	Maple, sugar	15.5	Good	1		Removed
2538	Elm, American	9.5	Good	1		Removed
2539	Hickory, bitternut	8.0	Good	1		Removed
2540	Hickory, bitternut	6.5	Good	1		Removed
2541	Basswood	36.0	Fair	2		Removed
2542	Elm, red	7.5	Good	1		Removed
2543	Hickory, bitternut	6.5	Good	1		Removed
2544	Maple, sugar	9.0	Good	1		Removed
2545	Hickory, bitternut	6.5	Good	1		Removed
2546	Ash, green	14.5	Fair	1		Removed
2547	Hickory, bitternut	8.5	Good	1		Removed
2548	Redcedar	4.5	Good	1		Removed
2549	Basswood	27.0	Good	1		Removed
2550	Ash, green	7.0	Good	1		Removed
2551	Ash, green	16.5	Good	1		Removed
2552	Basswood	7.5	Good	1		Removed
2553	Basswood	6.5	Good	1		Removed
2554	Ash, green	10.0	Good	1		Removed
2555	Oak, bur	24.0	Good	1		Removed

TREE #	SPECIES	CAL. IN.	COND.	STEMS	SPECIMAN	STATUS
2556	Redcedar	8.5	Good	1		Removed
2557	Ash, green	6.0	Good	1		Removed
2558	Maple, silver	28.0	Fair	1		Removed
2559	Elm, American	12.5	Good	1		Removed
2560	Ash, green	6.5	Good	1		Removed
2561	Maple, sugar	8.0	Good	1		Removed
2562	Hickory, bitternut	11.0	Good	1		Removed
2563	Ash, green	14.5	Good	1		Removed
2564	Elm, American	6.5	Good	1		Removed
2565	Ash, green	26.0	Fair	1		Removed
2566	Elm, American	7.5	Fair	1		Removed
2567	Ash, green	26.5	Good	1		Removed
2568	Maple, silver	27.0	Fair	1		Removed
2569	Ash, green	21.0	Good	1		Removed
2570	Elm, American	8.0	Good	1		Removed
2571	Maple, silver	17.6	Good	1		Removed
2572	Maple, silver	27.0	Fair	1		Removed
2573	Elm, American	7.0	Good	1		Removed
2574	Ash, green	9.5	Good	1		Removed
2575	Hickory, bitternut	9.5	Good	1		Removed
2576	Hackberry	8.5	Good	1		Saved
2577	Ash, green	7.5	Good	1		Removed
2578	Elm, American	10.0	Good	1		Saved
2579	Hickory, bitternut	7.0	Good	1		Saved
2580	Oak, red	9.5	Good	1		Saved
2581	Oak, white	31.0	Good	1	Yes	Saved
2582	Oak, bur	26.5	Good	1		Saved
2583	Ash, green	8.0	Good	1		Removed
2587	Ash, black	6.5	Good	1		Removed
2589	Ash, green	8.5	Good	1		Saved
2590	Ash, green	14.5	Good	1		Saved
2591	Maple, silver	20.0	Fair	1		Saved
2592	Ash, green	8.0	Fair	1		Saved
2593	Ash, green	7.0	Good	1		Removed
2595	Elm, American	7.0	Good	1		Removed
2597	Ash, green	20.0	Good	1		Saved
2598	Ironwood	7.5	Good	1		Removed
2599	Maple, sugar	8.0	Good	1		Removed
2600	Hickory, bitternut	8.5	Good	1		Removed
2601	Maple, sugar	6.5	Fair	1		Removed
2602	Hickory, bitternut	6.5	Good	1		Removed
2603	Elm, American	7.5	Good	1		Removed
2604	Ironwood	9.5	Fair	1		Removed
2605	Hickory, bitternut	8.0	Good	1		Saved
2606	Maple, sugar	28.5	Good	1		Removed
2607	Elm, American	7.0	Fair	1		Removed
2608	Ash, green	7.5	Good	1		Removed
2609	Ash, green	8.0	Good	1		Removed
2610	Ash, green	6.5	Good	1		Removed
2611	Maple, sugar	6.0	Good	1		Removed
2612	Basswood	14.5	Fair	2		Removed
2613	Ash, green	13.5	Good	1		Removed
2614	Ironwood	6.5	Good	1		Removed
2615	Ironwood	6.5	Good	1		Removed
2616	Oak, red	17.5	Good	1		Removed
2617	Basswood	12.0	Good	1		Saved
2618	Basswood	10.0	Good	1		Saved
2619	Ash, green	7.0	Good	1		Removed
2620	Hickory, bitternut	6.5	Good	1		Removed
2621	Ash, green	6.0	Good	1		Removed
2622	Ash, green	6.5	Good	1		Removed
2623	Ash, green	6.0	Good	1		Removed
2624	Maple, sugar	13.5	Good	1		Removed
2625	Ironwood	6.0	Good	1		Saved
2626	Ironwood	7.0	Good	1		Removed
2627	Ash, green	7.0	Good	1		Removed
2628	Hickory, bitternut	11.5	Good	1		Removed
2629	Oak, white	35.0	Good	1	Yes	Removed
2630	Basswood	23.5	Fair	1		Removed
2631	Oak, white	22.0	Good	1		Removed
2632	Ash, green	23.0	Fair	1		Removed
2633	Elm, American	7.5	Good	1		Removed
2634	Elm, American	7.5	Good	1		Removed
2635	Maple, sugar	30.0	Fair	1	Yes	Removed
2636	Elm, American	7.0	Good	1		Removed
2637	Elm, American	13.5	Good	1		Removed
2638	Elm, American	7.5	Good	1		Removed
2639	Elm, American	7.0	Good	1		Removed
2640	Ash, green	16.5	Good	1		Removed
2641	Ash, green	9.5	Good	1		Removed
2642	Maple, sugar	32.5	Good	1	Yes	Removed
2643	Oak, red	28.0	Fair	1		Removed
2644	Ash, green	11.5	Good	1		Removed
2645	Elm, American	9.0	Good	1		Removed
2646	Maple, sugar	10.5	Fair	1		Removed
2647	Elm, American	6.5	Good	1		Removed
2648	Ash, green	13.0	Good	1		Removed
2649	Elm, American	12.0	Good	1		Removed
2650	Maple, silver	27.0	Fair	1		Saved
2651	Maple, silver	30.0	Good	1	Yes	Saved
2652	Maple, silver	34.0	Fair	1	Yes	Saved
2653	Ash, green	7.5	Good	1		Saved
2654	Ash, green	8.5	Good	1		Saved
2655	Ash, green	6.5	Good	1		Saved
2656	Ash, green	7.5	Fair	1		Saved
2657	Ash, green	10.5	Good	1		Saved
2658	Ash, green	6.5	Fair	1		Saved
2659	Ash, green	12.5	Good	1		Saved
2660	Ash, green	10.5	Good	1		Saved
2661	Elm, American	11.5	Good	1		Saved
2662	Ash, green	29.0	Good	1		Saved
2663	Redcedar	10.0	Good	2		Saved
2664	Ash, green	29.0	Good	1		Saved
2665	Maple, red	22.0	Good	1		Saved
2666	Maple, sugar	18.0	Good	1		Saved
2667	Maple, sugar	18.0	Good	1		Saved
2668	Maple, sugar	21.0	Fair	1		Saved
2669	Ash, green	8.0	Good	1		Removed
2670	Elm, American	6.0	Good	1		Removed
2671	Basswood	29.0	Fair	1		Removed
2672	Redcedar	6.5	Fair	1		Saved
2673	Redcedar	8.0	Good	1		Removed
2674	Maple, sugar	29.5	Fair	1		Removed
2675	Oak, red	31.0	Good	1	Yes	Removed
2676	Ash, green	6.5	Good	1		Removed
2677	Hickory, bitternut	6.0	Good	1		Removed
2678	Ash, green	6.0	Good	1		Removed
2679	Ash, green	6.5	Good	1		Removed
2680	Basswood	7.5	Good	1		Removed
2681	Maple, sugar	7.5	Good	1		Removed
2682	Maple, red	11.0	Good	1		Removed
2683	Oak, red	28.0	Good	1		Removed
2684	Hickory, bitternut	7.5	Good	1		Removed
2685	Elm, American	6.5	Good	1		Removed
2686	Ash, green	7.5	Good	1		Removed
2687	Elm, American	7.0	Good	1		Removed
2688	Hickory, bitternut	8.5	Good	1		Removed
2689	Oak, red	6.5	Good	1		Removed

TREE #	SPECIES	CAL. IN.	COND.	STEMS	SPECIMAN	STATUS
2690	Oak, white	25.0	Good	1		Saved
2691	Ash, green	8.5	Good	1		Removed
2692	Basswood	62.0	Fair	5		Saved
2693	Ash, green	33.0	Good	1	Yes	Saved
2694	Ash, green	7.0	Good	1		Removed
2695	Elm, American	7.0	Good	1		Saved
2696	Ash, green	6.0	Good	1		Saved
2697	Ash, green	7.5	Good	1		Saved
2698	Maple, silver	31.0	Fair	1	Yes	Saved
2699	Ash, green	6.5	Fair	1		Saved
2700	Ash, green	7.0	Good	1		Saved
2701	Elm, American	10.0	Good	1		Saved
2702	Ash, green	10.5	Good	1		Saved
2703	Ash, green	6.0	Fair	1		Removed
2704	Ash, green	26.0	Fair	5		Removed
2705	Ash, green	20.0	Fair	4		Removed
2706	Elm, American	7.5	Good	1		Removed
2707	Ash, green	11.0	Fair	2		Removed
2708	Ash, green	8.0	Fair	1		Removed
2709	Ash, green	24.0	Fair	5		Removed
2710	Ash, green	19.0	Fair	3		Removed
2711	Ash, green	9.0	Fair	2		Removed
2712	Ash, green	6.0	Good	1		Removed
2713	Elm, American	14.0	Fair	1		Removed
2714	Willow	10.5	Good	1		Removed
2715	Maple, red	12.0	Fair	1		Removed
2716	Elm, American	11.0	Good	1		Removed
2717	Ash, green	21.0	Good	1		Removed
2718	Elm, American	12.5	Good	1		Removed
2719	Ironwood	10.0	Good	1		Removed
2720	Ash, green	17.0	Good	1		Removed
2721	Ash, green	15.0	Good	1		Removed
2722	Ash, green	16.0	Good	1		Removed
2723	Ironwood	13.5	Good	1		Removed
2724	Ash, green	19.5	Good	1		Removed
2725	Ash, green	21.5	Good	1		Removed
2726	Ash, green	10.5	Good	1		Removed
2727	Ash, green	8.5	Fair	1		Removed
2728	Ash, black	17.5	Fair	1		Removed
2729	Ironwood	6.5	Good	1		Removed
2730	Hickory, bitternut	8.0	Good	1		Removed
2731	Ironwood	9.0	Good	1		Removed
2732	Ironwood	11.0	Fair	1		Removed
2733	Ash, green	6.0	Good	1		Removed
2734	Ash, green	10.5	Good	1		Removed
2735	Ironwood	10.0	Good	1		Removed
2736	Ash, green	19.0	Good	1		Removed
2737	Basswood	12.0	Good	2		Removed
2738	Ironwood	6.0	Good	1		Removed
2739	Ironwood	9.0	Good	2		Removed
2740	Ironwood	12.0	Good	1		Removed
2741	Basswood	14.0	Good	1		Removed
2742	Ash, green	15.0	Good	1		Removed
2743	Ironwood	11.0	Good	1		Removed
2744	Ash, green	18.5	Good	1		Removed
2745	Ash, green	20.0	Good	1		Removed
2746	Elm, red	8.5	Good	1		Removed
2747	Ironwood	12.5	Good	1		Removed
2748	Ash, green	14.0	Good	1		Removed
2749	Elm, red	6.5	Good	1		Removed
2750	Ironwood	6.5	Good	1		Removed
2751	Maple, sugar	15.0	Fair	1		Removed
2752	Ash, green	12.0	Good	1		Removed
2753	Elm, American	7.5	Good	1		Removed
2754	Oak, red	40.0	Fair	1	Yes	Removed
2755	Ash, green	25.0	Good	1		Removed
2756	Ironwood	11.5	Good	1		Removed
2757	Maple, sugar	16.0	Good	1		Removed
2758	Ash, green	21.0	Good	1		Removed
2759	Ironwood	9.0	Good	1		Removed
2760	Ash, green	15.5	Good	1		Removed
2761	Elm, American	7.0	Good	1		Removed
2762	Ironwood	9.0	Good	1		Removed
2763	Ironwood	9.0	Good	1		Removed
2764	Maple, sugar	26.0	Good	1		Removed
2765	Ash, green	9.0	Good	1		Saved
2766	Elm, American	16.0	Good	1		Saved
2767	Oak, white	24.0	Good	1		Saved
2768	Elm, American	8.0	Good	1		Saved
2769	Elm, American	11.0	Good	1		Saved
2770	Ash, green	6.0	Fair	1		Saved
2771	Ash, green	7.0	Good	1		Saved
2772	Ash, green	6.0	Good	1		Saved
2773	Elm, American	8.5	Good	1		Saved
2774	Ash, green	7.0	Good	1		Saved
2775	Ash, green	6.5	Good	1		Saved
2776	Ash, green	6.0	Good	1		Saved
2777	Ash, green	9.0	Good	1		Saved
2778	Ash, green	6.5	Good	1		Saved
2779	Ash, green	8.5	Good	1		Saved
2780	Ash, green	8.0	Good	1		Saved
2781	Ash, green	7.5	Good	1		Saved
2782	Ash, green	6.5	Good	1		Saved
2783	Ash, green	9.0	Good	1		Saved
2784	Ash, green	11.0	Good	1		Saved
2785	Ash, green	6.5	Good	1		Saved
2786	Ash, green	6.0	Good	1		Saved
2787	Ash, green	6.5	Good	1		Saved
2788	Elm, American	7.5	Good	1		Saved
2789	Cherry, black	6.5	Fair	1		Saved
2791	Oak, bur	8.5	Fair	1		Saved
2792	Oak, red	6.0	Fair	1		Saved
2793	Basswood	6.5	Good	1		Saved
2794	Basswood	11.5	Good	1		Saved
2795	Oak, red	12.0	Good	1		Saved
2796	Oak, red	23.5	Good	1		Removed
2799	Oak, red	10.0	Fair	1		Saved
2800	Basswood	9.0	Good	1		Saved
2801	Ash, green	8.0	Good	1		Removed
2804	Basswood	16.0	Good	1		Saved
2805	Basswood	13.5	Good	1		Saved
2806	Elm, American	16.5	Good	1		Saved
2807	Ash, green	7.5	Good	1		Saved
2808	Ash, green	8.5	Good	1		Saved
2809	Oak, bur	6.5	Good	1		Saved
2810	Oak, bur	7.5	Good	1		Removed
2814	Ash, green	10.0	Good	1		Saved
2815	Elm, American	6.5	Fair	1		Saved
2816	Oak, bur	8.5	Good	1		Saved

CROW RIVER HEIGHTS WEST FUTURE ADD.

HANOVER, MN

BACKES COMPANIES
11413 ASHBURY CIRCLE N.
CHAMPLIN, MN 55316
PHONE: (612) 369-7750
FAX (612) 566-1525

LOUCKS
PLANNING
CIVIL ENGINEERING
LAND SURVEYING
LANDSCAPE ARCHITECTURE
ENVIRONMENTAL
7200 Hemlock Lane, Suite 300
Maple Grove, MN 55369
763.424.5505
www.loucksinc.com

CADD QUALIFICATION
CADD files prepared by the Consultant for this project are instruments of the Consultant professional services for use solely with respect to this project. These CADD files shall not be used on other projects, for additions to this project, or for completion of this project by others without written approval by the Consultant. With the Consultant's approval, others may be permitted to obtain copies of the CADD drawing files for information and reference only. All intentional or unintentional revisions, additions, or deletions to these CADD files shall be made at the full risk of that party making such revisions, additions or deletions and that party shall hold harmless and indemnify the Consultant from any & all responsibilities, claims, and liabilities.

SUBMITTAL/REVISIONS

04/20/18 CITY SUBMITTAL

PROFESSIONAL SIGNATURE

I hereby certify that this plan, specification or report was prepared by me or under my direct supervision and that I am a duly Licensed Professional Engineer under the laws of the State of Minnesota.

PRELIMINARY

License No. ... T. McLouth - PE 20383
Date

QUALITY CONTROL

Loucks Project No.	16101A
Project Lead	TWM
Drawn By	ZHW
Checked By	TWM
Review Date	04/02/18

SHEET INDEX

C0-1 COVER SHEET
C1-1 EXISTING CONDITIONS
C1-2 PRELIMINARY PLAT
C2-0 - C2-2 SITE PLAN
C3-0 - C3-2 GRADING PLAN
C3-3 - C3-5 SWPPP PLAN & NOTES
C4-0 - C4-2 UTILITY PLAN
C8-1 - C8-2 DETAILS
L0-1 - L0-3 TREE PRESERVATION
L0-4 TREE INVENTORY
L1-1 - L1-2 LANDSCAPE PLANS
L2-1 LANDSCAPE DETAILS

TREE INVENTORY

L0-4

Plotted: 04 /18 / 2018 10:36 AM W:\2016\16101A\CADD DATA\LANDSCAPE_dwg Sheet Files - 4-6 Addition\L16101A L0-4 Tree Inventory

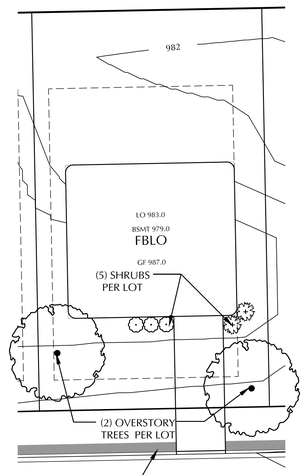

TYPICAL LOT LANDSCAPE PLAN

LANDSCAPE LEGEND

- SIDE SLOPE TREES
- NATIVE SEED MIX - MNDOT MIX 33-261
- 36" SOD STRIP ALONG NEW CURBS OVER 4" DEPTH TOPSOIL

LANDSCAPE NOTES

1. POND SLOPE TREES WILL BE PLANTED AT TIME OF GRADING AND ROAD CONSTRUCTION. LOT TREES AND SHRUBS WILL BE PLANTED AT TIME OF BUILDING CONSTRUCTION

2. TREE RESTORATION WILL BE APPLIED AT TIME OF PHASED TREE REMOVAL BASED ON DEVELOPMENT SCHEDULE.

PLANTING REQUIREMENTS - NORTH		TOTAL REQ'D	TOTAL PROPOSED
POND SLOPE TREES - 12 TREES PER 1 ACRE	2.21 ACRE	27	27
LOT TREES - 2 PER LOT	100 LOTS	200	200
LOT SHRUBS - 5 PER LOT	100 LOTS	500	500

CALL BEFORE YOU DIG!
Gopher State One Call
TWIN CITY AREA: 651-454-0002
TOLL FREE: 1-800-252-1166

WARNING:

THE CONTRACTOR SHALL BE RESPONSIBLE FOR CALLING FOR LOCATIONS OF ALL EXISTING UTILITIES. THEY SHALL COOPERATE WITH ALL UTILITY COMPANIES IN MAINTAINING THEIR SERVICE AND / OR RELOCATION OF LINES.

THE CONTRACTOR SHALL CONTACT GOPHER STATE ONE CALL AT 651-454-0002 AT LEAST 48 HOURS IN ADVANCE FOR THE LOCATIONS OF ALL UNDERGROUND WIRES, CABLES, CONDUITS, PIPES, MANHOLES, VALVES OR OTHER BURIED STRUCTURES BEFORE DIGGING. THE CONTRACTOR SHALL REPAIR OR REPLACE THE ABOVE WHEN DAMAGED DURING CONSTRUCTION AT NO COST TO THE OWNER.

CROW RIVER HEIGHTS WEST FUTURE ADD.

HANOVER, MN

BACKES COMPANIES
11413 ASHBURY CIRCLE N.
CHAMPLIN, MN 55316
PHONE: (612) 369-7750
FAX (612) 566-1525

LOUCKS
PLANNING
CIVIL ENGINEERING
LAND SURVEYING
LANDSCAPE ARCHITECTURE
ENVIRONMENTAL
7200 Hemlock Lane, Suite 300
Maple Grove, MN 55369
763.424.5505
www.loucksinc.com

CADD QUALIFICATION

CADD files prepared by the Consultant for this project are instruments of the Consultant professional services for use solely with respect to this project. These CADD files shall not be used on other projects, for additions to this project, or for completion of this project by others without written approval by the Consultant. With the Consultant's approval, others may be permitted to obtain copies of the CADD drawing files for information and reference only. All intentional or unintentional revisions, additions, or deletions to these CADD files shall be made at the full risk of that party making such revisions, additions or deletions and that party shall hold harmless and indemnify the Consultant from any & all responsibilities, claims, and liabilities.

SUBMITTAL/REVISIONS

04/20/18	CITY SUBMITTAL

PROFESSIONAL SIGNATURE

I hereby certify that this plan, specification, or report was prepared by me or under my direct supervision and that I am a duly Licensed Professional Engineer under the laws of the State of Minnesota.

PRELIMINARY

License Name	Tim McLouth - PE
Date	
License	20383

QUALITY CONTROL

Loucks Project No.	16101A
Project Lead	TWM
Drawn By	ZHW
Checked By	TWM
Review Date	04/02/18

SHEET INDEX

C0-1 ..... COVER SHEET
C1-1 ..... EXISTING CONDITIONS
C1-2 ..... PRELIMINARY PLAT
C2-0 - C2-2 ..... SITE PLAN
C3-0 - C3-2 ..... GRADING PLAN
C3-3 - C3-5 ..... SWPPP PLAN & NOTES
C4-0 - C4-2 ..... UTILITY PLAN
C8-1 - C8-2 ..... DETAILS
L0-1 - L0-3 ..... TREE PRESERVATION
L0-4 ..... TREE INVENTORY
L1-1 - L1-2 ..... LANDSCAPE PLANS
L2-1 ..... LANDSCAPE DETAILS

NORTH LANDSCAPE PLAN

L1-1

Plotted: 04 /18 / 2018 10:13 AM W:\2016\16101A\CADD DATA\LANDSCAPE\ .dwg Sheet Files - 4-6 Addition\L16101A L1-1 Landscape Plan

TYPICAL LOT LANDSCAPE PLAN

LANDSCAPE LEGEND

- SIDE SLOPE TREES
- NATIVE SEED MIX - MNDOT MIX 33-261
- 36" SOD STRIP ALONG NEW CURBS OVER 4" DEPTH TOPSOIL

LANDSCAPE NOTES

1. POND SLOPE TREES WILL BE PLANTED AT TIME OF GRADING AND ROAD CONSTRUCTION. LOT TREES AND SHRUBS WILL BE PLANTED AT TIME OF BUILDING CONSTRUCTION

2. TREE RESTORATION WILL BE APPLIED AT TIME OF PHASED TREE REMOVAL BASED ON DEVELOPMENT SCHEDULE.

PLANTING REQUIREMENTS - SOUTH		TOTAL REQ'D	TOTAL PROPOSED
POND SLOPE TREES - 12 TREES PER 1 ACRE	0.53 ACRE	7	7
LOT TREES - 2 PER LOT	59 LOTS	118	118
LOT SHRUBS - 5 PER LOT	59 LOTS	295	295

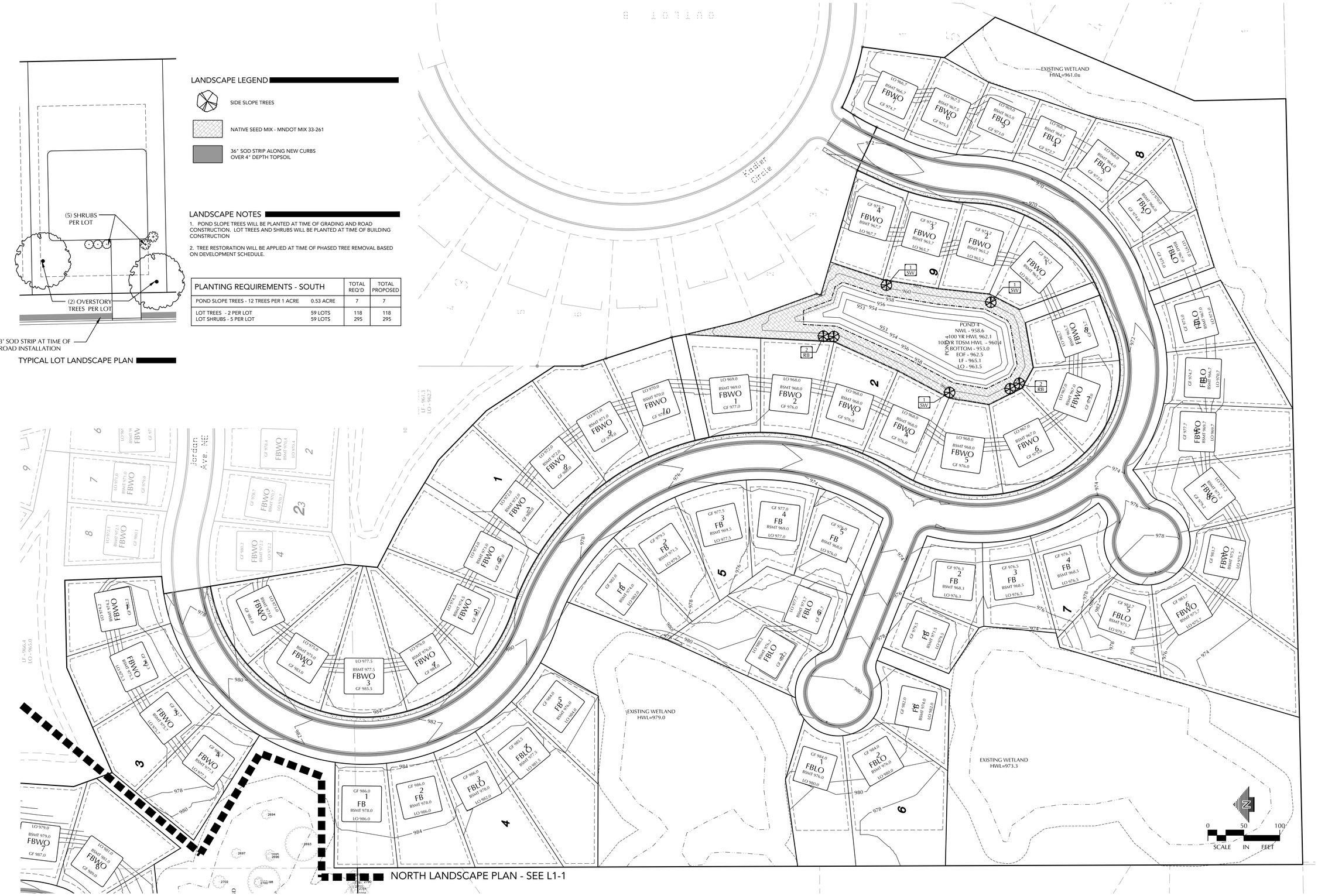

CROW RIVER HEIGHTS WEST FUTURE ADD.

HANOVER, MN

BACKES COMPANIES
11413 ASHBURY CIRCLE N.
CHAMPLIN, MN 55316
PHONE: (612) 369-7750
FAX (612) 566-1525

LOUCKS
PLANNING
CIVIL ENGINEERING
LAND SURVEYING
LANDSCAPE ARCHITECTURE
ENVIRONMENTAL
7200 Hemlock Lane, Suite 300
Maple Grove, MN 55369
763.424.5505
www.loucksinc.com

CADD QUALIFICATION

CADD files prepared by the Consultant for this project are instruments of the Consultant professional services for use solely with respect to this project. These CADD files shall not be used on other projects, for additions to this project, or for completion of this project by others without written approval by the Consultant. Under no circumstances shall transfer of these files be considered to be delivery of the CADD drawing files for information or reliance purposes. All intentional or unintentional revisions, additions, or deletions to these CADD files shall be made at the full risk of that party making such revisions, additions or deletions and that party shall hold harmless and indemnify the Consultant from any & all responsibilities, claims, and liabilities.

SUBMITTAL/REVISIONS

04/20/18 CITY SUBMITTAL

PROFESSIONAL SIGNATURE

I hereby certify that this plan, specification, or report was prepared by me or under my direct supervision and that I am a duly Licensed Professional Engineer under the laws of the State of Minnesota.

PRELIMINARY

License Number 20383
Date

QUALITY CONTROL

Loucks Project No.	16101A
Project Lead	TWM
Drawn By	ZHW
Checked By	TWM
Review Date	04/02/18

SHEET INDEX

C0-1	COVER SHEET
C1-1	EXISTING CONDITIONS
C1-2	PRELIMINARY PLAT
C2-0 - C2-2	SITE PLAN
C3-0 - C3-2	GRADING PLAN
C3-3 - C3-5	SWPPP PLAN & NOTES
C4-0 - C4-2	UTILITY PLAN
C8-1 - C8-2	DETAILS
L0-1 - L0-3	TREE PRESERVATION
L0-4	TREE INVENTORY
L1-1 - L1-2	LANDSCAPE PLANS
L2-1	LANDSCAPE DETAILS

CALL BEFORE YOU DIG!
Gopher State One Call
TWIN CITY AREA: 651-454-0002
TOLL FREE: 1-800-252-1166

WARNING:

THE CONTRACTOR SHALL BE RESPONSIBLE FOR CALLING FOR LOCATIONS OF ALL EXISTING UTILITIES. THEY SHALL COOPERATE WITH ALL UTILITY COMPANIES IN MAINTAINING THEIR SERVICE AND / OR RELOCATION OF LINES.

THE CONTRACTOR SHALL CONTACT GOPHER STATE ONE CALL AT 651-454-0002 AT LEAST 48 HOURS IN ADVANCE FOR THE LOCATIONS OF ALL UNDERGROUND WIRES, CABLES, CONDUITS, PIPES, MANHOLES, VALVES OR OTHER BURIED STRUCTURES BEFORE DIGGING. THE CONTRACTOR SHALL REPAIR OR REPLACE THE ABOVE WHEN DAMAGED DURING CONSTRUCTION AT NO COST TO THE OWNER.

SOUTH LANDSCAPE PLAN

L1-2

Plotted: 04 /18 / 2018 10:11 AM W:\2016\16101A\CADD DATA\LANDSCAPE_dwg Sheet Files - 4-A Addition\L16101A L1-1 Landscape Plan

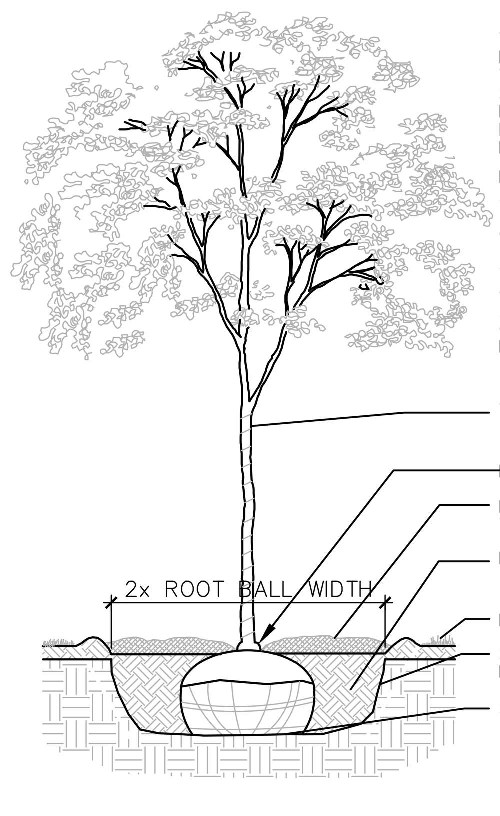

1 / L2-1 DECIDUOUS TREE PLANTING DETAIL

SCALE: 1/2" = 1'-0"

Deciduous Tree.DWG

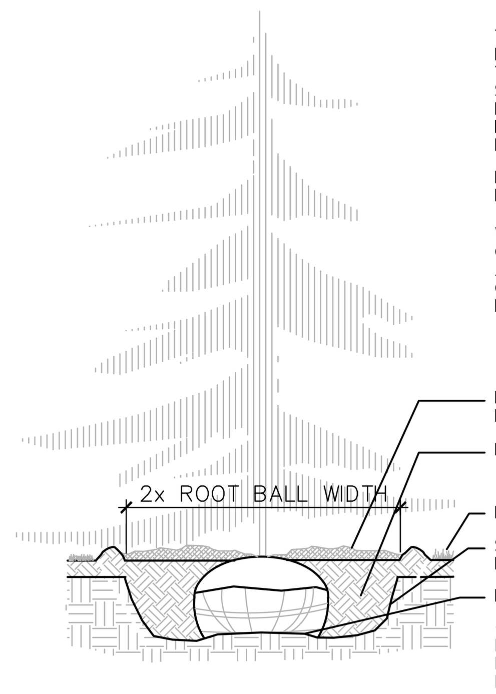

2 / L2-1 CONIFEROUS TREE PLANTING DETAIL

SCALE: 1/2" = 1'-0"

Coniferous Tree.DWG

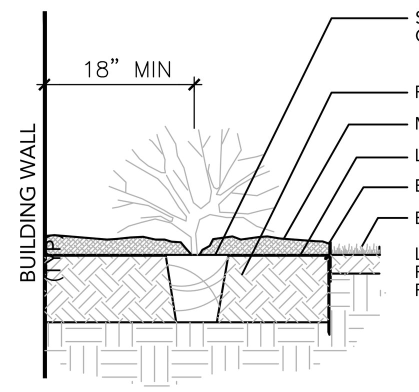

3 / L2-1 SHRUB PLANTING DETAIL

SCALE: 3/4" = 1'-0"

PLANT LIST

KEY	QTY	COMMON NAME	SCIENTIFIC NAME	SIZE	COMMENTS
		SIDE SLOPE TREES - 29 TOTAL			
RB	20	RIVER BIRCH	Betula nigra	2-1/2" CAL B.B.	H 40-50' W 30-40'
SW	14	SWAMP WHITE OAK	Quercus bicolor	2-1/2" CAL B.B.	H 50-60' W 40-50'

LOT PLANT MATERIAL NOTES:

IN ORDER TO ENCOURAGE SPECIES VARIETY AND TO PERMIT HOMEOWNERS TO SELECT THEIR OWN LANDSCAPING, THE CITY WILL NOT REQUIRE THE HOMEOWNERS TO SELECT PLANTS FROM A SPECIFIC PLANT LIST. THE FOLLOWING LIST IS A SUGGESTION OF THE TYPES OF PLANT MATERIAL THAT MAY BE SELECTED BY THE HOMEOWNER.

THE CITY REQUIRES THAT EACH LOT HAVE TWO TREES AND FIVE SHRUBS IN THE FRONT YARD AND THAT THE ENTIRE LOT BE SODDED.

		LOT TREES			
		IMPERIAL HONEYLOCUST	Gleditsia triacanthos inermis 'Impcole'	2-1/2" CAL B.B.	H 30-35' W 30-35'
		RED SUNSET MAPLE	Malus 'Prairie Rose'	2-1/2" CAL B.B.	H 45' W 35'
		NORTHERN PIN OAK	Quercus ellipsoidalis	2-1/2" CAL B.B.	H 40-50' W 30-35'
		GREENSPIRE LINDEN	Tilia cordata 'Greenspire'	2-1/2" CAL B.B.	H 40-50' W 30-35'
		AUSTRIAN PINE	Pinus nigra	8' B.B.	H 50-60' W 30-35'
		COLORADO BLUE SPRUCE	Picea pungens	8' B.B.	H 40-60' W 15-30'
		BLACK HILLS SPRUCE	Picea glauca densata	8' B.B.	H 30-40' W 20-30'
		CONIFEROUS SHRUBS			
		SEA GREEN JUNIPER	Juniperus chinensis 'Sea Green'	#5 CONT	H 4-6' W 3-5'
		SCANDIA JUNIPER	Juniperus sabina 'Scandia'	#5 CONT	H 18" W 3-5'
		TAUNTON YEW	Taunton x media 'Taunton'	#5 CONT	H 3' W 3-4'
		PRINCE OF WALES JUNIPER	Juniperus horizontalis 'Prince of Wales'	#5 CONT	H 6" W 5-6'
		DECIDUOUS SHRUBS			
		NEON FLASH SPIREA	Spirea japonica 'Neon Flash'	#5 CONT	H 3' W 3-5'
		TOR SPIREA	Spirea betulifolia 'Tor'	#5 CONT	H 3' W 3'
		LITTLE PRINCESS SPIREA	Spirea japonica 'Little Princess'	#5 CONT	H 2-3' W 3'
		DWARF EUROPEAN VIBURNUM	Viburnum opulus 'Nanum'	#5 CONT	H 24" W 2-3'
		AUTUMN MAGIC CHOKEBERRY	Aronia melanocarpa 'Autumn Magic'	#5 CONT	H 5-7' W 2-4'
		RED GNOME DOGWOOD	Cornus alba siberica 'Red Gnome'	#5 CONT	H 3-4' W 4-5'
		DWARF BUSH HONEYSUCKLE	Diervilla lonicera	#5 CONT	H 3-4' W 3'
		ALPINE CURRANT	Ribes alphinum	#5 CONT	H 3-5' W 5-6'

GENERAL NOTES

CONTRACTOR SHALL VISIT SITE PRIOR TO SUBMITTING BID. HE SHALL INSPECT SITE AND BECOME FAMILIAR WITH EXISTING CONDITIONS RELATING TO THE NATURE AND SCOPE OF WORK.

VERIFY LAYOUT AND ANY DIMENSIONS SHOWN AND BRING TO THE ATTENTION OF THE LANDSCAPE ARCHITECT ANY DISCREPANCIES WHICH MAY COMPROMISE THE DESIGN AND/OR INTENT OF THE PROJECT'S LAYOUT.

ASSURE COMPLIANCE WITH ALL APPLICABLE CODES AND REGULATIONS GOVERNING THE WORK OR MATERIALS SUPPLIED.

CONTRACTOR SHALL PROTECT ALL EXISTING ROADS, CURBS/GUTTERS, TRAILS, TREES, LAWNS AND SITE ELEMENTS DURING PLANTING OPERATIONS. ANY DAMAGE TO SAME SHALL BE REPAIRED AT NO COST TO THE OWNER.

CONTRACTOR SHALL VERIFY ALIGNMENT AND LOCATION OF ALL UNDERGROUND AND ABOVE GRADE UTILITIES AND PROVIDE THE NECESSARY PROTECTION FOR SAME BEFORE CONSTRUCTION / MATERIAL INSTALLATION BEGINS (MINIMUM 10' - 0" CLEARANCE).

ALL UNDERGROUND UTILITIES SHALL BE LAID SO THAT TRENCHES DO NOT CUT THROUGH ROOT SYSTEMS OF ANY EXISTING TREES TO REMAIN.

EXISTING CONTOURS, TRAILS, VEGETATION, CURB/GUTTER AND OTHER EXISTING ELEMENTS BASED UPON INFORMATION SUPPLIED TO LANDSCAPE ARCHITECT BY OTHERS. CONTRACTOR SHALL VERIFY ANY AND ALL DISCREPANCIES PRIOR TO CONSTRUCTION AND NOTIFY LANDSCAPE ARCHITECT OF SAME.

THE ALIGNMENT AND GRADES OF THE PROPOSED WALKS, TRAILS AND/OR ROADWAYS ARE SUBJECT TO FIELD ADJUSTMENT REQUIRED TO CONFORM TO LOCALIZED TOPOGRAPHIC CONDITIONS AND TO MINIMIZE TREE REMOVAL AND GRADING. ANY CHANGE IN ALIGNMENT MUST BE APPROVED BY LANDSCAPE ARCHITECT.

LANDSCAPE INSTALLATION

COORDINATE THE PHASES OF CONSTRUCTION AND PLANTING INSTALLATION WITH OTHER CONTRACTORS WORKING ON SITE.

NATIVE SEED MIX SHALL BE INSTALLED PER MNDOT SPECS AT 35 LBS/ACRE. ALL SEEDED AREAS SHALL BE COVERED WITH MNDOT TYPE 1 MULCH IMMEDIATELY AFTER SEEDING.

WHERE SOD ABUTS HARD SURFACES, FINISHED GRADE OF SOD SHALL BE HELD 1" BELOW SURFACE ELEVATION OF HARD SURFACE.

SOD A 3' WIDE STRIP ALONG ALL NEW CURBS. SOD SHALL BE PLACED OVER 4" OF TOPSOIL AND SHALL HAVE STAGGERED JOINTS.

NO PLANTING WILL BE INSTALLED UNTIL COMPLETE GRADING AND CONSTRUCTION HAS BEEN COMPLETED IN THE IMMEDIATE AREA.

ALL PLANT MATERIAL SHALL COMPLY WITH THE LATEST EDITION OF THE AMERICAN STANDARD FOR NURSERY STOCK, AMERICAN ASSOCIATION OF NURSERYMEN. UNLESS NOTED OTHERWISE, ALL SHRUBS SHALL HAVE AT LEAST 5 CANES AT THE SPECIFIED MINIMUM SHRUB HEIGHT OR WIDTH. BOULEVARD AND OVERSTORY TREES SHALL BEGIN BRANCHING NO LOWER THAN 5' ABOVE FINISHED GRADE.

PLAN TAKES PRECEDENCE OVER PLANT SCHEDULE IF DISCREPANCIES IN QUANTITIES EXIST. SPECIFICATIONS TAKE PRECEDENCE OVER NOTES.

NO PLANT MATERIAL SUBSTITUTIONS WILL BE ACCEPTED UNLESS APPROVAL IS REQUESTED OF THE LANDSCAPE ARCHITECT BY THE LANDSCAPE CONTRACTOR PRIOR TO THE SUBMISSION OF A BID AND/OR QUOTATION.

ALL PROPOSED PLANTS SHALL BE LOCATED AND STAKED AS SHOWN ON PLAN. ADJUSTMENTS IN LOCATION OF PROPOSED PLANT MATERIALS MAY BE NEEDED IN FIELD. SHOULD AN ADJUSTMENT BE ADVISED, THE LANDSCAPE ARCHITECT MUST BE NOTIFIED.

ALL PLANT MATERIALS SHALL BE FERTILIZED UPON INSTALLATION WITH A 27-3-3 SLOW RELEASE FERTILIZER MIXED IN WITH THE PLANTING SOIL PER THE MANUFACTURER'S INSTRUCTIONS. PLANTS MAY BE TREATED FOR SUMMER AND FALL INSTALLATION WITH AN APPLICATION OF GRANULAR 27-3-3 AT 6 OZ PER 2.5" CALIPER PER TREE AND 3 OZ PER SHRUB WITH AN ADDITIONAL APPLICATION OF 27-3-3 THE FOLLOWING SPRING IN THE TREE SAUCER.

ALL PLANTS TO BE INSTALLED AS PER PLANTING DETAILS. REMOVE ALL FLAGGING AND LABELS FROM PLANTS.

WRAPPING MATERIAL SHALL BE CORRUGATED PVC PIPING 1" GREATER IN CALIPER THAN THE TREE BEING PROTECTED OR QUALITY, HEAVY, WATERPROOF CREPE PAPER MANUFACTURED FOR THIS PURPOSE. WRAP ALL DECIDUOUS TREES PLANTED IN THE FALL PRIOR TO 12-1 AND REMOVE ALL WRAPPING AFTER 5-1.

ALL SHRUB BED MASSINGS NOT SHOWN TO RECEIVE ROCK MULCH SHALL RECEIVE 3" DEEP SHREDDED HARDWOOD MULCH AND FIBER MAT WEED BARRIER.

ALL TREES TO RECEIVE 4" DEEP SHREDDED HARDWOOD MULCH WITH NO MULCH IN DIRECT CONTACT WITH TREE TRUNK.

SPREAD GRANULAR PRE EMERGENT HERBICIDE (PREEN OR EQUAL) PER MANUFACTURER'S RECOMMENDATIONS UNDER ALL MULCHED AREAS.

IF THE LANDSCAPE CONTRACTOR IS CONCERNED OR PERCEIVES ANY DEFICIENCIES IN THE PLANT SELECTIONS, SOIL CONDITIONS OR ANY OTHER SITE CONDITION WHICH MIGHT NEGATIVELY AFFECT PLANT ESTABLISHMENT, SURVIVAL OR GUARANTEE, HE MUST BRING THESE DEFICIENCIES TO THE ATTENTION OF THE LANDSCAPE ARCHITECT PRIOR TO PROCUREMENT AND/OR INSTALLATION.

CONTRACTOR SHALL SUBMIT A WRITTEN REQUEST FOR THE OWNER ACCEPTANCE INSPECTION OF ALL LANDSCAPE AND SITE IMPROVEMENTS.

CONTRACTOR IS RESPONSIBLE FOR ON-GOING MAINTENANCE OF ALL NEWLY INSTALLED MATERIALS UNTIL TIME OF OWNER ACCEPTANCE. ANY ACTS OF VANDALISM OR DAMAGE WHICH MAY OCCUR PRIOR TO OWNER ACCEPTANCE SHALL BE THE RESPONSIBILITY OF THE CONTRACTOR. CONTRACTOR SHALL PROVIDE THE OWNER WITH A MAINTENANCE PROGRAM INCLUDING, BUT NOT NECESSARILY LIMITED TO, PRUNING, FERTILIZATION AND DISEASE/PEST CONTROL.

CONTRACTOR SHALL GUARANTEE NEW PLANT MATERIAL THROUGH ONE CALENDAR YEAR FROM THE DATE OF OWNER ACCEPTANCE.

WARRANTY (ONE FULL GROWING SEASON) FOR LANDSCAPE MATERIALS SHALL BEGIN ON THE DATE OF ACCEPTANCE BY THE LANDSCAPE ARCHITECT AFTER THE COMPLETION OF PLANTING OF ALL LANDSCAPE MATERIALS. NO PARTIAL ACCEPTANCE WILL BE CONSIDERED.

UNLESS NOTED OTHERWISE THE APPROPRIATE DATES FOR SPRING PLANT MATERIAL INSTALLATION AND SEED/SOD PLACEMENT IS FROM THE TIME GROUND HAS THAWED TO JUNE 15.

FALL SODDING IS GENERALLY ACCEPTABLE FROM AUGUST 15 - NOVEMBER 1. FALL DECIDUOUS PLANTING FROM THE FIRST FROST UNTIL NOVEMBER 15. PLANTING OUTSIDE THESE DATES IS NOT RECOMMENDED. ANY ADJUSTMENT MUST BE APPROVED IN WRITING BY THE LANDSCAPE ARCHITECT.

LANDSCAPE CONTRACTOR SHALL ESTABLISH TO HIS SATISFACTION THAT SOIL AND COMPACTION CONDITIONS ARE ADEQUATE TO ALLOW FOR PROPER DRAINAGE AT AND AROUND THE BUILDING SITE.

CROW RIVER HEIGHTS WEST FUTURE ADD.

HANOVER, MN

BACKES COMPANIES
11413 ASHBURY CIRCLE N.
CHAMPLIN, MN 55316
PHONE: (612) 369-7750
FAX (612) 566-1525

LOUCKS
PLANNING
CIVIL ENGINEERING
LAND SURVEYING
LANDSCAPE ARCHITECTURE
ENVIRONMENTAL
7200 Hemlock Lane, Suite 300
Maple Grove, MN 55369
763.424.5505
www.loucksinc.com

CADD QUALIFICATION
CADD files prepared by the Consultant for this project are instruments of the Consultant professional services for use solely with respect to this project. These CADD files shall not be used on other projects, for additions to this project, or for completion of this project by others without written approval by the Consultant. With the Consultant's approval, others may be permitted to obtain copies of the CADD drawing files for information and reference only. All intentional or unintentional revisions, additions, or deletions to these CADD files shall be made at the full risk of that party making such revisions, additions or deletions and that party shall hold harmless and indemnify the Consultant from any & all responsibilities, claims, and liabilities.

SUBMITTAL/REVISIONS
04/20/18 CITY SUBMITTAL

PROFESSIONAL SIGNATURE
I hereby certify that this plan, specification or report was prepared by me or under my direct supervision and that I am a duly Licensed Professional Engineer under the laws of the State of Minnesota.

PRELIMINARY

Todd W. McLouth - PE
License No. 20383
Date

QUALITY CONTROL

Loucks Project No.	16101A
Project Lead	TWM
Drawn By	ZHW
Checked By	TWM
Review Date	04/02/18

SHEET INDEX

C0-1	COVER SHEET
C1-1	EXISTING CONDITIONS
C1-2	PRELIMINARY PLAT
C2-0 - C2-2	SITE PLAN
C3-0 - C3-2	GRADING PLAN
C3-3 - C3-5	SWPPP PLAN & NOTES
C4-0 - C4-2	UTILITY PLAN
C8-1 - C8-2	DETAILS
L0-1 - L0-3	TREE PRESERVATION
L0-4	TREE INVENTORY
L1-1 - L1-2	LANDSCAPE PLANS
L2-1	LANDSCAPE DETAILS

LANDSCAPE DETAILS

L2-1

Plotted: 04 /18 / 2018 10:12 AM W:\2016\16101A\CADD DATA\LANDSCAPE_dwg Sheet Files - 4-6 Addition\L16101A L1-1 Landscape Plan