DOWNTOWN PARKING LOT IMPROVEMENTS

CITY OF HANOVER, MINNESOTA

EXISTING PLAN SYMBOLS

- PROPERTY LINES/RIGHT-OF-WAY
- UTILITY EASEMENT
- TREE LINE
- SIGN
- DECIDUOUS TREE
- SHRUB
- CONIFEROUS TREE

EXISTING UTILITY SYMBOLS

- FIBER OPTIC CABLE — F/O
- UNDERGROUND TELEPHONE — UGT
- GAS LINE — G
- UNDERGROUND CABLE — CND
- CABLE TV — CTV
- OVERHEAD COMMUNICATIONS LINE — OH
- UNDERGROUND POWER — UGE
- OVERHEAD POWER — OHE
- UNDERGROUND ELECTRIC — UGE
- OVERHEAD TELEPHONE — OHT
- WATER MAIN
- SANITARY SEWER
- STORM SEWER
- CATV VAULT — TV
- POWER POLE
- ELECTRIC BOX — EB
- CATCH BASIN
- STORM APRON
- STORM SEWER MANHOLE — ST
- GATE VALVE
- HYDRANT
- SANITARY SEWER MANHOLE — S

CONSTRUCTION PLAN FOR SURFACE AND STORM SEWER IMPROVEMENTS

LOCATED ON 11234 RIVER ROAD NE

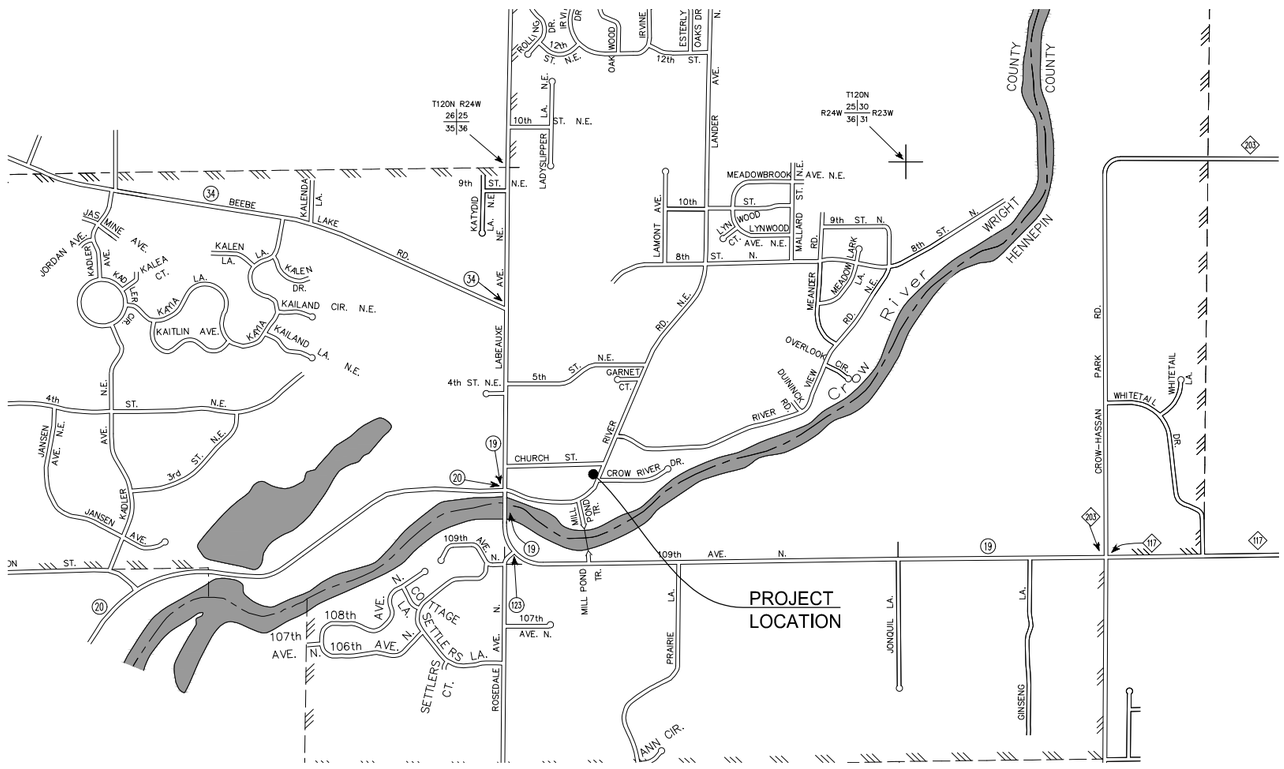

PROJECT LOCATION MAP

GOVERNING SPECIFICATIONS

THE 2018 EDITION OF THE MINNESOTA DEPARTMENT OF TRANSPORTATION "STANDARD SPECIFICATIONS FOR CONSTRUCTION" SHALL GOVERN.

ALL TRAFFIC CONTROL DEVICES SHALL CONFORM TO THE LATEST EDITION OF THE MINNESOTA MANUAL ON UNIFORM TRAFFIC CONTROL DEVICES, INCLUDING THE LATEST FIELD MANUAL FOR TEMPORARY TRAFFIC CONTROL ZONE LAYOUTS.

PLAN SET INDEX

SHEET NO.	DESCRIPTION
G0.01	TITLE SHEET
C0.01	DETAILS
C3.01	REMOVALS
C6.01	SITE PLAN & CONSTRUCTION

THIS PLAN SET CONTAINS 4 SHEETS

THIS PLAN SET HAS BEEN PREPARED FOR:

CITY OF HANOVER
11250 5TH STREET NE
HANOVER, MN 55341
(763) 497-3777

ALL APPLICABLE FEDERAL, STATE, AND LOCAL LAWS AND ORDINANCES WILL BE COMPLIED WITH IN THE CONSTRUCTION OF THIS PROJECT.

WSB

I HEREBY CERTIFY THAT THIS PLAN WAS PREPARED BY ME OR UNDER MY DIRECT SUPERVISION, AND THAT I AM A DULY LICENSED PROFESSIONAL ENGINEER UNDER THE LAWS OF THE STATE OF MINNESOTA.

JUSTIN G. MESSNER, PE

DATE: 5/11/18 LICENSE NUMBER: 45857

EXCAVATION NOTICE SYSTEM

A CALL TO GOPHER STATE ONE (651-454-0002) IS REQUIRED A MINIMUM OF 48 HOURS PRIOR TO PERFORMING ANY EXCAVATION.

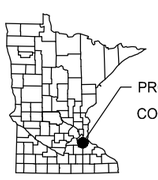

PROJECT LOCATION

COUNTY: WRIGHT

SECT 36, TWP 120N, RNG 24W

N

0 1000 2000
SCALE IN FEET

UTILITY INFORMATION

THE SUBSURFACE UTILITY INFORMATION IN THIS PLAN IS UTILITY QUALITY LEVEL D. THIS UTILITY QUALITY LEVEL WAS DETERMINED ACCORDING TO THE GUIDELINES OF CI/ASCE 38-02, ENTITLED "STANDARD GUIDELINES FOR THE COLLECTION AND DEPICTION OF EXISTING SUBSURFACE UTILITY DATA."

GOPHER ONE CALL TICKET NUMBER: 181215865

PLAN REVISIONS		
DATE	SHEET NO.	APPROVED BY

WSB PROJ. NO. 011753-000

SHEET G0.01

K:\011753-000\Cad\Plan\011753-000 C-TITL.dwg 5/14/2018 10:43:08 PM

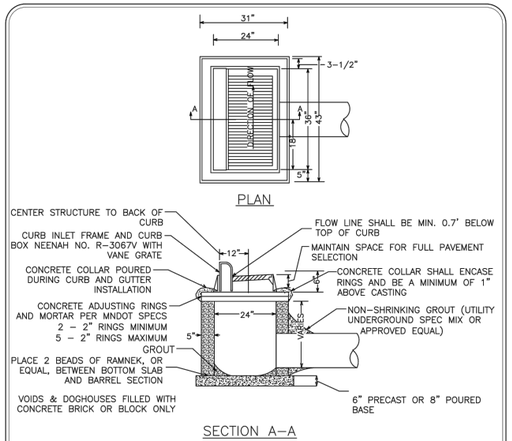

NOTES:
1. REINFORCING TO CONSIST OF #4 BARS @ 8" O.C., 4' MINIMUM LENGTH, EACH SIDE OF CASTING
2. GROUT BOTTOM TO DRAIN TO CENTER
3. PIPE CUT-OUTS TO BE LOCATED WHERE REQUIRED
4. INLET PROTECTION TO BE INSTALLED IN CATCH BASIN AND MAINTAINED AS DIRECTED BY THE ENGINEER
5. MORTAR SHALL MEET ASTM C270 AND ASTM C387 AND MNDOT SPECIFICATION 2506.2B

Standard Plate Library
City of Hanover

Title: **Standard Catch Basin**

Date: 03-18 | Plate No. STO - 01
Revised:

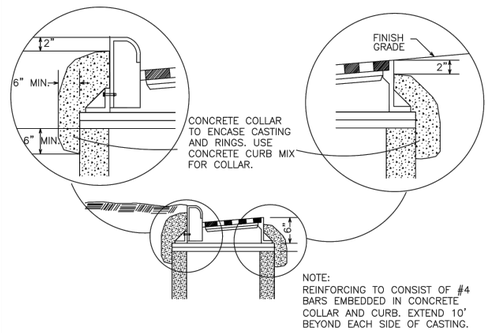

NOTE:
REINFORCING TO CONSIST OF #4 BARS EMBEDDED IN CONCRETE COLLAR AND CURB. EXTEND 10' BEYOND EACH SIDE OF CASTING.

Standard Plate Library
City of Hanover

Title: **Concrete Encasement for Catch Basin Castings**

Date: 01-16 | Plate No. STO - 06
Revised:

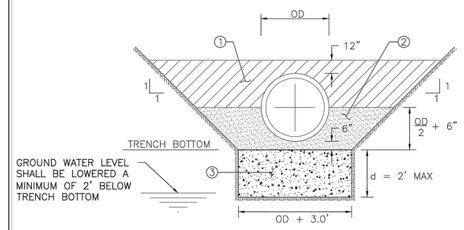

NOTES:
1. SELECTED MATERIAL (MNDOT SPEC 2451.3D) (INCIDENTAL)
2. GRANULAR PIPE BEDDING MATERIAL (MNDOT SPEC 3149.2F) (INCIDENTAL)
3. 1½" CLEAR AGGREGATE BEDDING. TO BE USED ONLY IN AREAS AS DIRECTED BY ENGINEER. (NO PAYMENT WILL BE MADE WITHOUT PRIOR APPROVAL FROM THE ENGINEER)

Standard Plate Library
City of Hanover

Title: **RCP Pipe Bedding Detail**

Date: 01-16 | Plate No. STO - 07
Revised:

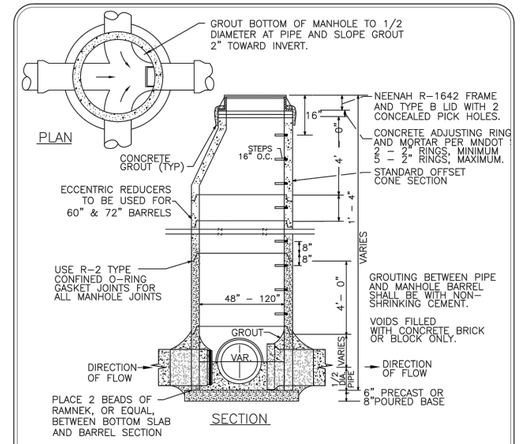

NOTES:
1. MANHOLE STEPS SHALL BE CAST ALUMINUM OR MA INDUSTRY WITH VINYL COATING OR APPROVED EQUIVALENT AND SHALL BE LOCATED ON THE DOWN STREAM SIDE OF THE MANHOLE
2. STEPS SHALL BE PLACED SO THAT THE OFFSET VERTICAL PORTION OF THE CONE IS FACING DOWN STREAM
3. MANHOLE COVER SHALL BE CAST WITH THE WORDS "STORM SEWER"
4. THE INITIAL AND FINAL RAISING OF CASTINGS SHALL BE CONSIDERED INCIDENTAL TO THE PROJECT
5. MAXIMUM DEPTH FROM TOP OF CASTING TO FIRST STEP SHALL NOT BE MORE THAN 16"
6. STEPS SHALL ALIGN WITH THE OPENING TO PROVIDE ACCESS TO THE MANHOLE
7. MORTAR SHALL MEET ASTM C270 AND ASTM C387 AND MNDOT SPECIFICATION 2506.2B

Standard Plate Library
City of Hanover

Title: **Storm Sewer Junction Manhole**

Date: 03-18 | Plate No. STO - 08
Revised:

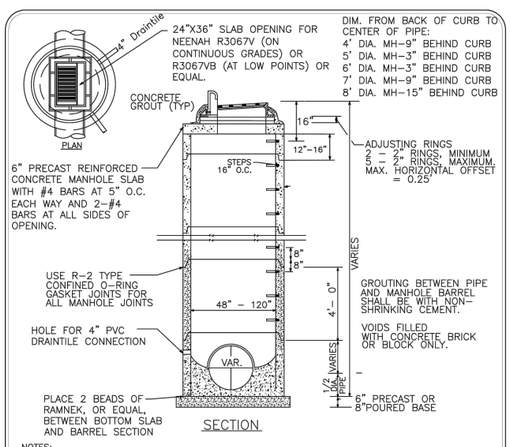

NOTES:
1. MANHOLE STEPS SHALL BE CAST ALUMINUM OR MA INDUSTRY WITH VINYL COATING OR APPROVED EQUIVALENT AND SHALL BE LOCATED ON THE DOWN STREAM SIDE OF THE MANHOLE
2. STEPS SHALL BE PLACED SO THAT THE OFFSET VERTICAL PORTION OF THE CONE IS FACING DOWN STREAM
3. MANHOLE COVER SHALL BE CAST WITH THE WORDS "STORM SEWER"
4. THE INITIAL AND FINAL RAISING OF CASTINGS SHALL BE CONSIDERED INCIDENTAL TO THE PROJECT
5. MAXIMUM DEPTH FROM TOP OF CASTING TO FIRST STEP SHALL NOT BE MORE THAN 16"
6. STEPS SHALL ALIGN WITH THE OPENING TO PROVIDE ACCESS TO THE MANHOLE
7. TOP BARREL SECTION BELOW TOP SLAB TO HAVE FLAT TOP EDGE SEALED WITH 2 BEADS OF RAMNEK OR EQUAL.

Standard Plate Library
City of Hanover

Title: **Catch Basin Manhole Type II**

Date: 01-16 | Plate No. STO - 10
Revised:

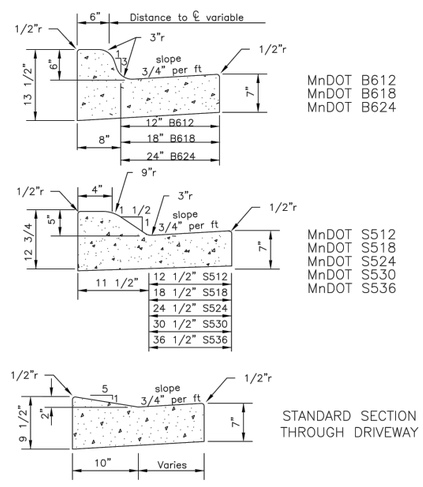

Standard Plate Library
City of Hanover

Title: **Curb & Gutter**

Date: 01-16 | Plate No. STR - 03
Revised:

Hanover

WSB

WSB PROJECT NO.: 011753-000

SCALE:	DESIGN BY:
AS SHOWN	DJE
PLAN BY:	CHECK BY:
DJE	JGM

REVISIONS

NO.	DATE	DESCRIPTION

I HEREBY CERTIFY THAT THIS PLAN, SPECIFICATION, OR REPORT WAS PREPARED BY ME OR UNDER MY DIRECT SUPERVISION AND THAT I AM A DULY LICENSED PROFESSIONAL ENGINEER UNDER THE LAWS OF THE STATE OF MINNESOTA.

DRAFT

JUSTIN G. MESSNER, PE

DATE: 5/11/18 LIC. NO. 45857

PARKING LOT IMPROVEMENTS FOR THE CITY OF HANOVER, MINNESOTA

DETAILS

SHEET C0.01

K:\011753-000\Cad\Plan\011753-000 C-DETL-PLAN.dwg 5/14/2018 10:43:15 PM

DOWNTOWN PARKING LOT

NOTES:
1. CONTRACTOR TO PROTECT EXISTING TREES AND LANDSCAPING (INCIDENTAL).
2. ALL REMOVALS WILL BE MARKED IN THE FIELD BY THE ENGINEER.

LEGEND:

- REMOVE BITUMINOUS PAVEMENT
- REMOVE CONCRETE DRIVEWAY PAVEMENT
- REMOVE CONCRETE WALK
- REMOVE CURB & GUTTER
- SAWCUT BITUMINOUS PAVEMENT

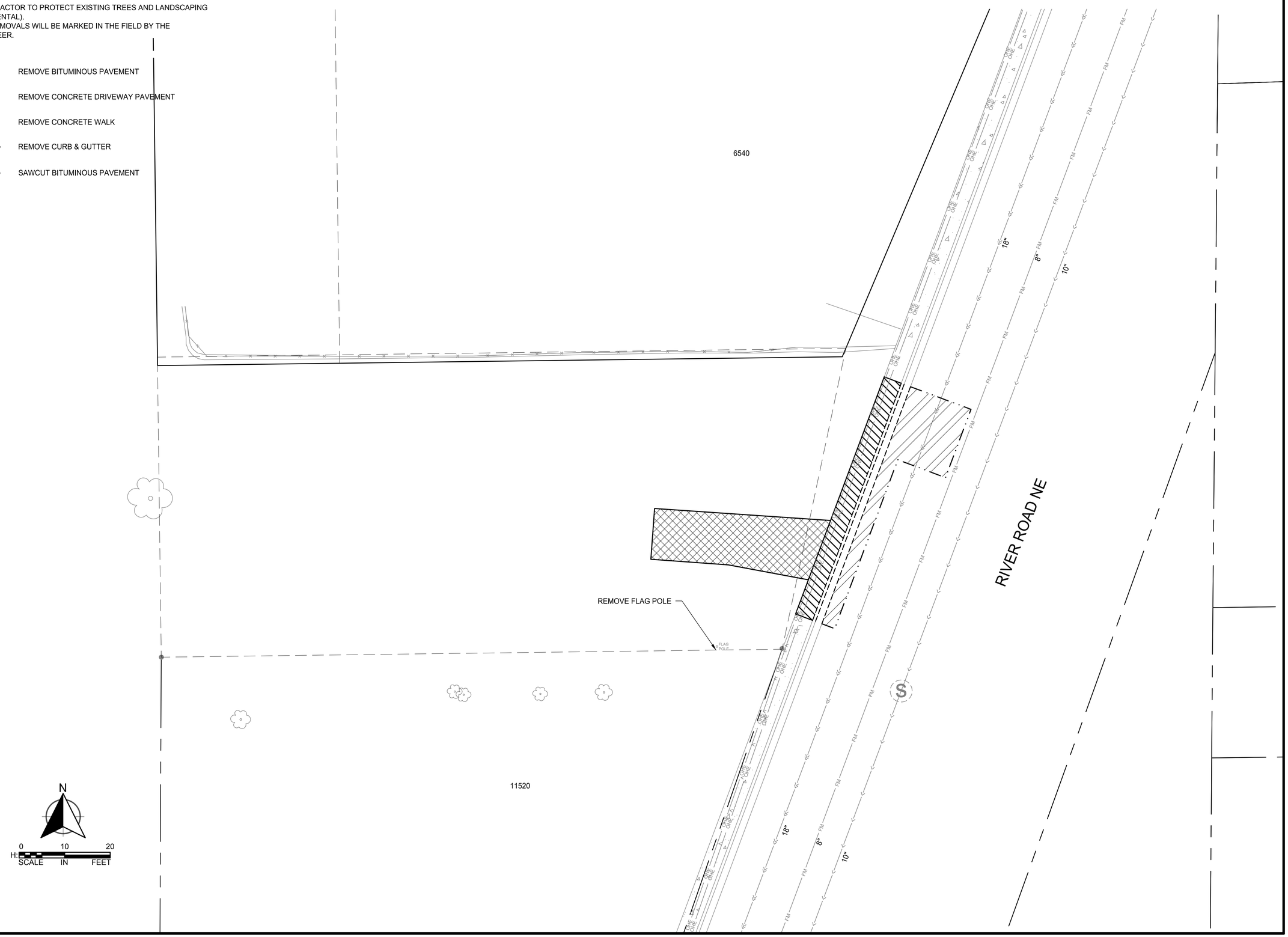

K:\011753-000\Cad\Plan\011753-000 C-DEMO-PLAN.dwg 5/14/2018 10:43:19 PM

WSB PROJECT NO.: 011753-000

SCALE:	DESIGN BY:
AS SHOWN	DJE
PLAN BY:	CHECK BY:
DJE	JGM

REVISIONS

NO.	DATE	DESCRIPTION

I HEREBY CERTIFY THAT THIS PLAN, SPECIFICATION, OR REPORT WAS PREPARED BY ME OR UNDER MY DIRECT SUPERVISION AND THAT I AM A DULY LICENSED PROFESSIONAL ENGINEER UNDER THE LAWS OF THE STATE OF MINNESOTA.

DRAFT

JUSTIN G. MESSNER, PE

DATE: 5/11/18 LIC. NO: 45857

PARKING LOT IMPROVEMENTS FOR THE CITY OF HANOVER, MINNESOTA

REMOVALS

SHEET C3.01

DOWNTOWN PARKING LOT

NOTES:
1. ALL DIMENSIONS ARE TO BACK OF CURB UNLESS OTHERWISE NOTED.
2. CONTRACTOR TO PROTECT EXISTING TREES AND LANDSCAPING (INCIDENTAL).
3. ADA COMPLIANT PEDESTRIAN CURB RAMPS SHALL BE INSTALLED AT DRIVEWAY CROSSINGS (INCIDENTAL).

LEGEND:

- BITUMINOUS PAVEMENT
- CONCRETE WALK
- DRAINAGE DIRECTION
- INSTALL PINE TREE (SEE SPEC)

STORM STRUCTURES	
5000	TC: 912.22
	INV: 906.96 W
	INV: 905.96 N
	INV: 905.96 S
5001	TC: 912.08
	INV: 907.05 E
	INV: 907.05 SW
5002	TC: 911.03
	INV: 907.53 NE

TYPICAL PAVEMENT SECTION

4" TYPE SP 9.5 BITUMINOUS WEARING COURSE (SPWEA240C)

8" AGGREGATE BASE, CLASS 5 (100% CRUSHED ROCK) (INCIDENTAL)

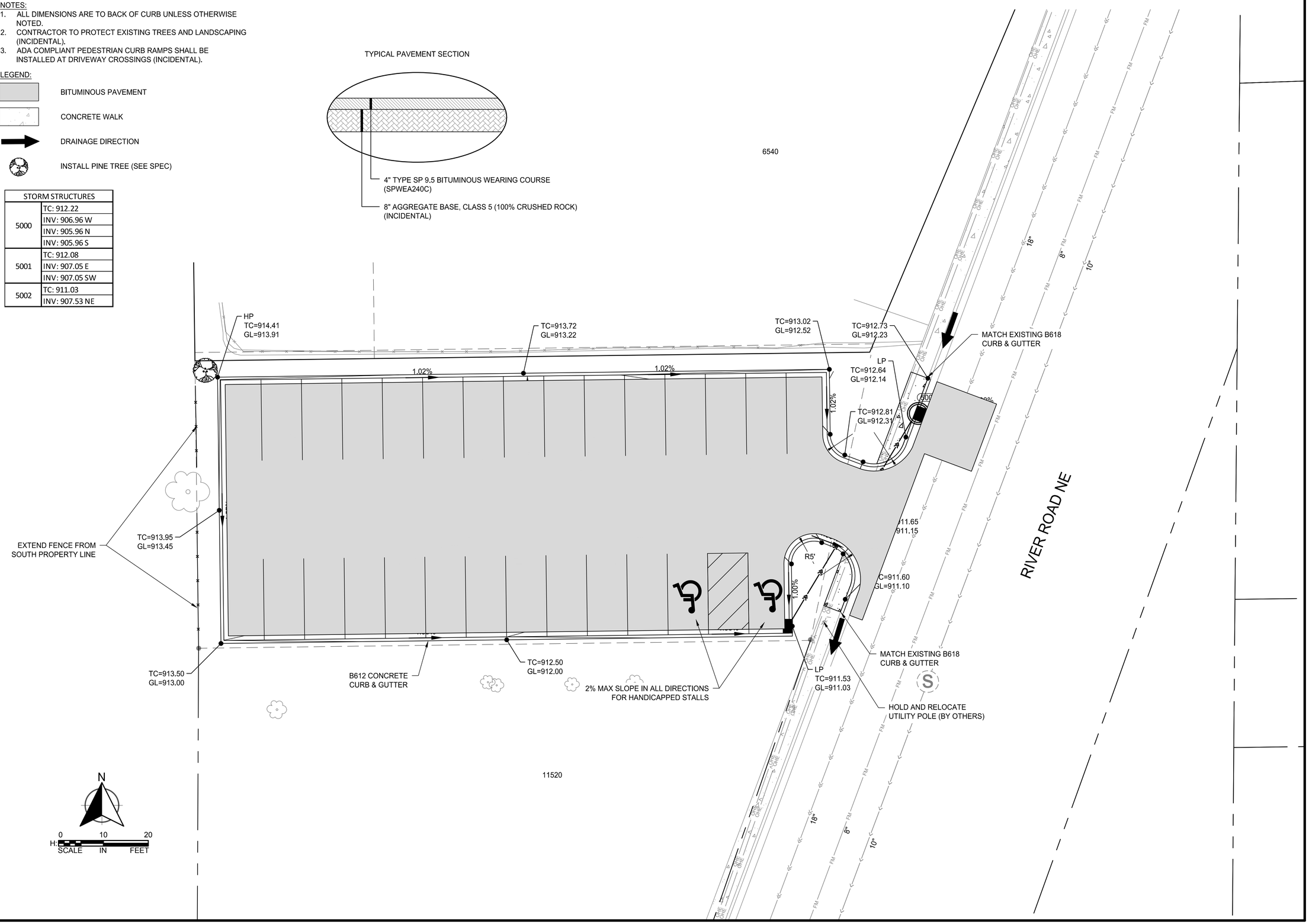

K:\011753-000\Cad\Plan\011753-000 C-SITE-PLAN.dwg 5/14/2018 10:43:32 PM

WSB PROJECT NO.:
011753-000

SCALE:	DESIGN BY:
AS SHOWN	DJE
PLAN BY:	CHECK BY:
DJE	JGM

REVISIONS

NO.	DATE	DESCRIPTION

I HEREBY CERTIFY THAT THIS PLAN, SPECIFICATION, OR REPORT WAS PREPARED BY ME OR UNDER MY DIRECT SUPERVISION AND THAT I AM A DULY LICENSED PROFESSIONAL ENGINEER UNDER THE LAWS OF THE STATE OF MINNESOTA.

DRAFT

JUSTIN G. MESSNER, PE

DATE: 5/11/18 LIC. NO. 45857

PARKING LOT IMPROVEMENTS FOR THE CITY OF HANOVER, MINNESOTA

SITE & UTILITY PLAN

SHEET
C6.01